Delta Standard Compact Drive MS300 Series User Manual

www.deltaww.com

Smarter. Greener. Together.

Smarter. Greener. Together.

Industrial Automation Headquarters

Delta Electronics, Inc.
Taoyuan Technology Center
18 Xinglong Road, Taoyuan District,
Taoyuan City 33068, Taiwan (R.O.C.)
TEL: 886-3-362-6301 / FAX: 886-3-371-6301

Asia

Delta Electronics (Jiangsu) Ltd.
Wujiang Plant 3
1688 Jiangxing East Road,
Wujiang Economic Development Zone
Wujiang City, Jiang Su Province, P.R.C. 215200
TEL: 86-512-6340-3008 / FAX: 86-769-6340-7290

Delta Greentech (China) Co., Ltd.
238 Min-Xia Road, Pudong District,
ShangHai, P.R.C. 201209
TEL: 86-21-58635678 / FAX: 86-21-58630003

Delta Electronics (Japan), Inc.
Tokyo Office
2-1-14 Minato-ku Shibadaimon,
Tokyo 105-0012, Japan
TEL: 81-3-5733-1111 / FAX: 81-3-5733-1211

Delta Electronics (Korea), Inc.
1511, Byucksan Digital Valley 6-cha, Gasan-dong,
Geumcheon-gu, Seoul, Korea, 153-704
TEL: 82-2-515-5303 / FAX: 82-2-515-5302

Delta Electronics Int'l (S) Pte Ltd.
4 Kaki Bukit Ave 1, #05-05, Singapore 417939
TEL: 65-6747-5155 / FAX: 65-6744-9228

Delta Electronics (India) Pvt. Ltd.
Plot No 43 Sector 35, HSIIDC
Gurgaon, PIN 122001, Haryana, India
TEL : 91-124-4874900 / FAX : 91-124-4874945

Americas

Delta Products Corporation (USA)
Raleigh Office
P.O. Box 12173,5101 Davis Drive,
Research Triangle Park, NC 27709, U.S.A.
TEL: 1-919-767-3800 / FAX: 1-919-767-8080

Delta Greentech (Brasil) S.A.
Sao Paulo Office
Rua Itapeva, 26 - 3° andar Edificio Itapeva One-Bela Vista
01332-000-São Paulo-SP-Brazil
TEL: 55 11 3568-3855 / FAX: 55 11 3568-3865

Europe

Delta Electronics (Netherlands) B.V.
Eindhoven Office
De Witbogt 20, 5652 AG Eindhoven, The Netherlands
TEL: +31 (0)40-8003800 / FAX: +31 (0)40-8003898

*We reserve the right to change the information in this user manual without prior notice.

5014014800-MSE0-201609

PLEASE READ PRIOR TO INSTALLATION FOR SAFETY.

DANGER

- ☑ AC input power must be disconnected before any wiring to the AC motor drive is made.
- ☑ Even if the power has been turned off, a charge may still remain in the DC-link capacitors with hazardous voltages before the POWER LED is OFF. Please do not touch the internal circuit and components.
- ☑ There are highly sensitive MOS components on the printed circuit boards. These components are especially sensitive to static electricity. Please do not touch these components or the circuit boards before taking anti-static measures.
- ☑ Never reassemble internal components or wiring.
- ☑ Ground the AC motor drive using the ground terminal. The grounding method must comply with the laws of the country where the AC motor drive is to be installed.
- ☑ DO NOT install the AC motor drive in a place subjected to high temperature, direct sunlight and inflammables.

CAUTION

- ☑ Never connect the AC motor drive output terminals U/T1, V/T2 and W/T3 directly to the AC mains circuit power supply.
- ☑ The rated voltage of the AC motor drive must be ≤ 115V for 110V models, ≤ 240V for 230V models, and ≤ 480V for 460V models.
- ☑ Only qualified persons are allowed to install, wire and maintain the AC motor drives.
- ☑ Even if the 3-phase AC motor is stop, a charge may still remain in the main circuit terminals of the AC motor drive with hazardous voltages.
- ☑ If the AC motor drive is stored in no charge condition for more than 3 months, the ambient temperature should not be higher than 30°C. Storage longer than one year is not recommended, it could result in the degradation of the electrolytic capacitors.
- ☑ Pay attention to the following when transporting and installing this package (including wooden crate, wood stave and carton box)
  1. If you need to sterilize, deform the wooden crate or carton box, please do not use steamed smoking sterilization or you will damage the VFD.
  2. Please use other ways to sterilize or deform.
  3. You may use high temperature to sterilize or deform. Leave the packaging materials in an environment of over 56°C for 30 minutes.
- ☑ Type of electrical supply system (3WYE) to which the drive shall be connected.

NOTE

- For a detailed explanation of the product specification, the cover or the safety shields will be disassembled, as described in graphic mode. As for the product in operation, please install the top cover and wiring correctly according to the provisions. Refer to the manual operation to ensure safety.
- The figures in this instruction are only for reference, they may be slightly different from the one you have, but it will not affect your customer rights.
- The content of this manual may be revised without prior notice. Please consult our distributors or download the latest version at http://www.deltaww.com/services/DownloadCenter2.aspx?secID=8&pid=2&tid=0&CID=06&itemID=060101&typeID=1&downloadID=&title=&dataType=&check=0&hl=en-US

Table of Contents

CHAPTER 1 INTRODUCTION 1-1

1-1 Nameplate Information.....1-2
1-2 Model Name.....1-3
1-3 Serial Number.....1-3
1-4 RFI Jumper.....1-4

CHAPTER 2 DIMENSION 2-1

Frame A.....2-1
Frame B.....2-2
Frame C.....2-3
Frame D.....2-4
Frame E.....2-5
Frame F.....2-6
Digital Keypad.....2-7

CHAPTER 3 INSTALLATION 3-1

CHAPTER 4 WIRING 4-1

4-1 Wiring.....4-3
4-2 System Wiring Diagram.....4-6

CHAPTER 5 MAIN CIRCUIT TERMINALS 5-1

5-1 Main Circuit Diagram.....5-4
5-2 Main Circuit Terminals.....5-5
Frame A.....5-6
Frame B.....5-7
Frame C.....5-8
Frame D.....5-9
Frame E.....5-10
Frame F.....5-11

CHPATER 6 CONTROL TERMINALS 6-1

CHAPTER 7 OPTIONAL ACCESSORIES 7-1

7-1 All Brake Resistors and Brake Units Used in AC Motor Drives.....7-2
7-2 Non-fuse Circuit Breaker.....7-5
7-3 Fuse Specification Chart 7-7
7-4 AC/DC Reactor.....7-9
7-5 Zero Phase Reactor.....7-23
7-6 EMC Filter.....7-26
7-7 EMC Shield Plate.....7-30
7-8 Capacitive Filter.....7-33

7-9 Conduit Box....7-35
7-10 Fan Kit....7-43
7-11 Keypad Panel Mounting 7-44
7-12 DIN-Rail Mounting....7-45
7-13 Mounting Adapter Plate....7-47

CHAPTER 8 OPTION CARDS....8-1

8-1 Option Card Installation....8-2
8-2 CMM-MOD01 Modbus/TCP Option Card....8-7
8-3 CMM-PD01 PROFIBUS Option Card....8-10
8-4 CMM-DN01 DeviceNet Option Card....8-12
8-5 CMM-EIP01 Modbus TCP/EtherNet IP Option Card....8-15
8-6 CMM-COP01 CANopen Option Card....8-18
8-7 EMM-BPS01 Back-up Power Supply Card....8-20

CHAPTER 9 SPECIFICATION....9-1

9-1 115V Series....9-2
9-2 230V Series....9-3
9-3 460V Series....9-5
9-4 Environment for Operation, Storage and Transportation....9-8
9-5 Derating of Ambient Temperature and Altitude....9-9

CHAPTER 10 DIGITAL KEYPAD 10-1

CHAPTER 11 SUMMARPY OF PARAMETERS SETTINGS....11-1

CHAPTER 12 DESCRIPTION OF PARAMETER SETTINGS 12-00-1

12-1 Description of Parameter Settings....12-00-1
12-2 Adjustment & Application.... 12.2-1

CHAPTER 13 WARNING CODES....13-1

CHAPTER 14 ERROR CODES 14-1

CHAPTER 15 CANOPEN OVERVIEW....15-1

CHAPTER 16 PLC FUNCTION APPLICATIONS 16-1

CHAPTER 17 SAFETY TORQUE OFF FUNCTION....17-1

17-1 The Drive Safe Function Failure Rate....17-2
17-2 Safe Torque Off Terminal Function Description....17-2
17-3 Wiring Diagram....17-3
17-4 Parameter....17-4
17-5 Operating Sequence Description....17-4
17-6 Error Code....17-6

Application	Control Board: V 1.0

[This page intentionally left blank]

Chapter 1 Introduction

1-1 Nameplate Information

1-2 Model Name

1-3 Serial Number

1-4 RFI Jumper

After receiving the AC motor drive, please check for the following:

1. Please inspect the unit after unpacking to ensure it was not damaged during shipment. Make sure that the part number printed on the package corresponds with the part number indicated on the nameplate.
2. Make sure that the mains voltage is within the range as indicated on the nameplate. Please install the AC motor drive according to this manual.
3. Before applying the power, please make sure that all devices, including mains power, motor, control board and digital keypad, are connected correctly.
4. When wiring the AC motor drive, please make sure that the wiring of input terminals “R/L1, S/L2, T/L3” and output terminals”U/T1, V/T2, W/T3” are correct to prevent damage to the drive.
5. When power is applied, select the language and set parameters via the digital keypad (KPMS-LE01). When executing a trial run, please begin with a low speed and then gradually increase the speed until the desired speed is reached.

1-1 Nameplate Information

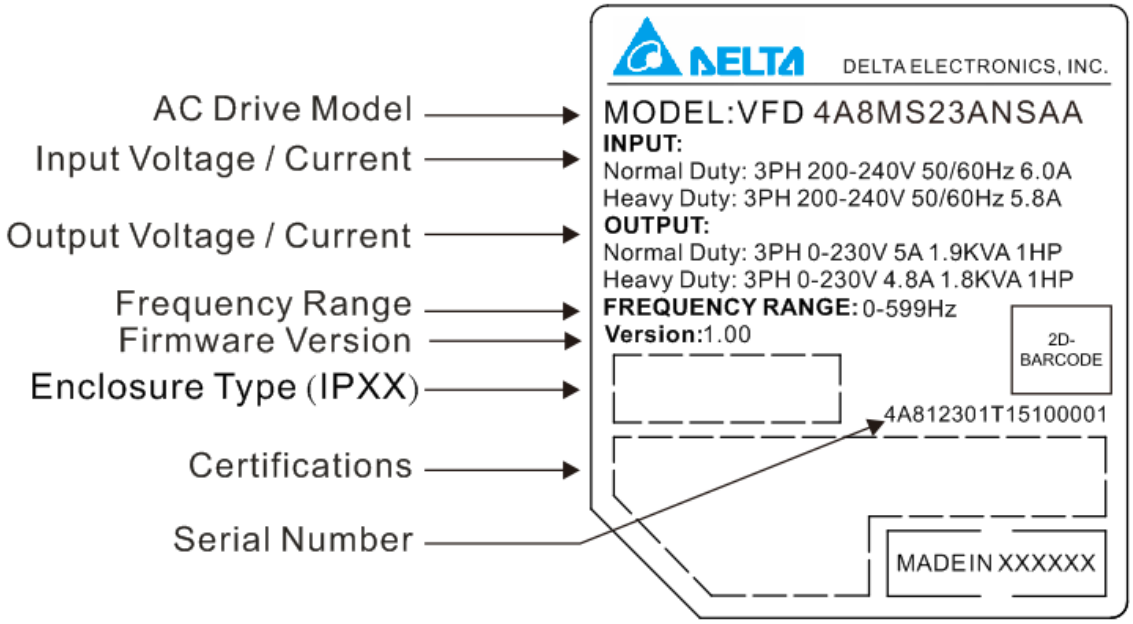

1-2 Model Name

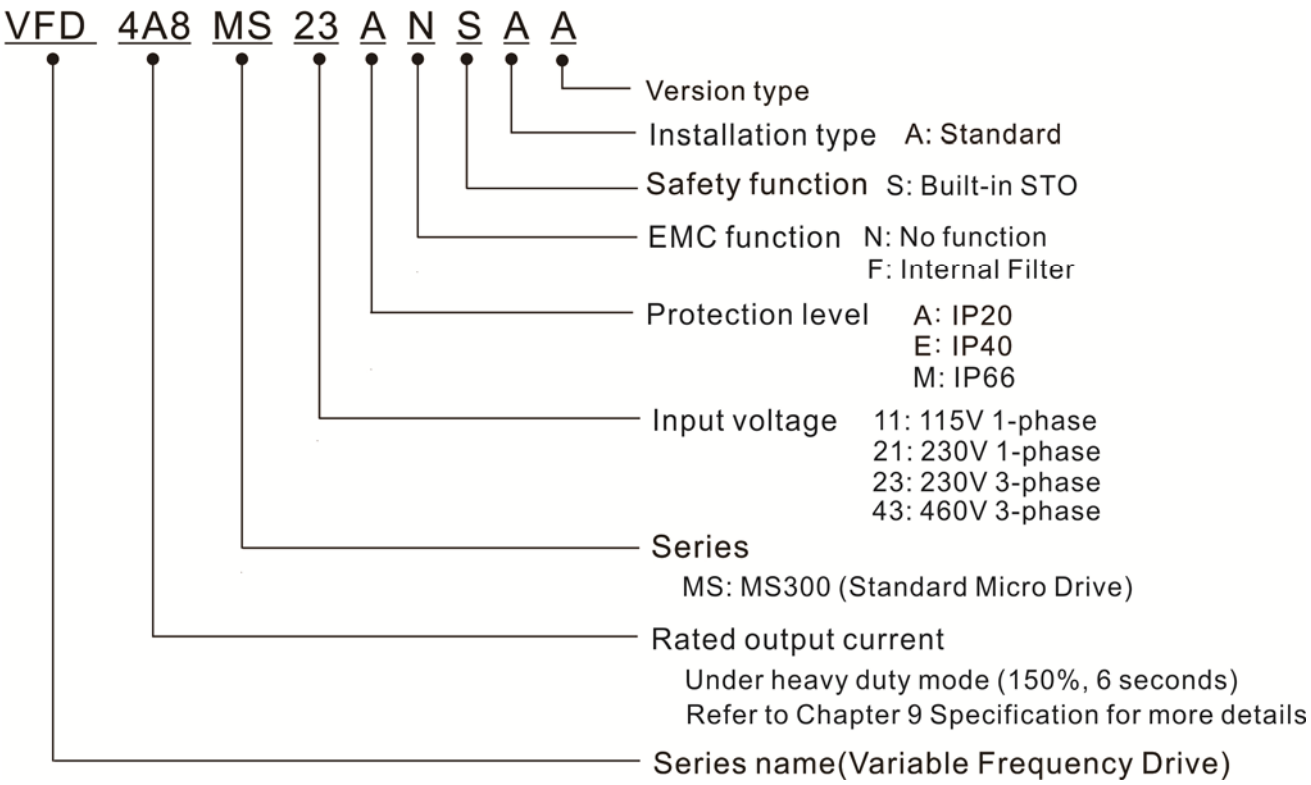

1-3 Serial Number

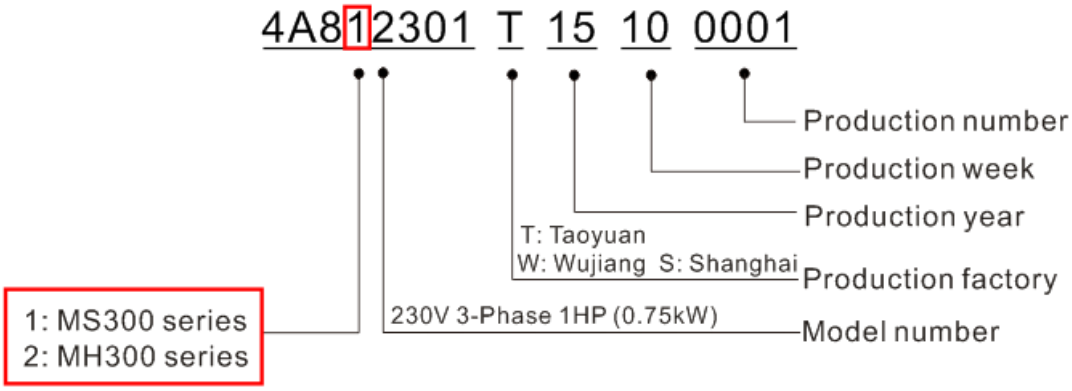

1-4 RFI Jumper

(1) In the drive there are Varistor / MOVs, which are connected from phase to phase and from phase to ground, to protect the drive against mains surges or voltage spikes.
Because the Varistors / MOVs from phase to ground are connected to ground via the RFI jumper, the protection will be ineffective when the RFI jumper is removed.

(2) In the models with built-in EMC filter the RFI jumper connects the filer capacitors to ground to form a return path for high frequency noise to isolate the noise from contaminating the mains power.
Removing the RFI jumper strongly reduces the effect of the buiolt-in EMC filter.

(3) Although a single drive complies with the international standards for leakage current, an installation with several drives with built-in EMC filter can trigger the RCD. Removing the RFI jumper helps, but the EMC performance of each drive would is no longer guaranteed.

Frame A~F Screw Torque: 4~6 kg-cm / [3.5~5.2 lb-in.] / [0.39~0.59 Nm]

Loosen the screw and remove the RFI Jumper (as shown below). Fasten the screw again after the RFI Jumper is removed.

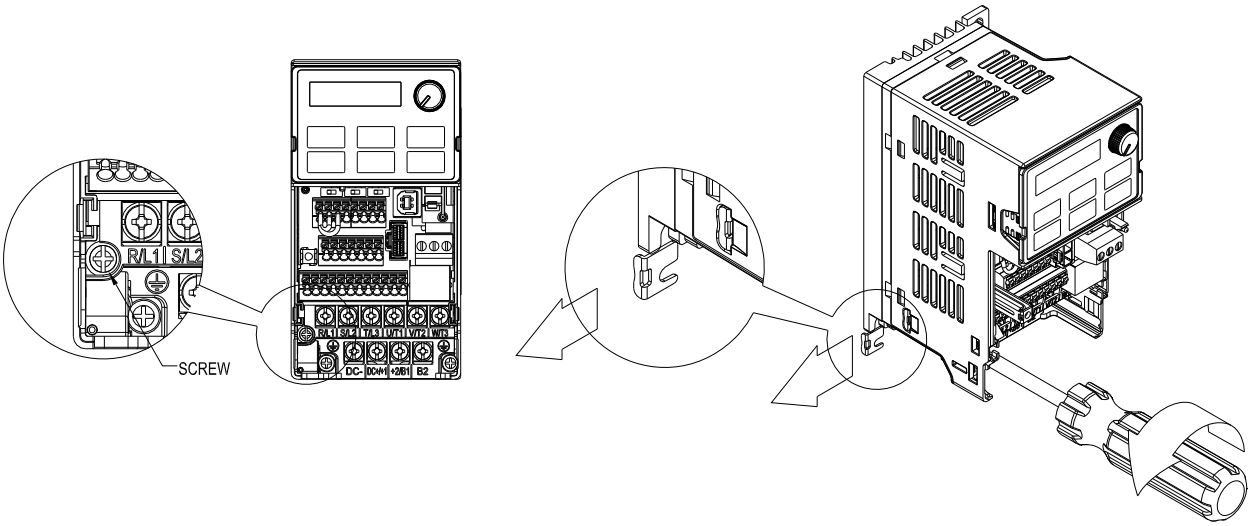

Frame B~F (model with built-in EMC filter)

Remove the RFI Jumper with a screwdriver (as shown below).

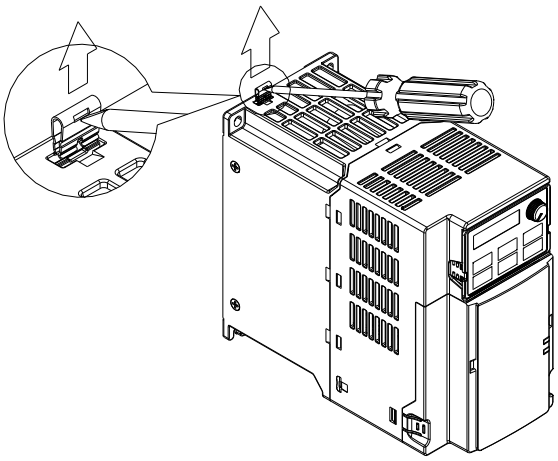

Isolating main power from ground:

When the power distribution system of the drive is a floating ground system (IT) or an asymmetric ground system (TN), the RFI Jumper must be removed. Removing the RFI Jumper disconnects the internal capacitors from ground to avoid damaging the internal circuits and to reduce the ground leakage current.

Important points regarding ground connection

- ☑ To ensure the safety of personnel, proper operation, and to reduce electromagnetic radiation, the drive must be properly grounded during installation.
- ☑ The diameter of the cables must comply with the local safety regulations.
- ☑ The shield of shielded cables must be connected to the ground of the drive to meet safety regulations.
- ☑ The shield of shielded power cables can only be used as the ground for equipment when the aforementioned points are met.
- ☑ When installing more drives, do not connect the grounds of the drives in series but connect each drive to ground.

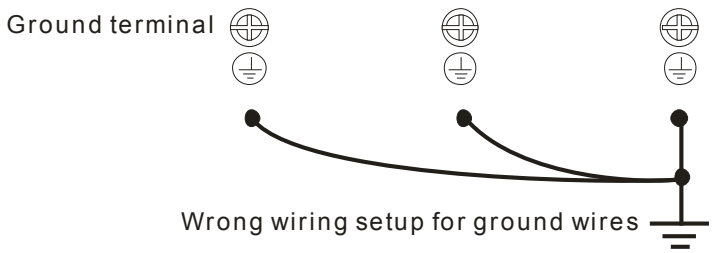

Pay particular attention to the following points:

- ☑ Do not remove the RFI jumper while the power is on.
- ☑ Removing the RFI jumper will also disconnect the built-in EMC filter capacitors. Compliance with the EMC specifications is no longer guaranteed.
- ☑ The RFI jumper may not be removed if the mains power is a grounded power system.
- ☑ The RFI jumper may not be removed while conducting high voltage tests. When conducting a high voltage test to the entire facility, the mains power and the motor must be disconnected if the leakage current is too high.

Floating Ground System (IT Systems)

A floating ground system is also called an IT system, an ungrounded system, or a high impedance/resistance (greater than 30 Ω) grounded system.

- ☑ Disconnect the RFI Jumper.
- ☑ Check whether there is excess electromagnetic radiation affecting nearby low-voltage circuits.
- ☑ In some situations, the transformer and cable naturally provide enough suppression. If in doubt, install an extra electrostatic shielded cable on the power supply side between the main circuit and the control terminals to increase security.
- ☑ Do not install an external EMC filter. The EMC filter is connected to ground through the filter capacitors, thus connecting power input to ground. This is very dangerous and can easily damage the drive.

Asymmetric Ground System (Corner Grounded TN Systems)

Caution: Do not remove the RFI jumper while the input terminal of the drive carries power.

In the following four situations, the RFI jumper must be removed. This is to prevent the system from grounding through the RFI and filter capacitors, damaging the drive.

RFI jumper must be removed	
1. Grounding at a corner in a triangle configuration 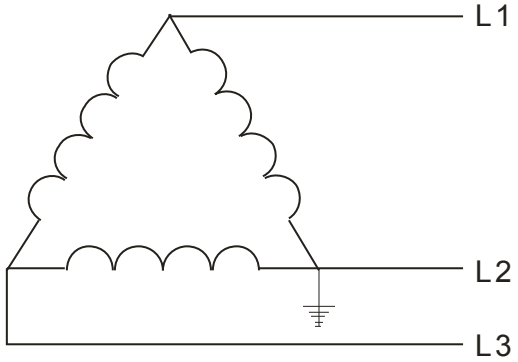 	2. Grounding at a midpoint in a polygonal configuration 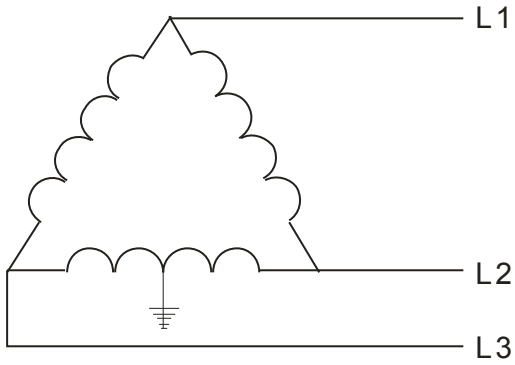
3. Grounding at one end in a single-phase configuration 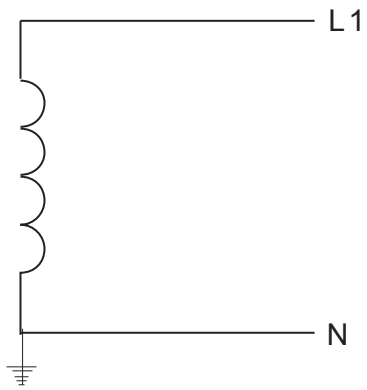 	4. No stable neutral grounding in a three-phase autotransformer configuration 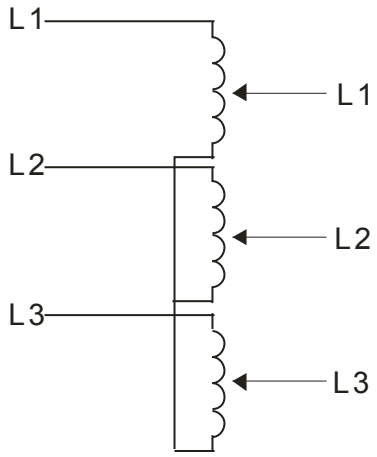
RFI jumper can be used	
Internal grounding through RFI capacitors, which reduce electromagnetic radiation. In a symmetrically grounding power system with higher EMC requirements, an EMC filter can be installed. As a reference, the diagram on the right is a symmetrical grounding power system.	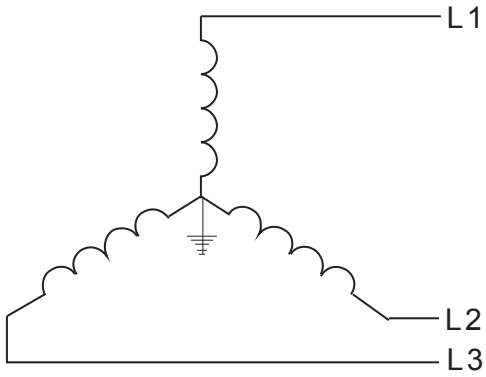

Chapter 2 Dimension

Frame A

A1: VFD1A6MS11ANSAA; VFD1A6MS11ENSAA; VFD1A6MS21ANSAA; VFD1A6MS21ENSAA; VFD1A6MS23ANSAA; VFD1A6MS23ENSAA
A2: VFD2A8MS23ANSAA; VFD2A8MS23ENSAA
A3: VFD2A5MS11ANSAA; VFD2A5MS11ENSAA; VFD2A8MS21ANSAA; VFD2A8MS21ENSAA
A4: VFD1A5MS43ANSAA; VFD1A5MS43ENSAA
A5: VFD4A8MS23ANSAA; VFD4A8MS23ENSAA; VFD2A7MS43ANSAA; VFD2A7MS43ENSAA

Unit: mm [inch]

Frame	W	H	D	W1	H1	D1	S1
A1	68.0 [2.68]	128.0 [5.04]	96.0 [3.78]	56.0 [2.20]	118.0 [4.65]	3.0 [0.12]	5.2 [0.20]
A2	68.0 [2.68]	128.0 [5.04]	110.0 [4.33]	56.0 [2.20]	118.0 [4.65]	3.0 [0.12]	5.2 [0.20]
A3	68.0 [2.68]	128.0 [5.04]	125.0 [4.92]	56.0 [2.20]	118.0 [4.65]	3.0 [0.12]	5.2 [0.20]
A4	68.0 [2.68]	128.0 [5.04]	129.0 [5.08]	56.0 [2.20]	118.0 [4.65]	3.0 [0.12]	5.2 [0.20]
A5	68.0 [2.68]	128.0 [5.04]	143.0 [5.63]	56.0 [2.20]	118.0 [4.65]	3.0 [0.12]	5.2 [0.20]

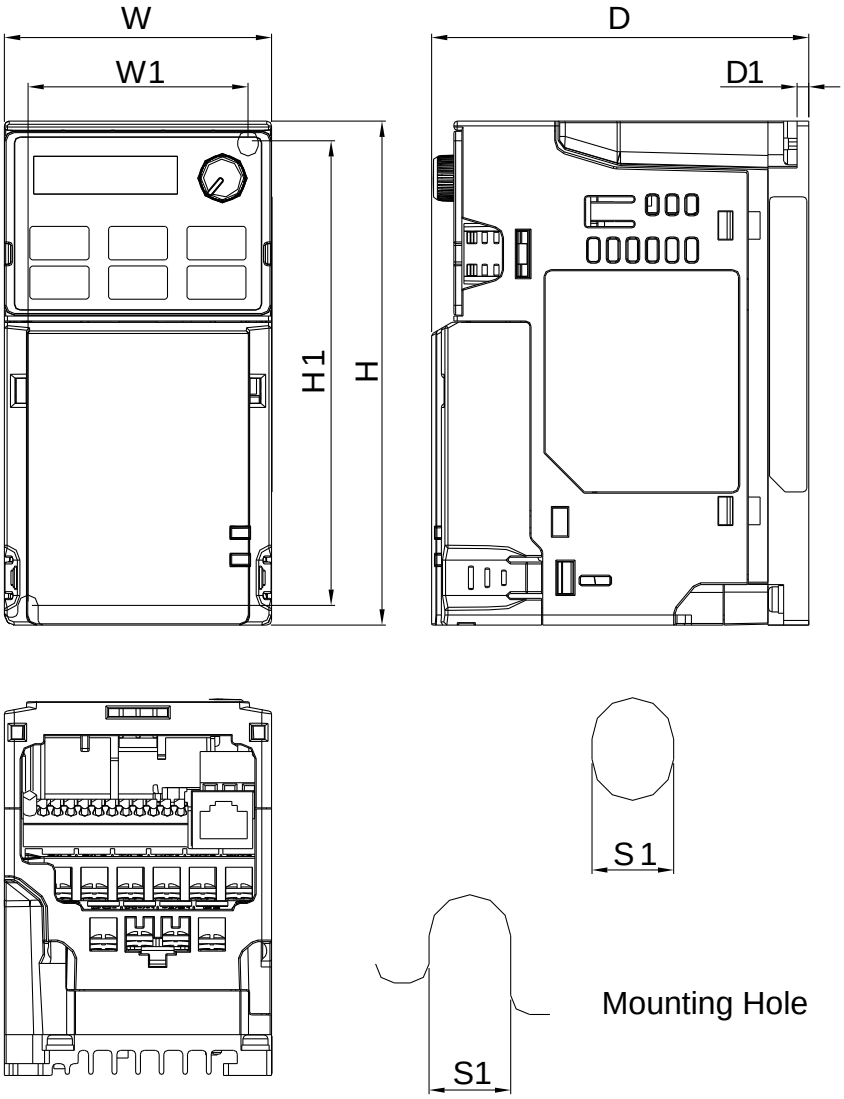

Frame B

B1: VFD7A5MS23ANSAA; VFD7A5MS23ENSAA; VFD4A2MS43ANSAA; VFD4A2MS43ENSAA
B2: VFD4A8MS21ANSAA; VFD4A8MS21ENSAA
B3: VFD1A6MS21AFSAA; VFD2A8MS21AFSAA; VFD4A8MS21AFSAA; VFD1A5MS43AFSAA; VFD2A7MS43AFSAA; VFD4A2MS43AFSAA

Unit: mm [inch]

Frame	W	H	D	W1	H1	D1	S1
B1	72.0 [2.83]	142.0 [5.59]	143.0 [5.63]	60.0 [2.36]	130.0 [5.63]	6.4 [0.25]	5.2 [0.20]
B2	72.0 [2.83]	142.0 [5.59]	143.0 [5.63]	60.0 [2.36]	130.0 [5.63]	3.0 [0.12]	5.2 [0.20]
B3	72.0 [2.83]	142.0 [5.59]	159.0 [6.26]	60.0 [2.36]	130.0 [5.63]	4.3 [0.17]	5.2 [0.20]

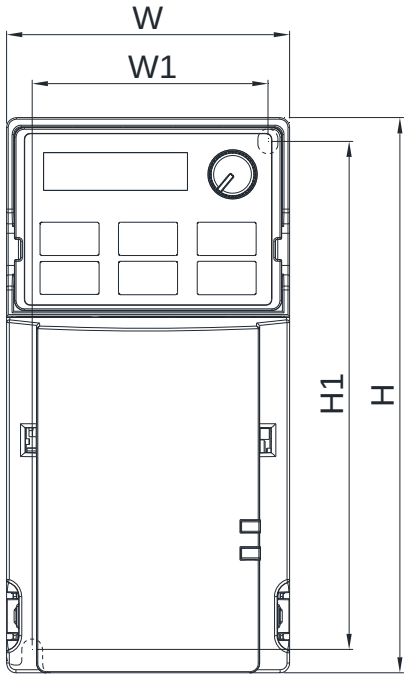

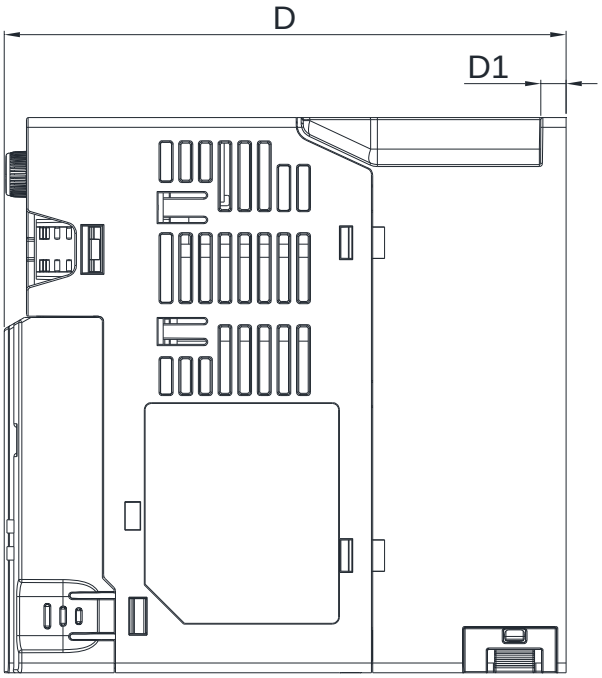

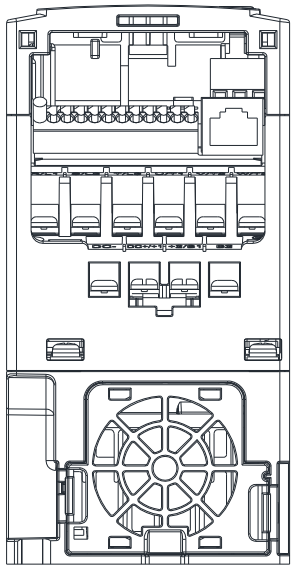

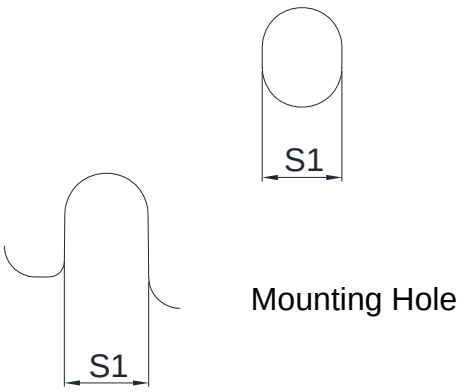

Frame C

C1: VFD4A8MS11ANSAA; VFD4A8MS11ENSAA; VFD7A5MS21ANSAA; VFD7A5MS21ENSAA; VFD11AMS21ANSAA; VFD11AMS21ENSAA; VFD11AMS23ANSAA; VFD11AMS23ENSAA; VFD17AMS23ANSAA; VFD17AMS23ENSAA; VFD5A5MS43ANSAA; VFD5A5MS43ENSAA; VFD9A0MS43ANSAA; VFD9A0MS43ENSAA

C2: VFD7A5MS21AFSAA; VFD11AMS21AFSAA; VFD5A5MS43AFSAA; VFD9A0MS43AFSAA

Unit: mm [inch]

Frame	W	H	D	W1	H1	D1	S1
C1	87.0 [3.43]	157.0 [6.18]	152.0 [5.98]	73.0 [2.87]	144.5 [5.69]	5.0 [0.20]	5.5 [0.22]
C2	87.0 [3.43]	157.0 [6.18]	179.0 [7.05]	73.0 [2.87]	144.5 [5.69]	5.0 [0.20]	5.5 [0.22]

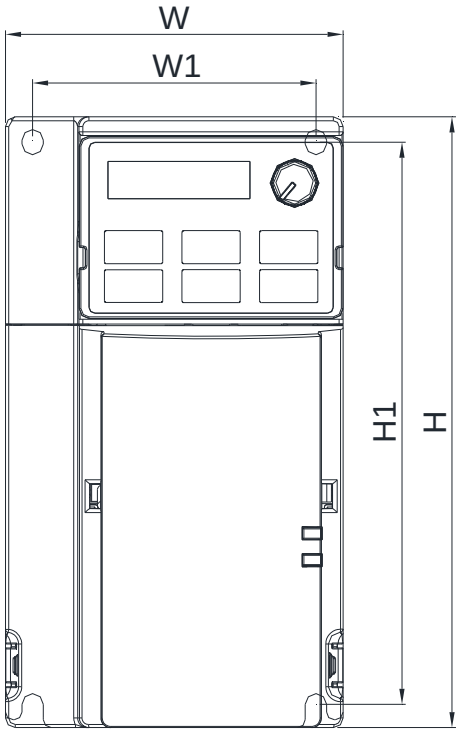

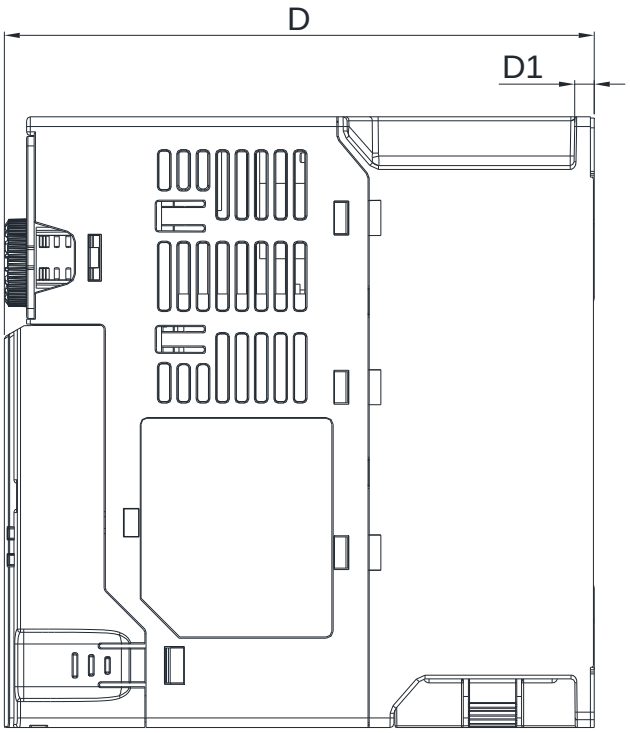

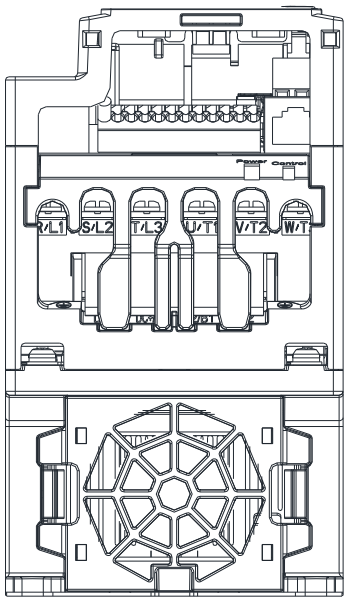

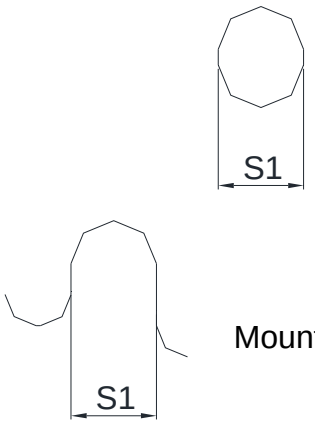

Mounting Hole

Frame D

D1: VFD25AMS23ANSAA; VFD25AMS23ENSAA; VFD13AMS43ANSAA; VFD13AMS43ENSAA; VFD17AMS43ANSAA; VFD17AMS43ENSAA
D2: VFD13AMS43AFSAA; VFD17AMS43AFSAA

Unit: mm [inch]

Frame	W	H	D	W1	H1	D1	S1
D1	109.0 [4.29]	207.0 [8.15]	154.0 [6.06]	94.0 [3.70]	193.8 [7.63]	6.0 [0.24]	5.5 [0.22]
D2	109.0 [4.29]	207.0 [8.15]	187.0 [7.36]	94.0 [3.70]	193.8 [7.63]	6.0 [0.24]	5.5 [0.22]

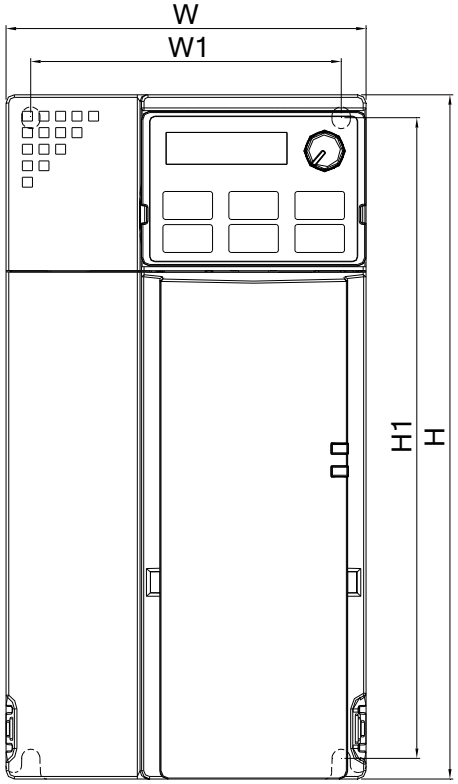

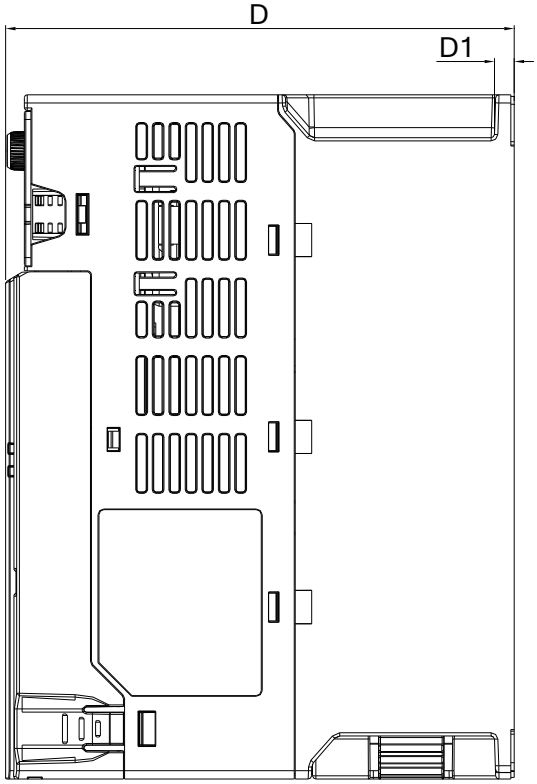

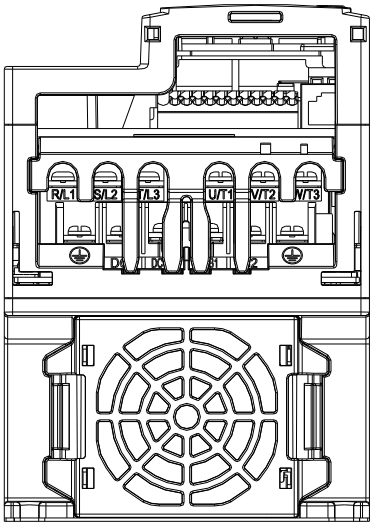

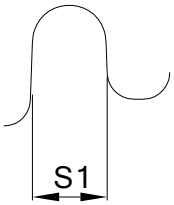

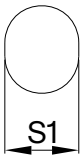

Mounting Hole

Frame E

E1: VFD33AMS23ANSAA; VFD33AMS23ENSAA; VFD49AMS23ANSAA; VFD49AMS23ENSAA; VFD25AMS43ANSAA; VFD25AMS43ENSAA; VFD32AMS43ANSAA; VFD32AMS43ENSAA
E2: VFD25AMS43AFSAA; VFD32AMS43AFSAA

Unit: mm [inch]

Frame	W	H	D	W1	H1	D1	S1
E1	130.0 [5.12]	250.0 [9.84]	185.0 [7.83]	115.0 [4.53]	236.8 [9.32]	6.0 [0.24]	5.5 [0.22]
E2	130.0 [5.12]	250.0 [9.84]	219.0 [8.62]	115.0 [4.53]	236.8 [9.32]	6.0 [0.24]	5.5 [0.22]

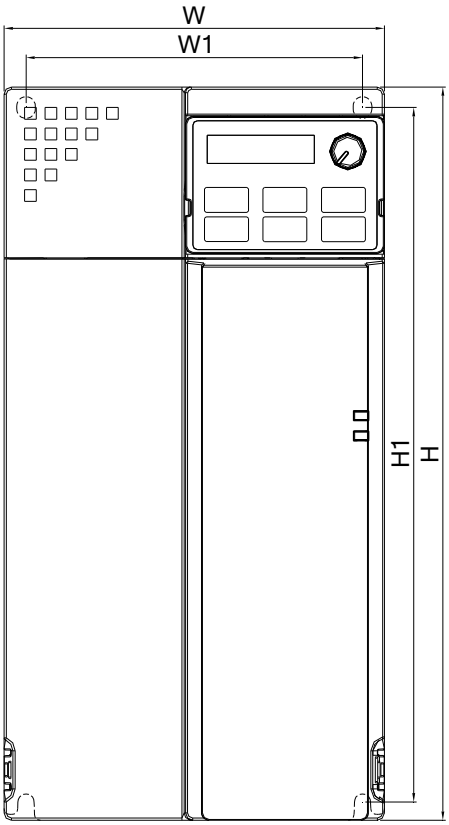

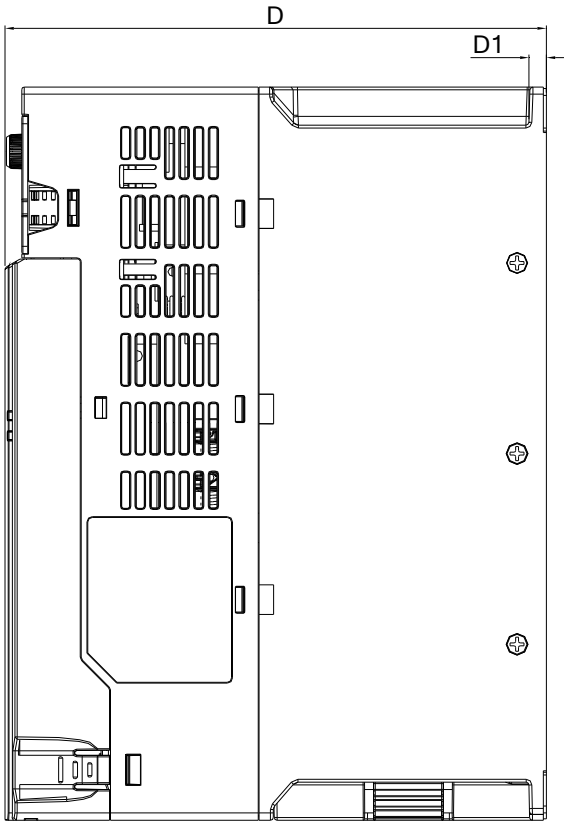

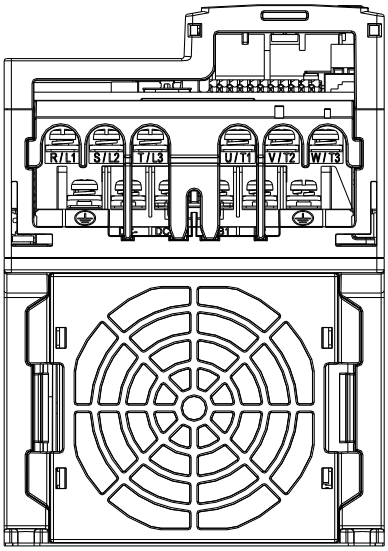

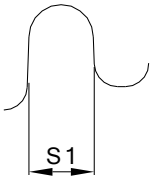

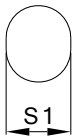

Mounting Hole

Frame F

F1: VFD65AMS23ANSAA; VFD65AMS23ENSAA; VFD38AMS43ANSAA; VFD38AMS43ENSAA; VFD45AMS43ANSAA; VFD45AMS43ENSAA
F2: VFD38AMS43AFSAA; VFD45AMS43AFSAA

Unit: mm [inch]

Frame	W	H	D	W1	H1	D1	S1
F1	175.0 [6.89]	300.0 [11.81]	192.0 [7.56]	154.0 [6.06]	279.5 [11.00]	6.5 [0.26]	8.4 [0.33]
F2	175.0 [6.89]	300.0 [11.81]	244.0 [9.61]	154.0 [6.06]	279.5 [11.00]	6.5 [0.26]	8.4 [0.33]

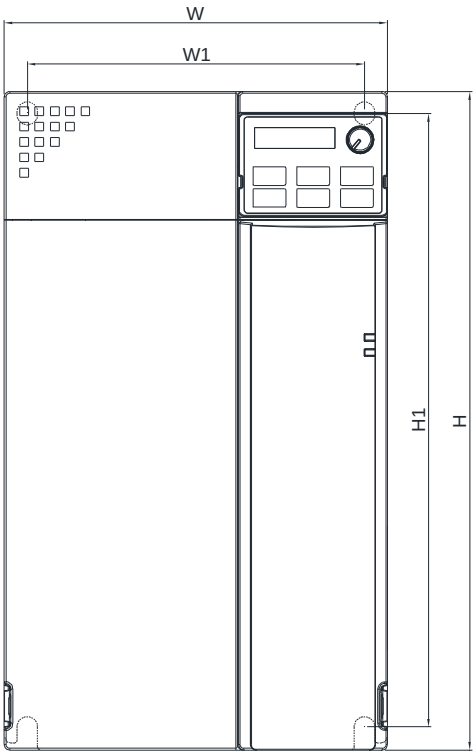

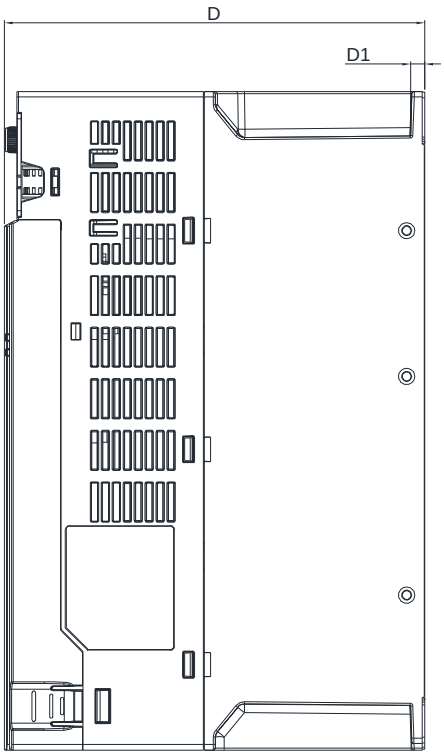

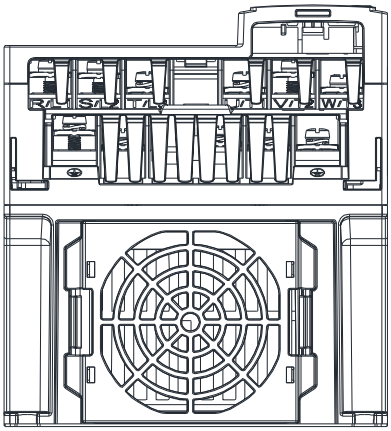

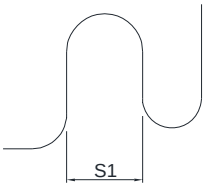

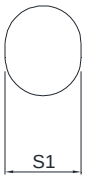

Mounting Hole

Digital Keypad

KPMS-LE01

Unit: mm [inch]

W	W1	W2	W3	H	H1	H2
68.0 [2.67]	63.8 [2.51]	45.2 [1.78]	8.0 [0.31]	46.8 [1.84]	42.0 [1.65]	26.0 [1.02]

H3	D	D1	D2	D3	D4	S1
7.5 [0.31]	30.0 [1.18]	22.7 [0.89]	2.0 [0.08]	2.2 [0.09]	1.3 [0.05]	M3*0.5(2X)

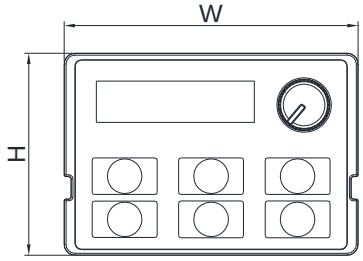

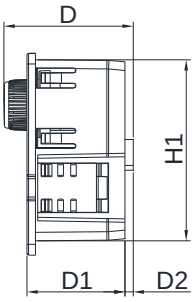

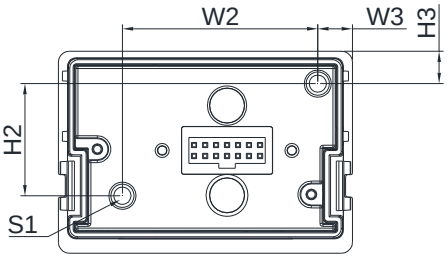

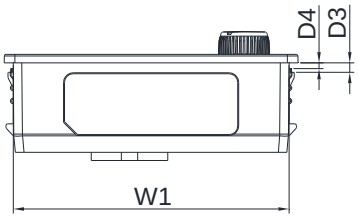

[This page intentionally left blank]

Chapter 3 Installation

Minimum Mounting Clearance and Installation

- ☑ Prevent fiber particles, scraps of paper, shredded wood saw dust, metal particles, etc. from adhering to the heat sink
- ☑ Install the AC motor drive in a metal cabinet. When installing one drive below another one, use a metal separation between the AC motor drives to prevent mutual heating and to prevent the risk of accidental fire.
- ☑ Install the AC motor drive in Pollution Degree 2 environments only: normally only nonconductive pollution occurs and temporary conductivity caused by condensation is expected.

The appearances shown in the following figures are for reference only.

Airflow direction: inflow outflow distance

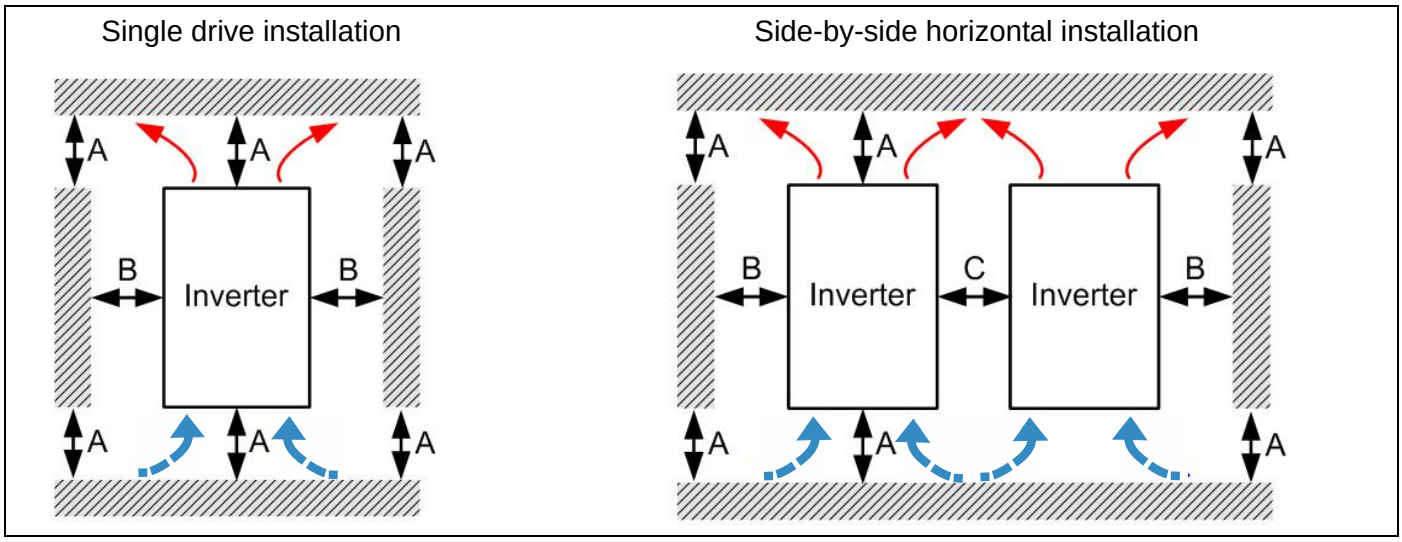

Minimum mounting clearance

Installation method	A (mm)	B (mm)	C (mm)	Ambient temperature (°C)	
				Max. (Without derating)	Max. (Derating)
Single drive installation	50	30	-	50	60
Side-by-side horizontal installation	50	30	30	50	60
Zero stack installation	50	30	0	40	50

NOTE

The minimum mounting clearances A~C stated in the table above applies to AC motor drives installation. Failing to follow the minimum mounting clearances may cause the fan to malfunction and heat dissipation problems.

Frame	Air flow rate for cooling			Power Dissipation		
	Model No.	Flow Rate (Unit: cfm)	Flow Rate (Unit: m^3 / hr)	Loss External (Heat sink, unit: W)	Internal (Unit: W)	Total (Unit: W)
A	VFD1A6MS11ANSAA VFD1A6MS11ENSAA	0.0	0.0	8.0	10.0	18.0
	VFD2A5MS11ANSAA VFD2A5MS11ENSAA			14.2	13.1	27.3
	VFD1A6MS21ANSAA VFD1A6MS21ENSAA			8.0	10.3	18.3
	VFD2A8MS21ANSAA VFD2A8MS21ENSAA			16.3	14.5	30.8
	VFD1A6MS23ANSAA VFD1A6MS23ENSAA			8.6	10.0	18.6
	VFD2A8MS23ANSAA VFD2A8MS23ENSAA			16.5	12.6	29.1
	VFD4A8MS23ANSAA VFD4A8MS23ENSAA			31.0	13.2	44.2
	VFD1A5MS43ANSAA VFD1A5MS43ENSAA			17.6	11.1	28.7
	VFD2A7MS43ANSAA VFD2A7MS43ENSAA			30.5	17.8	48.3
B	VFD1A6MS21AFSAA	0.0	0.0	8.0	10.3	18.3
	VFD2A8MS21AFSAA	10.0	16.99	16.3	14.5	30.8
	VFD4A8MS21ANSAA VFD4A8MS21ENSAA	0.0	0.0	29.1	20.1	49.2
	VFD4A8MS21AFSAA	10.0	16.99	29.1	20.1	49.2
	VFD7A5MS23ANSAA VFD7A5MS23ENSAA			50.1	24.2	74.3
	VFD1A5MS43AFSAA			17.6	11.1	28.7
	VFD2A7MS43AFSAA			30.5	17.8	48.3
	VFD4A2MS43ANSAA VFD4A2MS43ENSAA VFD4A2MS43AFSAA			45.9	21.7	67.6
C	VFD4A8MS11ANSAA VFD4A8MS11ENSAA	16.0	27.2	29.1	23.9	53.0
	VFD7A5MS21ANSAA VFD7A5MS21ENSAA VFD7A5MS21AFSAA			46.5	31.0	77.5
	VFD11AMS21ANSAA VFD11AMS21ENSAA VFD11AMS21AFSAA			70.0	35	105
	VFD11AMS23ANSAA VFD11AMS23ENSAA			76.0	30.7	106.7
	VFD17AMS23ANSAA VFD17AMS23ENSAA			108.2	40.1	148.3
	VFD5A5MS43ANSAA VFD5A5MS43ENSAA VFD5A5MS43AFSAA			60.6	22.8	83.4
	VFD9A0MS43ANSAA			93.1	42	135.1

Frame	Air flow rate for cooling			Power Dissipation		
	Model No.	Flow Rate (Unit: cfm)	Flow Rate (Unit: m^3 / hr)	Loss External (Heat sink, unit: W)	Internal (Unit: W)	Total (Unit: W)
	VFD9A0MS43ENSAA VFD9A0MS43AFSAA					
D	VFD25AMS23ANSAA VFD25AMS23ENSAA	23.4	39.7	192.8	53.3	246.1
	VFD13AMS43ANSAA VFD13AMS43ENSAA VFD13AMS43AFSAA			132.8	39.5	172.3
	VFD17AMS43ANSAA VFD17AMS43ENSAA VFD17AMS43AFSAA			164.7	55.8	220.5
E	VFD33AMS23ANSAA VFD33AMS23ENSAA	53.7	91.2	244.5	79.6	324.1
	VFD49AMS23ANSAA VFD49AMS23ENSAA			374.2	86.2	460.4
	VFD25AMS43ANSAA VFD25AMS43ENSAA VFD25AMS43AFSAA			234.5	69.8	304.3
	VFD32AMS43ANSAA VFD32AMS43ENSAA VFD32AMS43AFSAA			319.8	74.3	394.1
F	VFD65AMS23ANSAA VFD65AMS23ENSAA	67.9	115.2	492.0	198.2	690.2
	VFD38AMS43ANSAA VFD38AMS43ENSAA VFD38AMS43AFSAA			423.5	181.6	605.1
	VFD45AMS43ANSAA VFD45AMS43ENSAA VFD45AMS43AFSAA			501.1	200.3	701.4

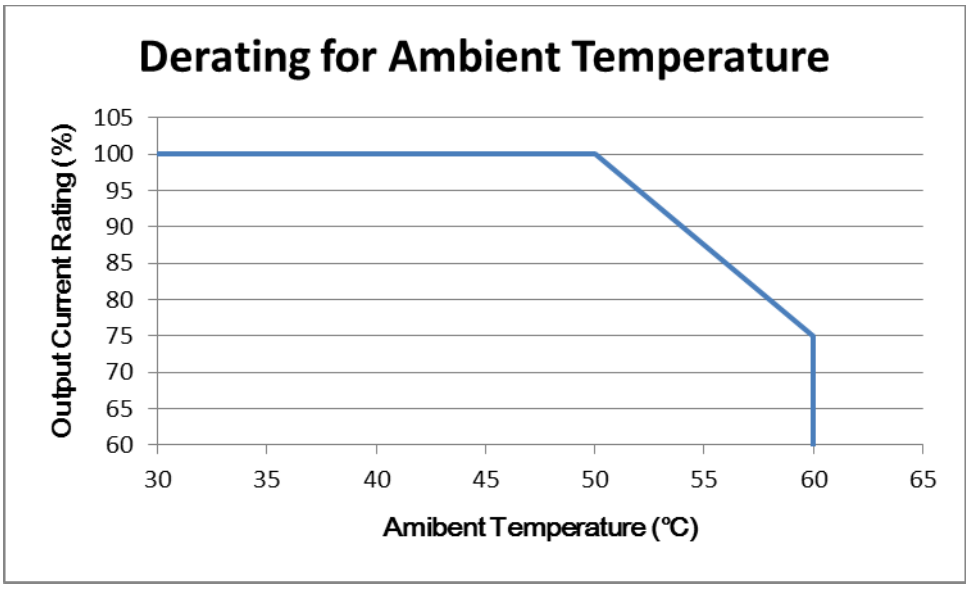

[This page intentionally left blank]

Chapter 4 Wiring

4-1 Wiring

4-2 System Wiring Diagram

After removing the front cover, please check if the power and control terminals are clearly visible. Please read following precautions to avoid wiring mistakes.

DANGER	☑ It is crucial to **cut off the AC motor drive power** before doing any wiring. A charge may still remain in the DC bus capacitors with hazardous voltages even after the power has been turned off a short time. Therefore it is suggested to measure the remaining voltage with a DC voltmeter on +1/DC+ and DC- before doing any wiring. For your personnel saftery, please do not start wiring before the voltage drops to a safe level < 25 Vdc. Wiring the installation with a remaning voltage condition may cause injuries, sparks and short circuits. ☑ Only qualified personnel familiar with AC motor drives is allowed to perform installation, wiring and commissioning. Make sure the power is turned off before wiring to prevent electric shocks. ☑ The terminals R/L1、S/L2、T/L3 are for mains power input. If mains power is wrongly connected to other terminals, it may result in damage to the equipment. The voltage and current should lie within the range as indicated on the nameplate (see Chapter 1-1). ☑ All units must be grounded directly to a common ground terminal to prevent electrical shocks or damage by lightning. ☑ Please make sure to tighten the screw of the main circuit terminals to prevent sparks due to the loosening of vibrations.
CAUTION	☑ When wiring, please choose the wires with specification that complies with local regulations for your personal safety. ☑ Check following items after finishing the wiring: 1. Are all connections correct? 2. Any loose wires? 3. Any short-circuits between the terminals or to ground?

4-1 Wiring

It provides 1-phase / 3-phase power

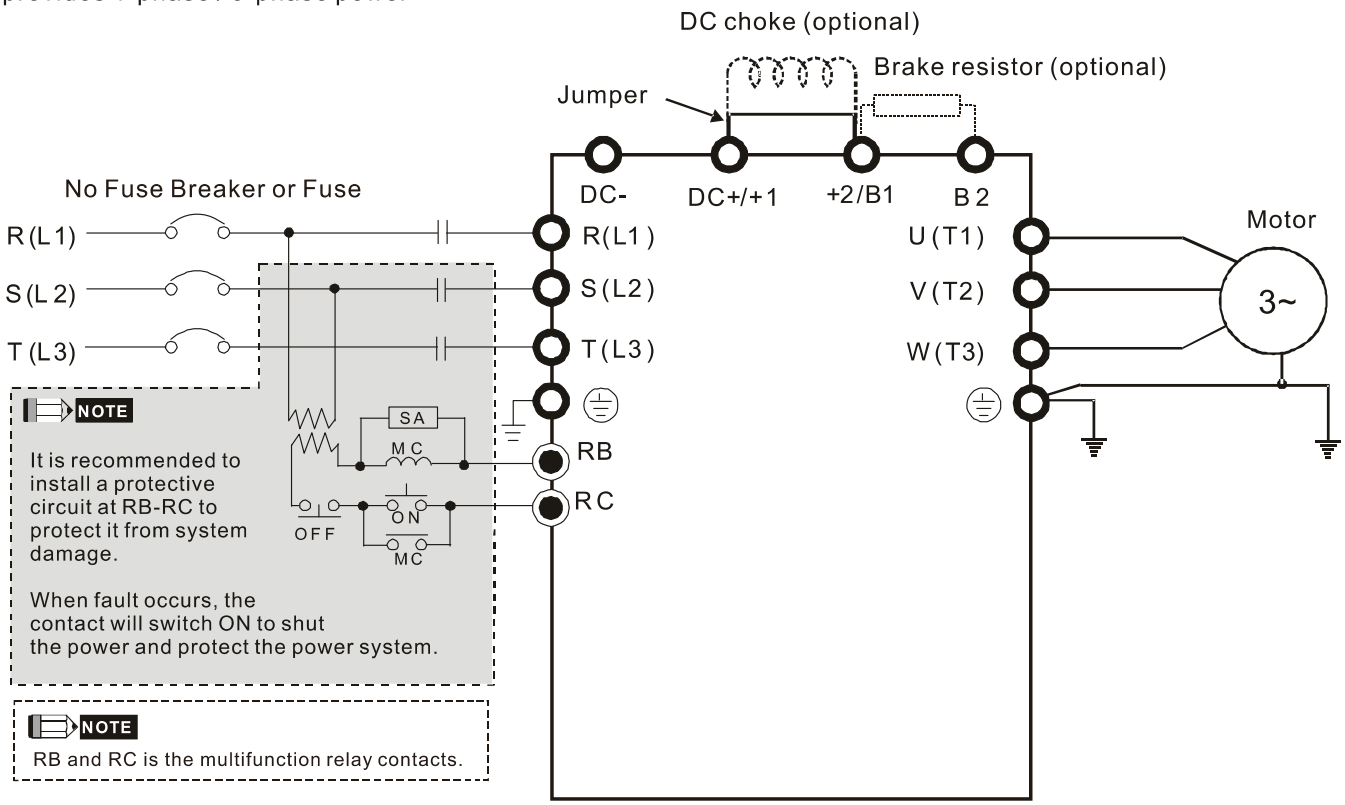

Figure 1

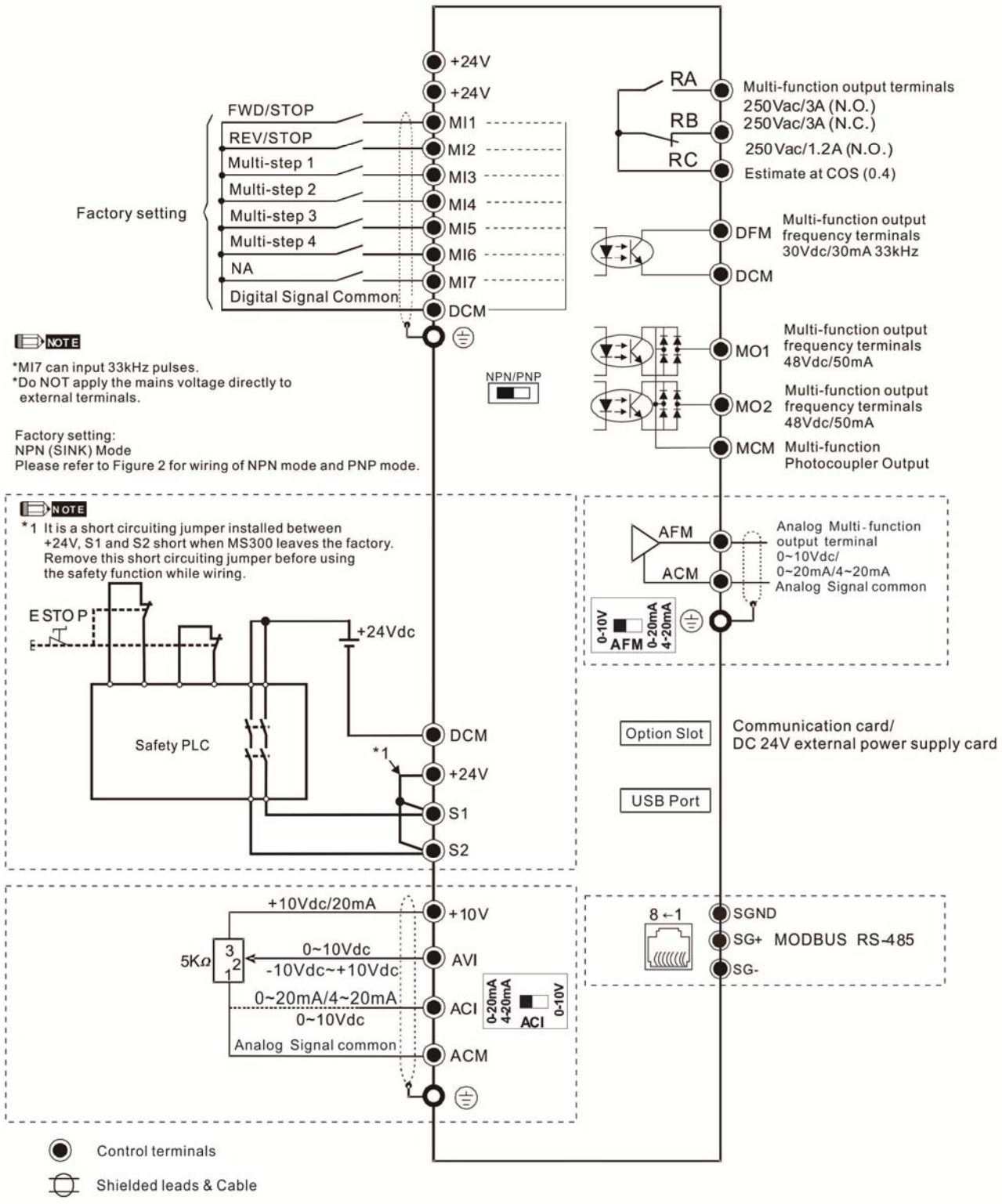
+24V
+24V
FWD/STOP
REV/STOP
Multi-step 1
Multi-step 2
Multi-step 3
Multi-step 4
NA
Digital Signal Common
Factory setting
MI1
MI2
MI3
MI4
MI5
MI6
MI7
DCM
RA
RB
RC
Multi-function output terminals
250Vac/3A (N.O.)
250Vac/3A (N.C.)
250Vac/1.2A (N.O.)
Estimate at COS (0.4)
DFM
DCM
Multi-function output frequency terminals 30Vdc/30mA 33kHz
MO1
Multi-function output frequency terminals 48Vdc/50mA
MO2
Multi-function output frequency terminals 48Vdc/50mA
MCM
Multi-function Photocoupler Output
NOTE
*MI7 can input 33kHz pulses.
*Do NOT apply the mains voltage directly to external terminals.
NPN/PNP
Factory setting:
NPN (SINK) Mode
Please refer to Figure 2 for wiring of NPN mode and PNP mode.
NOTE
*1 It is a short circuiting jumper installed between +24V, S1 and S2 short when MS300 leaves the factory. Remove this short circuiting jumper before using the safety function while wiring.
ESTOP
+24Vdc
Safety PLC
*1
DCM
+24V
S1
S2
AFM
ACM
Analog Multi-function output terminal
0~10Vdc/
0~20mA/4~20mA
Analog Signal common
0-10V
AFM
0-20mA
4-20mA
Option Slot
Communication card/
DC 24V external power supply card
USB Port
+10Vdc/20mA
+10V
5KΩ
0~10Vdc
-10Vdc~+10Vdc
AVI
0~20mA/4~20mA
0~10Vdc
ACI
Analog Signal common
ACM
0-20mA
4-20mA
ACI
0-10V
8←1
SGND
SG+
SG-
MODBUS RS-485
Control terminals
Shielded leads & Cable

Figure 2

SINK (NPN) / SOURCE (PNP) Mode

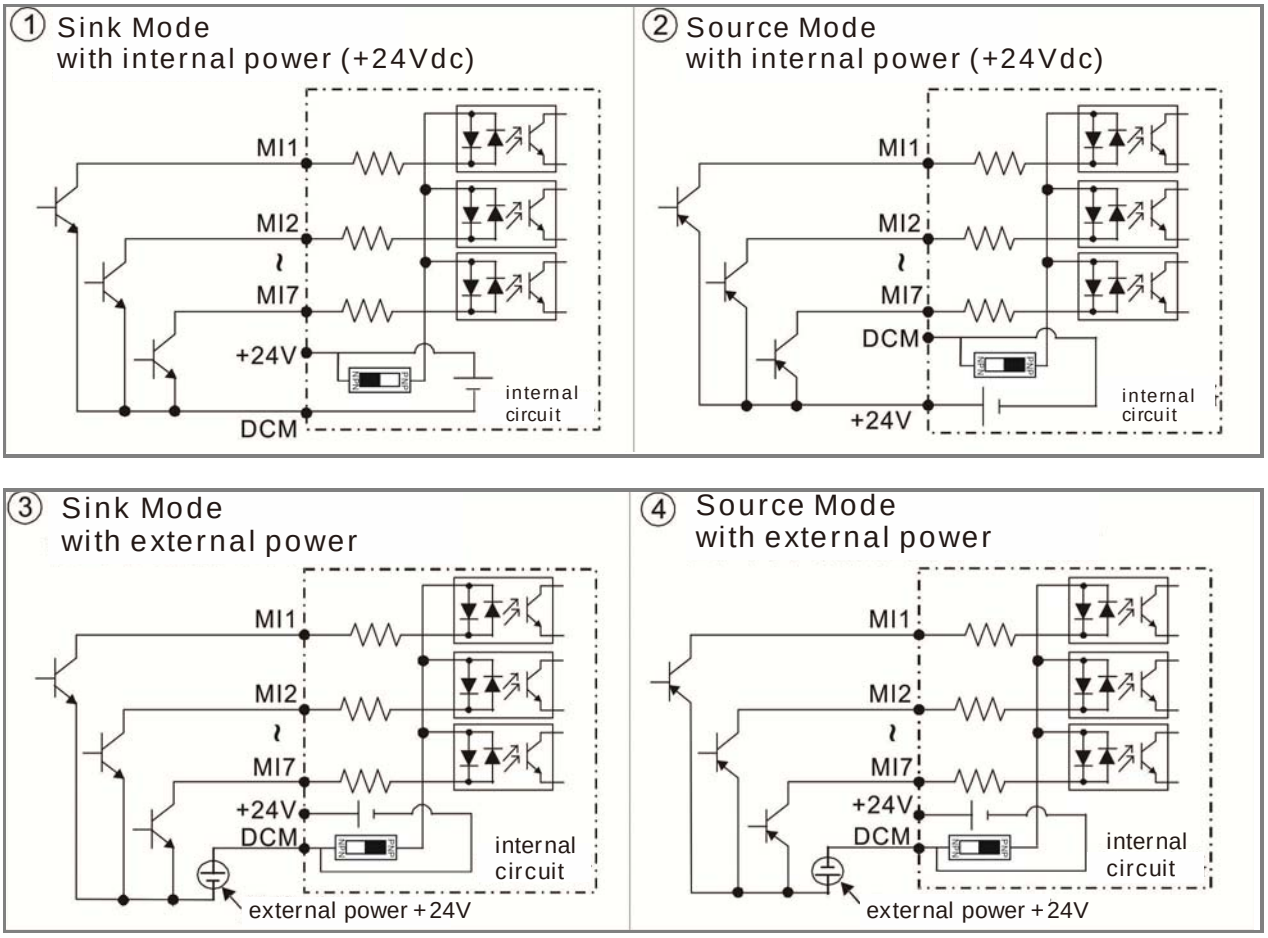

4-2 System Wiring Diagram

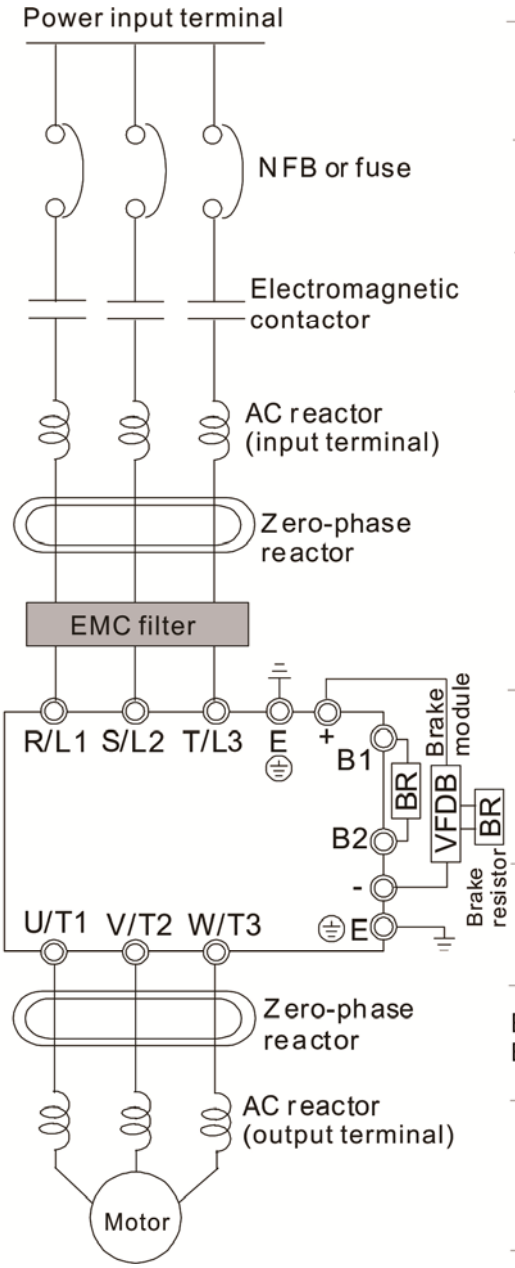

Power input terminal	Please refer to Chapter 9 Specification Table in user manual for detail
NFB or fuse	There may be a large inrush current during power on. Refer to 7-2 NFB to select a suitable NFB or 7-3 Fuse Specification Chart.
Electromagnetic contactor	Switching the power ON/OFF before the magnetic contactor more than 1xper hour can cause damage to the drive.
AC reactor (input terminal)	When the mains power capacity is > 500kVA or when the drive is preceded by a capacitor bank, instantaneous peaks voltages and current may destroy the drive. In that case it is recommended to install an AC input reactor which will also improve the power factor and harmonics. The cable between reactor and drive should be < 10m. Please refer to Chapter 7-4.
Zero-phase reactor	Used to reduce radiated emission, especially in environments with audio devices, and reduce input and output side interference. The effective range is AM band to 10MHz. Please refer to Chapter 7-5.
EMC filter	Can be used to reduce electromagnetic interference. Please refer to Chapter 7-6.
Brake module & Brake resistor(BR)	Used to shorten the deceleration time of the motor. Please refer to Chapter 7-1.
AC reactor (output terminal)	The motor cable length will affect switching current peaks. It is recommended to install an AC output reactor when the motor cable length exceeds the value in Chapter 7-4.

Chapter 5 Main Circuit Terminals

5-1 Main Circuit Diagram

5-2 Main Circuit Terminals

DANGER

- ☑ Fasten the main circuit terminal screws to prevent sparking by loose screws due to vibration.
- ☑ When needed, only use an inductive filter at the motor output terminals U/T1, V/T2, W/T3 of the AC motor drive. DO NOT use phase-compensation capacitors or L-C (Inductance-Capacitance) or R-C (Resistance-Capacitance), unless approved by Delta.
- ☑ DO NOT connect brake resistor directly to +1/DC+ to DC-, +2/B1 to DC- to prevent damage to the drive.
- ☑ Ensure proper insulation of main circuit wiring in accordance with the relevant safety regulations.

CAUTION

Main power terminals

- ☑ R/L1, S/L2 and T/L3 have no phase-sequence requirement; they can be connected in any sequence.
- ☑ It is recommended adding a magnetic contactor (MC) at the power input to cut off power quickly and reduce malfunctioning when the protection function of the AC motor drive is activated. Both ends of the MC should have an R-C surge absorber.
- ☑ Please ensure voltages and currents are within specification.
- ☑ When using a general GFCI (Ground Fault Circuit Interrupter), select a sensitivity ≥200mA and ≥0.1s operation time to avoid nuisance tripping.
- ☑ Please use conduits or shielded cables for the power wiring and ground both ends of the conduit or shielded cables.
- ☑ DO NOT run/stop the drive by turning the power ON/OFF. Run/stop the drive by RUN/STOP command. If you still need to run/stop the drive by turning power ON/OFF, it is strongly recommended to do so only ONCE per hour.
- ☑ To comply with UL standards, connect the drive to a 3WYE type of mains power system.

Output terminals for main circuit

- ☑ Use a well-insulated motor, suitable for inverter operation.
- ☑ When the AC drive output terminals U/T1, V/T2, and W/T3 are connected to the motor terminals U/T1, V/T2, and W/T3 respectively, the motor will rotate counterclockwise (as viewed on the shaft end of the motor) when a forward operation command is received. To permanently reverse the direction of rotation, switch over any two motor leads.

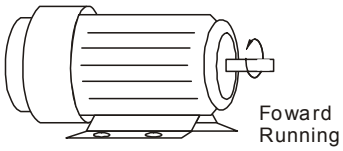

Terminals for connecting DC reactor, external brake resistor and DC circuit

☑ These are the terminals for connecting the DC-reactor to improve the power factor and harmonics. At delivery they are shorted by a jumper. Please remove it before connecting the DC reactor.

☑ The jumper must be fastened tight when it does not connect DC reactor, use DC+/+1, +2/B1 to execute common DC bus, or connect with brake resistor, otherwise the drive might lose power or the terminals will be broken.

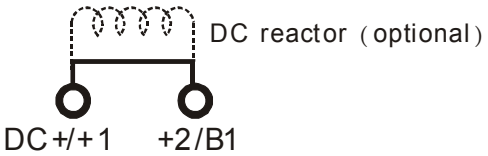

☑ Connect a brake resistor in applications with frequent deceleration, short deceleration time, too low braking torque or requiring increased braking torque.

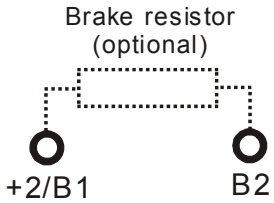

☑ The external brake resistor should connect to the terminals [+2 / B1], [B2] of AC motor drives.

☑ DO NOT short circuit or connect a brake resistor directly to DC+/+1 and DC-, +2/B1 to DC- otherwise the drive will be damaged.

☑ DC+ and DC- are to be connected in common DC bus applications, please refer to Chapter 5-1(Main Circuit Terminal) for the wiring terminal specification and the wire gauge information.

Remove the front cover

📖 The front cover shall be removed before connecting the main circuit terminals and control circuit terminals. Removing the cover acc. to the figure below.

📖 The figure below shows Frame A model for example. Removing the cover on other frame sizes is similar.

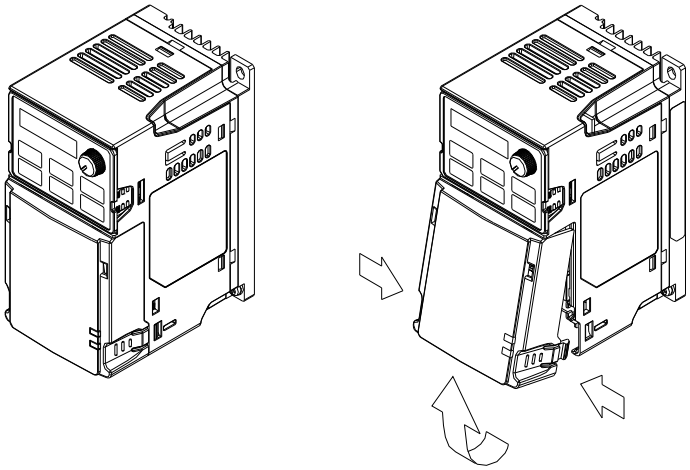

Press the clip on both sides, and take out by rotating.

5-1 Main Circuit Diagram

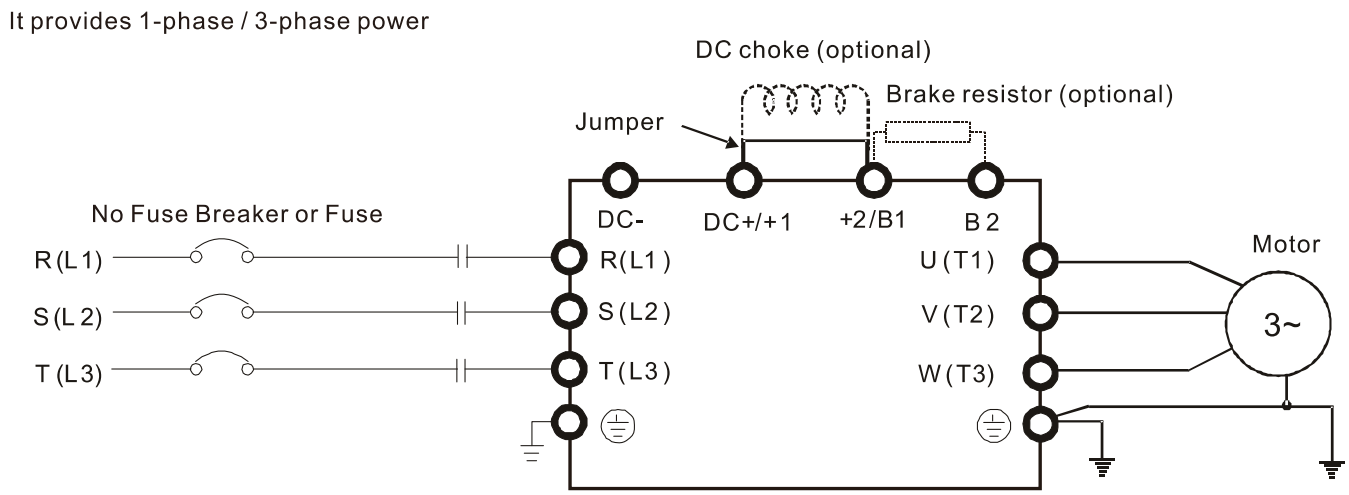

Terminals	Descriptions
R/L1, S/L2	Mains input terminals 1-phase
R/L1, S/L2, T/L3	Mains input terminals 3-phase
U/T1, V/T2, W/T3	Motor output terminals for connecting 3-phase IM and PM motors.
+1, +2	Connections for DC reactor to improve the power factor and harmonics. The jumper needs to be removed in that case.
DC+, DC-	Connections for brake unit (VFDB series) Common DC Bus
B1, B2	Connections for brake resistor (optional)
⏚	Earth connection, please comply with local regulations.

5-2 Main Circuit Terminals

- It needs following additional terminal when wiring. The additional terminal dimension should comply with the following figure 1.
- After crimping the wire to the ring lug (must UL approved), UL and CSA approved R/C (YDPU2) heat shrink tubing rated min 600Vac insulation shall be install over the live part. Please refer to the following figure 2.

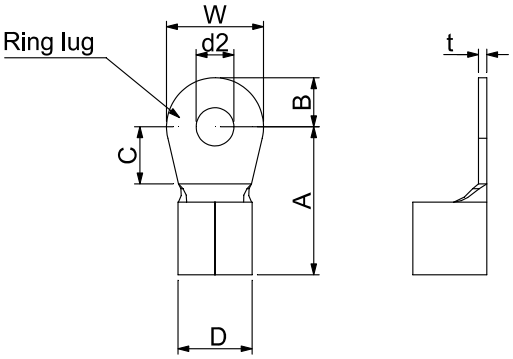

Figure 1.

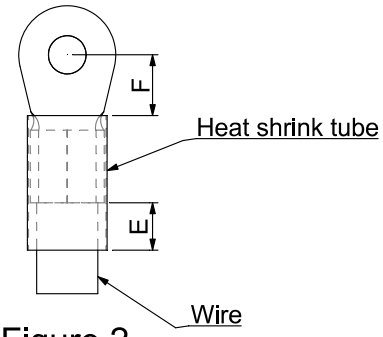

Figure 2.

Dimensions of Ring Lug

Frame	AWG	Kit P/N	A (MAX)	B (MAX)	C (MIN)	D (MAX)	d2 (MIN)	E (MIN)	F (MIN)	W (MAX)	t (MAX)
A	18	RNBS 1-3.7	9.8	3.2	4.8	4.1	3.7	13.0	4.2	6.6	0.8
	16	RNBS 2-3.7									
	14	RNBS 2-3.7									
B	14	RNBS2-4	12.1	3.6	6.1	5.6	4.3	13.0	4.5	7.2	1
	12	RNBS5-4									
C	14	RNBS2-4	17.8	5.0	6.1	7.2	4.3	13.0	5.5	8.0	1.2
	12	RNBS5-4									
	10	RNBS5-4									
	8	RNBS8-4									
D	12	RNBS5-4	17.8	5.0	6.1	7.2	4.3	13.0	5.5	8.0	1.2
	10	RNBS5-4									
	8	RNBS8-4									
E	8	RNBS8-5	27.1	6.1	10.5	11.5	5.3	13.0	6.5	12.2	1.7
	6	RNB14-5									
	4	RNBS22-5									
F	6	RNBS14-6	35.0	9.0	13.3	14.0	6.2	13.0	19.5	18.0	1.8
	4	RNBS22-6									
	2	RNBS38-6									

Unit: mm

Frame A

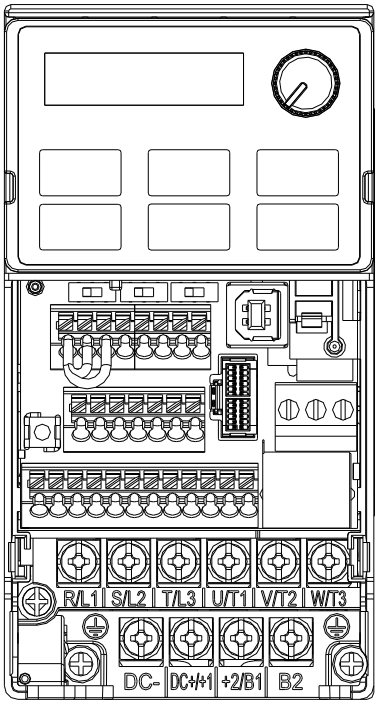

Main circuit terminals:
R/L1, S/L2, T/L3, U/T1, V/T2, W/T3, ⏚, DC-, DC+/+1, +2/B1, B2, ⏚

Note: 1-phase model with no T/L3 terminal

Models	Max. Wire Gauge	Min. Wire Gauge	Screw	Torque (±10%)
VFD1A6MS11ANSAA	14 AWG [2.1 mm^2]	16AWG [1.3mm^2]	M 3.5	9 kg-cm [7.8 lb-in.] [0.88 Nm]
VFD1A6MS11ENSAA				
VFD2A5MS11ANSAA		14AWG [2.1mm^2]		
VFD2A5MS11ENSAA				
VFD1A6MS21A SAA		16AWG [1.3mm^2]		
VFD1A6MS21ENSAA				
VFD2A8MS21ANSAA		14AWG [2.1mm^2]		
VFD2A8MS21ENSAA				
VFD1A6MS23ANSAA		18AWG [0.82mm^2]		
VFD1A6MS23ENSAA				
VFD2A8MS23ANSAA				
VFD2A8MS23ENSAA				
VFD4A8MS23ANSAA		16AWG [1.3mm^2]		
VFD4A8MS23ENSAA				
VFD1A5MS43ANSAA		18AWG [0.82mm^2]		
VFD1A5MS43ENSAA				
VFD2A7MS43ANSAA				
VFD2A7MS43ENSAA				

- If you install at Ta 45°C above environment, please select copper wire which have voltage rating 600V and temperature resistant 90°C or above.
- If you install at Ta 45°C environment, please select copper wire which have voltage rating 600V and temperature resistant 75°C or 90°C.
- For UL installation compliant, you have to use copper wires when installation, the wire gauge is based on temperature resistant 75°C which is according to the requirements and recommendations from UL. Do not reduce the wire gauge when using higher temperature wire.

Frame B

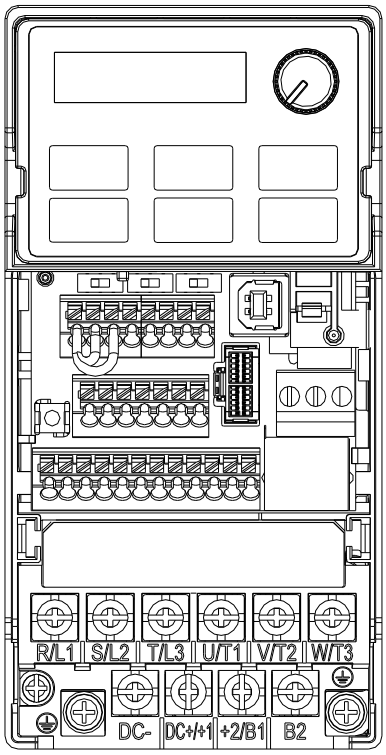

Main circuit terminals:
R/L1, S/L2, T/L3, U/T1, V/T2, W/T3,⏚,DC-, DC+/+1, +2/B1, B2,⏚

Note: 1-phase model with no T/L3 terminal

Models	Max. Wire Gauge	Min. Wire Gauge	Screw	Torque (±10%)
VFD1A6MS21AFSAA	12 AWG [3.3 mm^2]	14 AWG [2.1 mm^2]	M4	15 kg-cm [13.0 lb-in] [1.47 Nm]
VFD2A8MS21AFSAA				
VFD4A8MS21ANSAA				
VFD4A8MS21ENSAA				
VFD4A8MS21AFSAA				
VFD7A5MS23ANSAA				
VFD7A5MS23ENSAA				
VFD1A5MS43AFSAA				
VFD2A7MS43AFSAA				
VFD4A2MS43ANSAA				
VFD4A2MS43ENSAA				
VFD4A2MS43AFSAA				

- If you install at Ta 45°C above environment, please select copper wire which have voltage rating 600V and temperature resistant 90°C or above.
- If you install at Ta 45°C environment, please select copper wire which have voltage rating 600V and temperature resistant 75°C or 90°C.
- For UL installation compliant, you have to use copper wires when installation, the wire gauge is based on temperature resistant 75°C which is according to the requirements and recommendations from UL. Do not reduce the wire gauge when using higher temperature wire.

Frame C

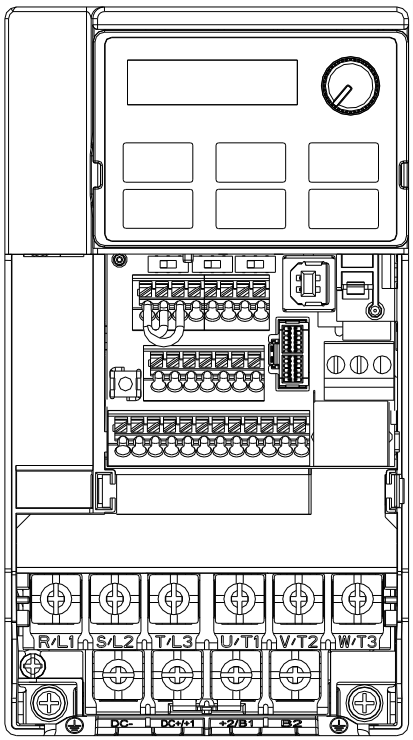

Main circuit terminals:
R/L1, S/L2, T/L3, U/T1, V/T2, W/T3, ⏚, DC-, DC+/+1, +2/B1, B2, ⏚

Note: 1-phase model with no T/L3 terminal

Models	Max. Wire Gauge	Min. Wire Gauge	Screw	Torque (±10%)
VFD4A8MS11ANSAA	8 AWG [8.4 mm^2]	10 AWG [5.3mm^2]	M4	20 kg-cm [17.4 lb-in.] [1.96 Nm]
VFD4A8MS11ENSAA				
VFD7A5MS21ANSAA				
VFD7A5MS21ENSAA				
VFD7A5MS21AFSAA				
VFD11AMS21ANSAA		8 AWG [8.4mm^2]		
VFD11AMS21ENSAA				
VFD11AMS21AFSAA				
VFD11AMS23ANSAA		12 AWG [3.3 mm^2]		
VFD11AMS23ENSAA				
VFD17AMS23ANSAA		10 AWG [5.3 mm^2]		
VFD17AMS23ENSAA				
VFD5A5MS43ANSAA		14 AWG [2.1 mm^2]		
VFD5A5MS43ENSAA				
VFD5A5MS43AFSAA				
VFD9A0MS43ANSAA				
VFD9A0MS43ENSAA				
VFD9A0MS43AFSAA				

- If you install at Ta 45°C above environment, please select copper wire which have voltage rating 600V and temperature resistant 90°C or above.
- If you install at Ta 45°C environment, please select copper wire which have voltage rating 600V and temperature resistant 75°C or 90°C.
- For UL installation compliant, you have to use copper wires when installation, the wire gauge is based on temperature resistant 75°C which is according to the requirements and recommendations from UL. Do not reduce the wire gauge when using higher temperature wire.

Frame D

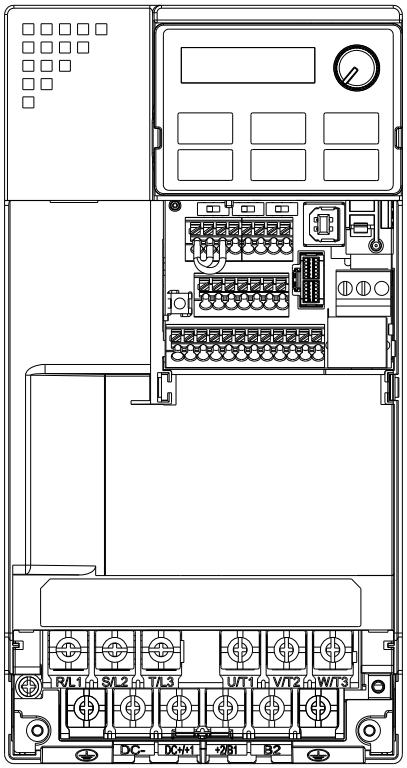

Main circuit terminals:

R/L1, S/L2, T/L3, U/T1, V/T2, W/T3, ⏚, DC-, DC+/+1, +2/B1, B2, ⏚

Models	Max. Wire Gauge	Min. Wire Gauge	Screw	Torque (±10%)
VFD25AMS23ANSAA	8 AWG [8.4mm^2]	8 AWG [8.4mm^2]	M4	20kg-cm [17.4 lb-in.] [1.96Nm]
VFD25AMS23ENSAA				
VFD13AMS43ANSAA		10 AWG [5.3mm^2]		
VFD13AMS43ENSAA				
VFD13AMS43AFSAA				
VFD17AMS43ANSAA				
VFD17AMS43ENSAA				
VFD17AMS43AFSAA				

- If you install at Ta 45°C above environment, please select copper wire which have voltage rating 600V and temperature resistant 90°C or above.
- If you install at Ta 45°C environment, please select copper wire which have voltage rating 600V and temperature resistant 75°C or 90°C.
- For UL installation compliant, you have to use copper wires when installation, the wire gauge is based on temperature resistant 75°C which is according to the requirements and recommendations from UL. Do not reduce the wire gauge when using higher temperature wire.

Frame E

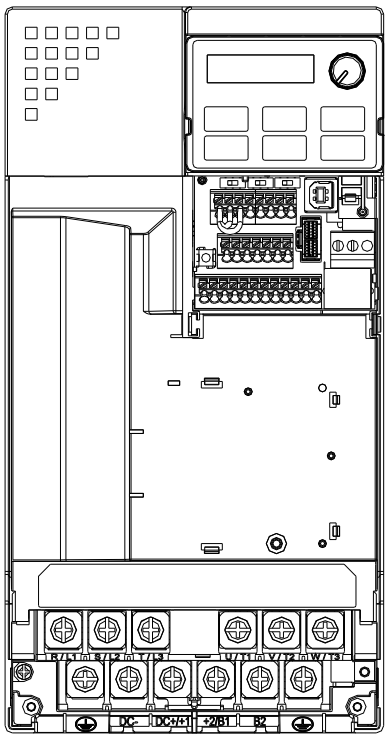

Main circuit terminals:
R/L1, S/L2, T/L3, U/T1, V/T2, W/T3, ⏚, DC-, DC+/+1, +2/B1, B2, ⏚

Models	Max. Wire Gauge	Min. Wire Gauge	Screw	Torque (±10%)
VFD33AMS23ANSAA	6 AWG [13.3 mm^2]	6 AWG [13.3 mm^2]	M5	25 kg-cm [21.7 lb-in.] [2.45 Nm]
VFD33AMS23ENSAA				
VFD49AMS23ANSAA**	4 AWG [21.2 mm^2]	4 AWG [21.2 mm^2]		
VFD49AMS23ENSAA**				
VFD25AMS43ANSAA	6 AWG [13.3 mm^2]	8 AWG [8.4 mm^2]		
VFD25AMS43ENSAA				
VFD25AMS43AFSAA				
VFD32AMS43ANSAA				
VFD32AMS43ENSAA				
VFD32AMS43AFSAA				

- If you install at Ta 45°C above environment, please select copper wire which have voltage rating 600V and temperature resistant 90°C or above.
- If you install at Ta 45°C environment, please select copper wire which have voltage rating 600V and temperature resistant 75°C or 90°C.
- For UL installation compliant, you have to use copper wires when installation, the wire gauge is based on temperature resistant 75°C which is according to the requirements and recommendations from UL. Do not reduce the wire gauge when using higher temperature wire.
- ** These drives must be wired with ring terminal that dimensions are specified.

Frame F

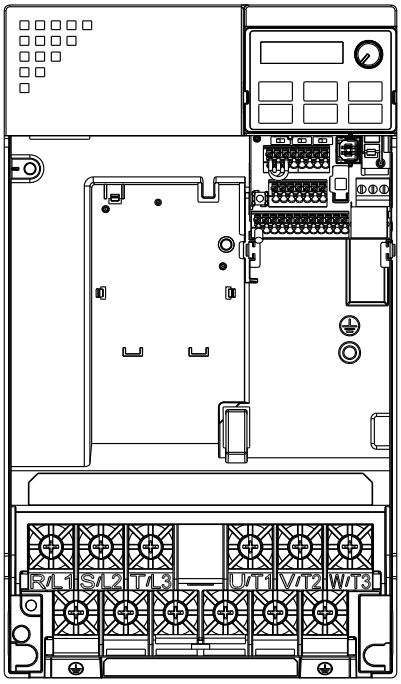

Main circuit terminals:
R/L1, S/L2, T/L3, U/T1, V/T2, W/T3, ⏚, DC-, DC+/+1, +2/B1, B2, ⏚

Models	Max. Wire Gauge	Min. Wire Gauge	Screw	Torque (±10%)
VFD65AMS23ANSAA	2 AWG [33.6 mm^2]	2 AWG [33.6 mm^2]	M6	40 kg-cm [34.7 lb-in.] [3.92 Nm]
VFD65AMS23ENSAA				
VFD38AMS43ANSAA		6 AWG [13.3 mm^2]		
VFD38AMS43ENSAA				
VFD38AMS43AFSAA				
VFD45AMS43ANSAA		4 AWG [21.2 mm^2]		
VFD45AMS43ENSAA				
VFD45AMS43AFSAA				

- If you install at Ta 45°C above environment, please select copper wire which have voltage rating 600V and temperature resistant 90° C or above.
- If you install at Ta 45°C environment, please select copper wire which have voltage rating 600V and temperature resistant 75°C or 90°C.
- For UL installation compliant, you have to use copper wires when installation, the wire gauge is based on temperature resistant 75°C which is according to the requirements and recommendations from UL. Do not reduce the wire gauge when using higher temperature wire.

[This page intentionally left blank]

Chapter 6 Control Terminals

CAUTION

Analog input terminals (AVI, ACI, ACM)

☑ Analog input signals are easily affected by external noise. Use shielded wiring and keep it as short as possible (<20 m) with proper grounding. If the noise is inductive, connecting the shield to terminal ACM can bring improvement.

☑ Use twisted-pair for weak analog signals.

☑ If the analog input signals are affected by noise from the drive, please connect a capacitor and ferrite core as indicated in the following diagram.

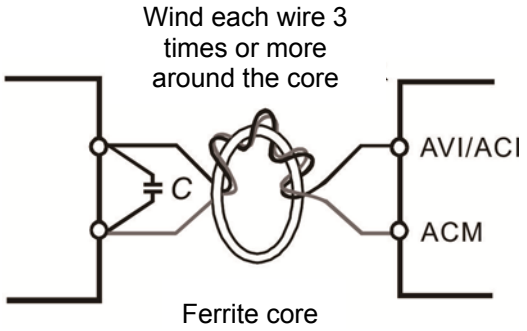

Contact input terminals（MI1~MI7, DCM, +24V）

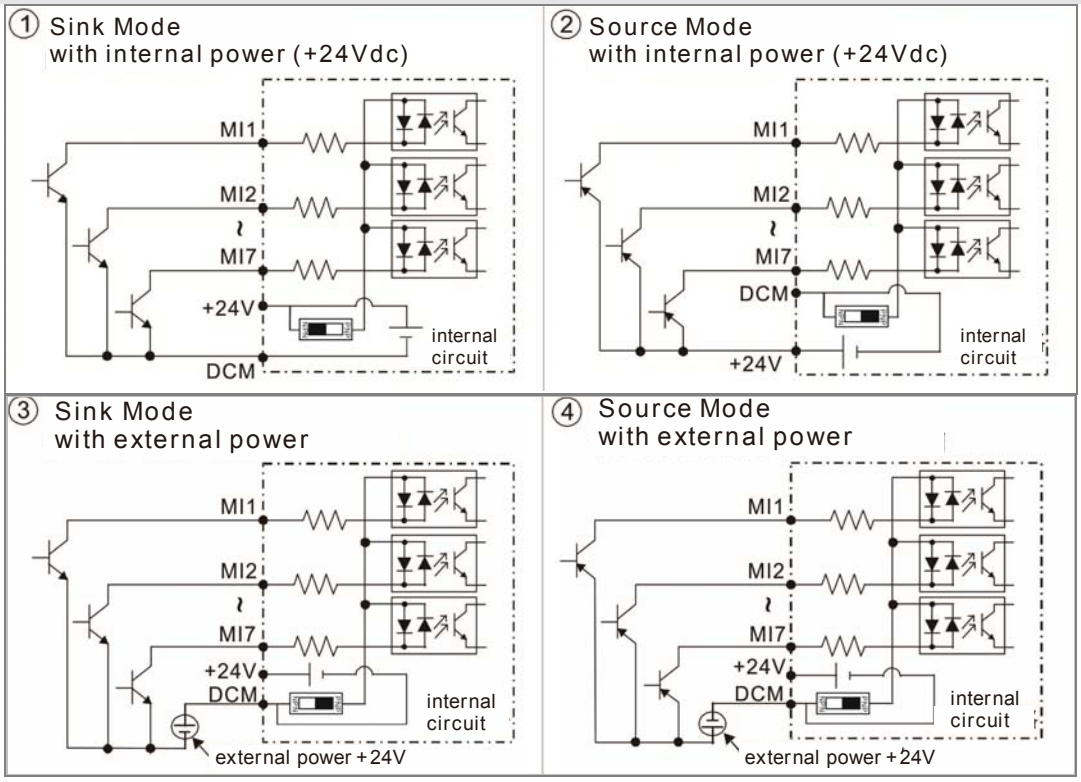

☑ When the photo-coupler is using internal power supply, the switch connection for Sink and Source as below: MI-DCM: Sink mode, MI-+24 V: Source mode

Transistor Output Terminal (MO1, MO2, MCM)

☑ Make sure to connect the digital outputs to the right polarity, see wiring diagram When connecting a relay to the digital output, connect a surge absorber across the coil and check the polarity.

Specifications of Control Terminal	**Specifications of RELAY Terminal**
Wire Gauge: 20~18AWG [0.519~0.82 mm^2]	Wire Gauge: 24~16 AWG [0.205~1.3 mm^2]; Torque: 5 kg-cm / [4.3 lb-in.] / [0.49 Nm]

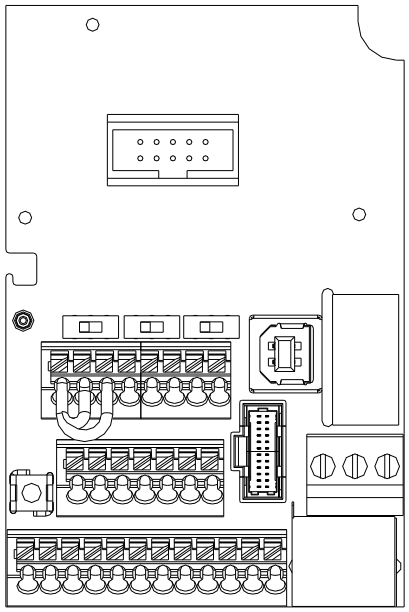

Distribution Diagram of Control Terminal

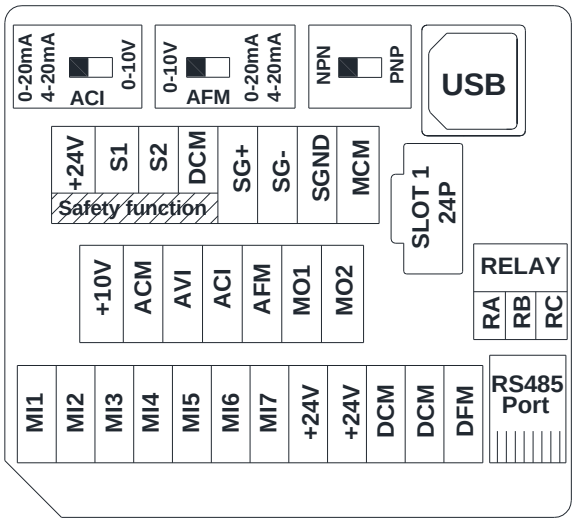

Location Map of Control Terminal

Wiring precautions:

- Delivery condition is +24V/ S1/ S2 shorted by jumper (as shown in figure above), please refer to Chapter 4 Wiring for more details.
- RELAY terminal is using PCB terminal block:
  1. Tighten the wiring with slotted screwdriver, which is 3.5mm (wide) x 0.6mm (thick)
  2. The ideal length of stripped wire at the connection side is 6~7mm.
  3. When wiring bare wires, make sure they are perfectly arranged to go through the wiring holes.
- Control terminal is using spring clamp terminal block:
  1. Tighten the wiring with slotted screwdriver, which is 2.5mm (wide) x 0.4mm (thick)
  2. The ideal length of stripped wire at the connection side is 9mm.
  3. When wiring bare wires, make sure they are perfectly arranged to go through the wiring holes.

Wiring Specifications of Control Terminal	Wire Gauge (AWG)	
	Min. Wire Gauge	Max. Wire Gauge
Conductor cross section solid	20 AWG [0.519 mm^2]	18 AWG [0.82 mm^2]
Conductor cross section stranded		
Stranded with ferrules with plastic sleeve		20 AWG [0.519 mm^2]

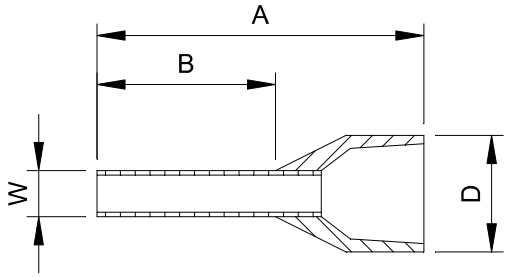

Ferrule: Type: AI 0,5 - 8 WH ,
Manufacturer: PHOENIX CONTACT

A	B	D (MAX)	W
14	8	3.5	1.4

Unit: mm

Terminals	Terminal Function	Factory Setting (NPN mode)
+24V	Digital control signal common (Source)	+24V ± 10 % 100 mA
MI1 ~ MI7	Multi-function input 1~7	Refer to parameters 02-01~02-07 to program the multi-function inputs MI1~MI7. Source Mode ON: the activation current is 3.3 mA≧11Vdc OFF: cut-off voltage≦5Vdc Sink Mode ON: the activation current is 3.3 mA ≦13Vdc OFF: cut-off voltage≧19Vdc ■ When Pr. 02-00=0, MI1 and MI2 can be programmed ■ When Pr. 02-00≠0, the function of MI1 and MI2 is acc. to Pr02-00 setting. ■ When Pr02-07=0, MI7 is pulse input with max. frequency 33kHz (See Pr. 10-00, Pr. 10-02, Pr. 10-16)
DFM	Digital frequency meter 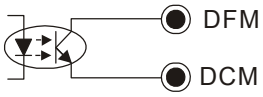	DFM is a pulse-signal output; Duty-cycle: 50% Min. load impedance R_L: 1kΩ/100pf Max. current: 30mA Max. capacitive load: 100pF Max. voltage: 30 Vdc ± 1 % (when 30 Vdc / 30 mA /R_L = 100 pf) Max. output frequency: 33kHz Internal current limiting resistor R: ≧1KΩ Output load impedance R_L Capacitive load≦100 pf Resistive load≧1 kΩ，resistance determine the output voltage value. DFM-DCM voltage = external voltage * (R_L/ (R_L+R))
DCM	Digital frequency signal common (Sink)	
MO1	Multi-function Output 1 (photocoupler)	Programmable open-collector outputs, see Pr. 02-16 and Pr. 02-17. 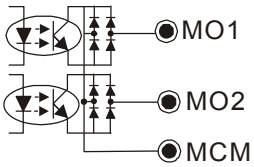
MO2	Multi-function Output 2 (photocoupler)	
MCM	Multi-function Output Common	Max 48 Vdc 50 mA
RA	Multi-function relay output 1 (Relay N.O. a)	Programmable relay output, see Pr. 02-13. Resistive Load 3 A (N.O.) / 3 A (N.C.) 250 VAC 5 A (N.O.) / 3 A (N.C.) 30 VDC Inductive Load (COS 0.4) 1.2 A (N.O.)/ 1.2 A (N.C.) 250 VAC 2.0 A (N.O.)/ 1.2 A (N.C.) 30 VDC Various kinds of monitor signals output, e.g.: operation、frequency attained、overload indication etc..
RB	Multi-function relay output 1 (Relay N.C. b)	
RC	Multi-function relay common (Relay)	

Terminals	Terminal Function	Factory Setting (NPN mode)
+10V	Potentiometer power supply	+10.5 ± 0.5 Vdc / 20 mA
AVI	Analog voltage input 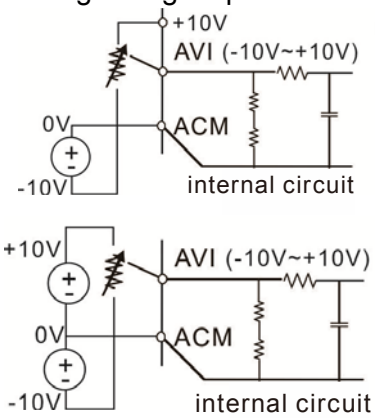 	Programmable analog input, see Pr. 03-00 Impedance: 20kΩ Range 0~Max. Output Frequency (Pr. 01-00): 0 ~ +10V / -10 ~ +10V Range switching by Pr. 03-00 , Pr. 03-28
ACI	Analog current input 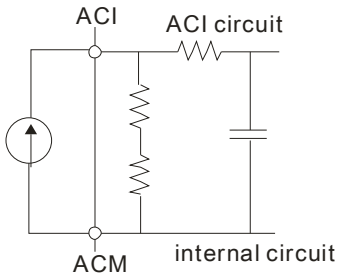 	Programmable analog input, see Pr. 03-01 Impedance: 250Ω Range 0~ Max. Output Frequency (Pr. 01-00): 0~20mA / 4~20mA / 0~10V Range switching by Pr. 03-01 , Pr. 03-29
AFM	Multi-function analog voltage output 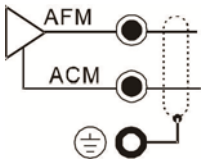 	Switch: the factory setting of AFM is 0~10V (Voltage mode), use the switch and Pr. 03-31 to change to current mode (0~20 mA / 4 mA~20 mA). Must follow the indication on the back side of front cover or page 6-1 of user manual when using the switch. Voltage mode Range: 0~10 V (Pr. 03-31=0) corresponding to the max. operating range of the control object Max. output current : 2 mA Max. Load : 5 kΩ Current mode Range : 0~20 mA (Pr. 03-31=1) / 4 mA~20 mA (Pr. 03-31=2) corresponding to the max. operating range of the control object Max. load : 500 Ω
ACM	Analog Signal Common	Common for analog terminals

<table>
<tr><th>Terminals</th><th>Terminal Function</th><th>Factory Setting (NPN mode)</th></tr>
<tr><td>S1,S2</td><td colspan="2" rowspan="2">Factory setting: S1/S2 shorted to +24V
Rated voltage: 24VDC ±10%; Max. voltage: 30VDC ±10%
Activation current: 6.67 mA ±10%
STO activation mode
Input voltage level: S1-DCM>0VDC or S2-DCM < 5VDC
STO response time ≤20ms (S1/S2 operate till the AC motor drive stop outputting current)
STO cut-off mode
Input voltage level: S1-DCM>11VDC and S2-DCM < 30VDC
Power removal safety function acc. to EN 954-1 and IEC / EN 61508
Note: Please refer to CH17 SAFE TORQUE OFF FUNCTION for more information.</td></tr>
<tr><td>DCM</td></tr>
<tr><td>SG+</td><td colspan="2" rowspan="3">Modbus RS-485
Note: Please refer to CH12 DESCRIPTION OF PARAMETER SETTINGS for more information. (Pr. 12-09-1 to Pr. 12-09-17)</td></tr>
<tr><td>SG-</td></tr>
<tr><td>SGND</td></tr>
<tr><td>RJ-45</td><td colspan="2">PIN 1, 2, 6: Reserved
PIN 3, 7: SGND
PIN 4: SG-
PIN 5: SG+
PIN 8: +10VS (provide KPC-CC01 power supply)</td></tr>
</table>

[This page intentionally left blank]

Chapter 7 Optional Accessories

7-1 All Brake Resistors and Brake Units Used in AC Motor Drives

7-2 Non-fuse Circuit Breaker

7-3 Fuse Specification Chart

7-4 AC/DC Reactor

7-5 Zero Phase Reactor

7-6 EMC Filter

7-7 EMC Shield Plate

7-8 Capacitive Filter

7-9 Conduit Box

7-10 Fan Kit

7-11 Keypad Panel Mounting

7-12 DIN-Rail Mounting

7-13 Mounting Adapter Plate

The optional accessories listed in this chapter are available upon request. Installing additional accessories to your drive would substantially improve the drive's performance. Please select an applicable accessory according to your need or contact the local distributor for suggestion.

7-1 All Brake Resistors and Brake Units Used in AC Motor Drives

115V 1-phase

Model	Applicable Motor		*1 125 % Braking Torque 10 % ED						*2 Max. Brake Torque		
	HP	KW	*3 Braking Torque (kg-m)	Resistor value spec. for each AC motor Drive	Braking Resistor for each Brake Unit			Braking Current (A)	Min. Resistor Value (Ω)	Max. Total Braking Current (A)	Peak Power (kW)
					*4 Part No.	Amount	Usage				
VFD1A6MS11XNSXX	0.25	0.2	0.1	80W 750Ω	BR080W750	1	-	0.5	190.0	2	0.8
VFD2A5MS11XNSXX	0.5	0.4	0.3	80W 200Ω	BR080W200	1	-	1.9	95.0	4	1.5
VFD4A8MS11XNSXX	1	0.75	0.5	80W 200Ω	BR080W200	1	-	1.9	63.3	6	2.3

230V 1-phase

Model	Applicable Motor		*1 125 % Braking Torque 10 % ED						*2 Max. Brake Torque		
	HP	KW	*3 Braking Torque (kg-m)	Resistor value spec. for each AC motor Drive	Braking Resistor for each Brake Unit			Braking Current (A)	Min. Resistor Value (Ω)	Max. Total Braking Current (A)	Peak Power (kW)
					*4 Part No.	Amount	Usage				
VFD1A6MS21XNSXX VFD1A6MS21AFSAA	0.25	0.2	0.1	80W 750Ω	BR080W750	1	-	0.5	190.0	2	0.8
VFD2A8MS21XNSXX VFD2A8MS21AFSAA	0.5	0.4	0.3	80W 200Ω	BR080W200	1	-	1.9	95.0	4	1.5
VFD4A8MS21XNSXX VFD4A8MS21AFSAA	1	0.75	0.5	80W 200Ω	BR080W200	1	-	1.9	63.3	6	2.3
VFD7A5MS21XNSXX VFD7A5MS21AFSAA	2	1.5	1	200W 91Ω	BR200W091	1	-	4.2	47.5	8	3.0
VFD11AMS21XNSXX VFD11AMS21AFSAA	3	2.2	1.5	300W 70Ω	BR300W070	1	-	5.4	38.0	10	3.8

230V 3-phase

Model	Applicable Motor		*1 125 % Braking Torque 10 % ED						*2 Max. Brake Torque		
	HP	KW	*3 Braking Torque (kg-m)	Resistor value spec. for each AC motor Drive	Braking Resistor for each Brake Unit			Braking Current (A)	Min. Resistor Value (Ω)	Max. Total Braking Current (A)	Peak Power (kW)
					*4 Part No.	Amount	Usage				
VFD1A6MS23XNSXX	0.25	0.2	0.1	80W 750Ω	BR080W750	1	-	0.5	190.0	2	0.8
VFD2A8MS23XNSXX	0.5	0.4	0.3	80W 200Ω	BR080W200	1	-	1.9	95.0	4	1.5
VFD4A8MS23XNSXX	1	0.75	0.5	80W 200Ω	BR080W200	1	-	1.9	63.3	6	2.3
VFD7A5MS23XNSXX	2	1.5	1	200W 91Ω	BR200W091	1	-	4.2	47.5	8	3.0
VFD11AMS23XNSXX	3	2.2	1.5	300W 70Ω	BR300W070	1	-	5.4	38.0	10	3.8
VFD17AMS23XNSXX	5	3.7	2.5	400W 40Ω	BR400W040	1	-	9.5	19.0	20	7.6
VFD25AMS23XNSXX	7.5	5.5	3.7	1000W 20Ω	BR1K0W020	1	-	19	16.5	23	8.7
VFD33AMS23XNSXX	10	7.5	5.1	1000W 20Ω	BR1K0W020	1	-	19	14.6	26	9.9
VFD49AMS23XNSXX	15	11	7.4	1500W 13Ω	BR1K5W013	1	-	29	12.6	29	11.0
VFD65AMS23XNSXX	20	15	10.2	2000W 8.6Ω	BR1K0W4P3	2	2 in series	44	8.3	46	17.5

460V 3-phase

Model	Applicable Motor		*1 125 % Braking Torque 10 % ED						*2 Max. Brake Torque		
	HP	KW	*3 Braking Torque (kg-m)	Resistor value spec. for each AC motor Drive	Braking Resistor for each Brake Unit			Braking Current (A)	Min. Resistor Value (Ω)	Max. Total Braking Current (A)	Peak Power (kW)
					*4 Part No.	Amount	Usage				
VFD1A5MS43XNSXX VFD1A5MS43AFSAA	0.5	0.4	0.3	80W 750Ω	BR080W750	1		1	380.0	2	1.5
VFD2A7MS43XNSXX VFD2A7MS43AFSAA	1	0.75	0.5	80W 750Ω	BR080W750	1		1	190.0	4	3.0
VFD4A2MS43XNSXX VFD4A2MS43AFSAA	2	1.5	1	200W 360Ω	BR200W360	1		2.1	126.7	6	4.6
VFD5A5MS43XNSXX VFD5A5MS43AFSAA	3	2.2	1.5	300W 250Ω	BR300W250	1		3	108.6	7	5.3
VFD9A0MS43XNSXX VFD9A0MS43AFSAA	5	3.7	2.5	400W 150Ω	BR400W150	1		5.1	84.4	9	6.8
VFD13AMS43XNSXX VFD13AMS43AFSAA	7.5	5.5	3.7	1000W 75Ω	BR1K0W075	1		10.2	50.7	15	11.4
VFD17AMS43XNSXX VFD17AMS43AFSAA	10	7.5	5.1	1000W 75Ω	BR1K0W075	1		10.2	40.0	19	14.4
VFD25AMS43XNSXX VFD25AMS43AFSAA	15	11	7.4	1500W 43Ω	BR1K5W043	1		17.6	33.0	23	17.5
VFD32AMS43XNSXX VFD32AMS43AFSAA	20	15	10.2	2000W 32Ω	BR1K0W016	2	2 in series	24	26.2	29	22.0
VFD38AMS43XNSXX VFD38AMS43AFSAA	25	18	12.2	2000W 32Ω	BR1K0W016	2	2 in series	24	26.2	29	22.0
VFD45AMS43XNSXX VFD45AMS43AFSAA	30	22	14.9	3000W 26Ω	BR1K5W013	2	2 in series	29	23.0	33	25.1

*1 Standard braking torque is 125 %. Because of the limited resistor power, the longest operation time for 10% ED is 10sec. (on: 10 sec. / off: 90 sec.).
*2 Please refer to the Brake Performance Curve for "Operation Duration & ED (%)" vs. "Braking Current".
*3 Calculation for braking torque is for a 4-pole motor 1800 rpm.
*4 Resistors of 400W or lower should be fixed to the frame and at a surface temperature below 50°C.
Resistors of 1000W and above should be fixed on a surface with temperature below 350°C

NOTE

1. Please select the resistance value, power and brake usage (ED %) acc. to Delta rules.

   Definition for Brake Usage ED%

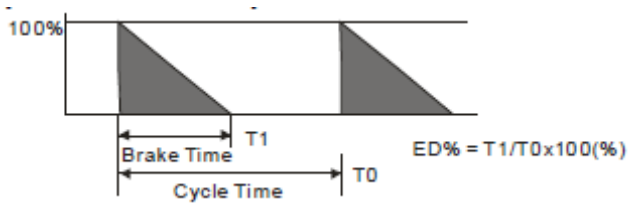

Explanation: ED (%) is defined to allow enough time for the brake unit and brake resistor to dissipate the heat generated by braking. Recommended cycle time T0 is one minute.

For safety concern, install a thermal overload relay (O.L) between the brake unit and the brake resistor in conjunction with the magnetic contactor (MC) before to the drive for additional protection. The purpose of the thermal overload relay is to protect the brake resistor from damage due to frequent or continuous braking. Under such circumstances, just turn off the power to prevent damaging the brake resistor, brake unit and drive.

2. If the drive or other equipment is damaged due to the fact that the brake resistors and brake modules in use are not provided by Delta, warranty will be void.

3. Take the safety of the environment into consideration when installing the brake resistors. If the minimum resistance value is to be used, consult local dealers for the calculation of the power.
4. When using more than 2 brake units, equivalent resistor value of parallel brake unit can't be less than the value in the column "Minimum Equivalent Resistor Value for Each AC Drive" (the right-most column in the table). Please read the wiring information in the user manual of brake unit thoroughly prior to operation
5. Thermal Overload Relay (TOR):

   To choose a thermal overload relay is based on its overload capacity whether is appropriate to MS300. The standard braking capacity of MS300 is 10% ED (Tripping time=10s). As shown in the figure below, thermal overload relay continuously operates for 10 sec. and it can stand 260% overload (Host starting). Take a 460V, 15kW of MS300 as an example, its braking current is 24A (refer to the table on page 7-3), thus it can use the thermal overload relay which rated current is 10A (10*260%=26A > 24A).

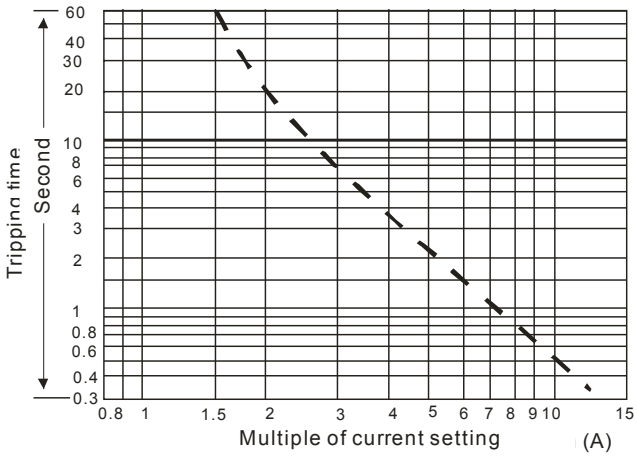

7-2 Non-fuse Circuit Breaker

Comply with UL standard: Per UL 508, paragraph 45.8.4, part a.

Model	Voltage / 1-phase (3-phase)	Current Input / Output (Max.)		Breaker rating Input (A)	
		Normal duty	Heavy duty	Normal duty	Heavy duty
VFD1A6MS11ANSXX VFD1A6MS11ENSXX	115V / 1φ	6.8 A / 1.8 A	6.0 A / 1.6 A	17.68	20
VFD2A5MS11ANSXX VFD2A5MS11ENSXX		10.1 A / 2.7 A	9.4 A / 2.5 A	26.26	25
VFD4A8MS11ANSXX VFD4A8MS11ENSXX		20.6 A / 5.5 A	18.0 A / 4.8 A	53.56	50
VFD1A6MS21ANSXX VFD1A6MS21ENSXX VFD1A6MS21AFSXX	230V / 1φ	3.8 A / 1.8 A	3.4 A / 1.6 A	9.88	15
VFD2A8MS21ANSXX VFD2A8MS21ENSXX VFD2A8MS21AFSXX		6.7 A / 3.2 A	5.9 A / 2.8 A	17.42	20
VFD4A8MS21ANSXX VFD4A8MS21ENSXX VFD4A8MS21AFSXX		10.5 A / 5.0 A	10.1 A / 4.8 A	27.3	30
VFD7A5MS21ANSXX VFD7A5MS21ENSXX VFD7A5MS21AFSXX		17.9 A / 8.5 A	15.8 A / 7.5 A	46.54	45
VFD11AMS21ANSXX VFD11AMS21ENSXX VFD11AMS21AFSXX		26.3 A / 12.5 A	23.1 A / 11.0 A	68.38	70
VFD1A6MS23ANSXX VFD1A6MS23ENSXX	230V / 3φ	2.2 A / 1.8 A	1.9 A / 1.6 A	5.72	15
VFD2A8MS23ANSXX VFD2A8MS23ENSXX		3.8 A / 3.2 A	3.4 A / 2.8 A	9.88	15
VFD4A8MS23ANSXX VFD4A8MS23ENSXX		6.0 A / 5.0 A	5.8 A / 4.8 A	15.6	15
VFD7A5MS23ANSXX VFD7A5MS23ENSXX		9.6 A / 8.0 A	9.0 A / 7.5 A	24.96	25
VFD11AMS23ANSXX VFD11AMS23ENSXX		15.0 A / 12.5 A	13.2 A / 11.0 A	39	40
VFD17AMS23ANSXX VFD17AMS23ENSXX		23.4 A / 19.5 A	20.4 A / 17.0 A	60.84	60
VFD25AMS23ANSXX VFD25AMS23ENSXX		32.4 A / 27.0 A	30.0 A / 25.0 A	64.8	63
VFD33AMS23ANSXX VFD33AMS23ENSXX		43.2 A / 36.0 A	39.6 A / 33.0 A	86.4	90
VFD49AMS23ANSXX VFD49AMS23ENSXX		61.2 A / 51.0 A	58.8 A / 49.0 A	122.4	125
VFD65AMS23ANSXX VFD65AMS23ENSXX		30.8 A / 28.0 A	27.5 A / 25.0 A	165.6	160
VFD1A5MS43ANSXX VFD1A5MS43ENSXX VFD1A5MS43AFSXX	460V / 3φ	2.5 A / 1.8 A	2.1 A / 1.5 A	5.2	15

Model	Voltage / 1-phase (3-phase)	Current Input / Output (Max.)		Breaker rating Input (A)	
		Normal duty	Heavy duty	Normal duty	Heavy duty
VFD2A7MS43ANSXX VFD2A7MS43ENSXX VFD2A7MS43AFSXX	460V / 3φ	4.2 A / 3.0 A	3.7 A / 2.7 A	8.58	15
VFD4A2MS43ANSXX VFD4A2MS43ENSXX VFD4A2MS43AFSXX		6.4 A / 4.6 A	5.8 A / 4.2 A	13.26	15
VFD5A5MS43ANSXX VFD5A5MS43ENSXX VFD5A5MS43AFSXX		7.2 A / 6.5 A	6.1 A / 5.5 A	18.72	20
VFD9A0MS43ANSXX VFD9A0MS43ENSXX VFD9A0MS43AFSXX		11.6 A / 10.5 A	9.9 A / 9.0 A	30.16	30
VFD13AMS43ANSXX VFD13AMS43ENSXX VFD13AMS43AFSXX		17.3 A / 15.7 A	14.3 A / 13.0 A	34.6	32
VFD17AMS43ANSXX VFD17AMS43ENSXX VFD17AMS43AFSXX		22.6 A / 20.5 A	18.7 A / 17.0 A	45.2	45
VFD25AMS43ANSXX VFD25AMS43ENSXX VFD25AMS43AFSXX		30.8 A / 28.0 A	27.5 A / 25.0 A	61.6	60
VFD32AMS43ANSXX VFD32AMS43ENSXX VFD32AMS43AFSXX		39.6 A / 36.0 A	35.2 A / 32.0 A	79.2	80
VFD38AMS43ANSXX VFD38AMS43ENSXX VFD38AMS43AFSXX		45.7 A / 41.5 A	41.8 A / 38.0 A	91.4	90
VFD45AMS43ANSXX VFD45AMS43ENSXX VFD45AMS43AFSXX		53.9 A / 49.0 A	49.5 A / 45.0 A	107.8	100

7-3 Fuse Specification Chart

- ☑ The fuse specifications lower than below table is allowed.
- ☑ For installation in the United States, branch circuit protection must be provided in accordance with the National Electrical Code (NEC) and any applicable local codes. To fulfill this requirement, use the UL classified fuses.
- ☑ For installation in Canada, branch circuit protection must be provided in accordance with Canadian Electrical Code and any applicable provincial codes. To fulfill this requirement, use the UL classified fuses.

Model	Voltage/ 1-phase (3-phase)	Current Input / Output (Max.)		Branch Circuit Fuses Output (A)
		Normal duty	Heavy duty	
VFD1A6MS11ANSXX VFD1A6MS11ENSXX	115V / 1φ	6.8 A / 1.8 A	6.0 A / 1.6 A	7.2 Class T JJS-10
VFD2A5MS11ANSXX VFD2A5MS11ENSXX		10.1 A / 2.7 A	9.4 A / 2.5 A	10.8 Class T JJS-10
VFD4A8MS11ANSXX VFD4A8MS11ENSXX		20.6 A / 5.5 A	18.0 A / 4.8 A	22 Class T JJS-25
VFD1A6MS21ANSXX VFD1A6MS21ENSXX VFD1A6MS21AFSXX	230V / 1φ	3.8 A / 1.8 A	3.4 A / 1.6 A	7.2 Class T JJS-10
VFD2A8MS21ANSXX VFD2A8MS21ENSXX VFD2A8MS21AFSXX		6.7 A / 3.2 A	5.9 A / 2.8 A	12.8 Class T JJS-15
VFD4A8MS21ANSXX VFD4A8MS21ENSXX VFD4A8MS21AFSXX		10.5 A / 5.0 A	10.1 A / 4.8 A	20 Class T JJS-20
VFD7A5MS21ANSXX VFD7A5MS21ENSXX VFD7A5MS21AFSXX		17.9 A / 8.5 A	15.8 A / 7.5 A	34 Class T JJS-35
VFD11AMS21ANSXX VFD11AMS21ENSXX VFD11AMS21AFSXX		26.3 A / 12.5 A	23.1 A / 11.0 A	50 Class T JJS-50
VFD1A6MS23ANSXX VFD1A6MS23ENSXX	230V / 3φ	2.2 A / 1.8 A	1.9 A / 1.6 A	7.2 Class T JJS-10
VFD2A8MS23ANSXX VFD2A8MS23ENSXX		3.8 A / 3.2 A	3.4 A / 2.8 A	12.8 Class T JJS-15
VFD4A8MS23ANSXX VFD4A8MS23ENSXX		6.0 A / 5.0 A	5.8 A / 4.8 A	20 Class T JJS-20
VFD7A5MS23ANSXX VFD7A5MS23ENSXX		9.6 A / 8.0 A	9.0 A / 7.5 A	32 Class T JJS-35
VFD11AMS23ANSXX VFD11AMS23ENSXX		15.0 A / 12.5 A	13.2 A / 11.0 A	50 Class T JJS-50
VFD17AMS23ANSXX VFD17AMS23ENSXX		23.4 A / 19.5 A	20.4 A / 17.0 A	78 Class T JJS-80
VFD25AMS23ANSXX VFD25AMS23ENSXX		32.4 A / 27.0 A	30.0 A / 25.0 A	59.4 Class T JJS-60

Model	Voltage/ 1-phase (3-phase)	Current Input / Output (Max.)		Branch Circuit Fuses Output (A)
		Normal duty	Heavy duty	
VFD33AMS23ANSXX VFD33AMS23ENSXX		43.2 A / 36.0 A	39.6 A / 33.0 A	79.2 Class T JJS-80
VFD49AMS23ANSXX VFD49AMS23ENSXX		61.2 A / 51.0 A	58.8 A / 49.0 A	112.2 Class T JJS-110
VFD65AMS23ANSXX VFD65AMS23ENSXX		82.8 A / 69.0 A	78.0 A / 65.0 A	151.8 Class T JJS-150
VFD1A5MS43ANSXX VFD1A5MS43ENSXX VFD1A5MS43AFSXX	460V / 3φ	2.5 A / 1.8 A	2.1 A / 1.5 A	7.2 Class T JJS-10
VFD2A7MS43ANSXX VFD2A7MS43ENSXX VFD2A7MS43AFSXX		4.2 A / 3.0 A	3.7 A / 2.7 A	12 Class T JJS-15
VFD4A2MS43ANSXX VFD4A2MS43ENSXX VFD4A2MS43AFSXX		6.4 A / 4.6 A	5.8 A / 4.2 A	18.4 Class T JJS-20
VFD5A5MS43ANSXX VFD5A5MS43ENSXX VFD5A5MS43AFSXX		7.2 A / 6.5 A	6.1 A / 5.5 A	26 Class T JJS-25
VFD9A0MS43ANSXX VFD9A0MS43ENSXX VFD9A0MS43AFSXX		11.6 A / 10.5 A	9.9 A / 9.0 A	42 Class T JJS-45
VFD13AMS43ANSXX VFD13AMS43ENSXX VFD13AMS43AFSXX		17.3 A / 15.7 A	14.3 A / 13.0 A	34.54 Class T JJS-35
VFD17AMS43ANSXX VFD17AMS43ENSXX VFD17AMS43AFSXX		22.6 A / 20.5 A	18.7 A / 17.0 A	45.1 Class T JJS-45
VFD25AMS43ANSXX VFD25AMS43ENSXX VFD25AMS43AFSXX		30.8 A / 28.0 A	27.5 A / 25.0 A	61.6 Class T JJS-60
VFD32AMS43ANSXX VFD32AMS43ENSXX VFD32AMS43AFSXX		39.6 A / 36.0 A	35.2 A / 32.0 A	79.2 Class T JJS-80
VFD38AMS43ANSXX VFD38AMS43ENSXX VFD38AMS43AFSXX		45.7 A / 41.5 A	41.8 A / 38.0 A	91.3 Class T JJS-90
VFD45AMS43ANSXX VFD45AMS43ENSXX VFD45AMS43AFSXX		53.9 A / 49.0 A	49.5 A / 45.0 A	107.8 Class T JJS-110

7-4 AC/DC Reactor

Installing an AC reactor in the input side of AC motor drive can increase line impedance, improve power factor, reduce input current, and reduce interference generated from motor drive. Also momentary voltage surges or abnormal current spikes are reduced. For example, when the mains power capacity is higher than 500 kVA, or a switching capacitor bank is used, momentary voltage and current spikes may damage the AC motor drive's internal circuit. An AC reactor in the input side of the AC motor drive protects it by suppressing surges.

Installation

An AC input reactor is installed in series with the mains power to the three input phases R S T as shown below:

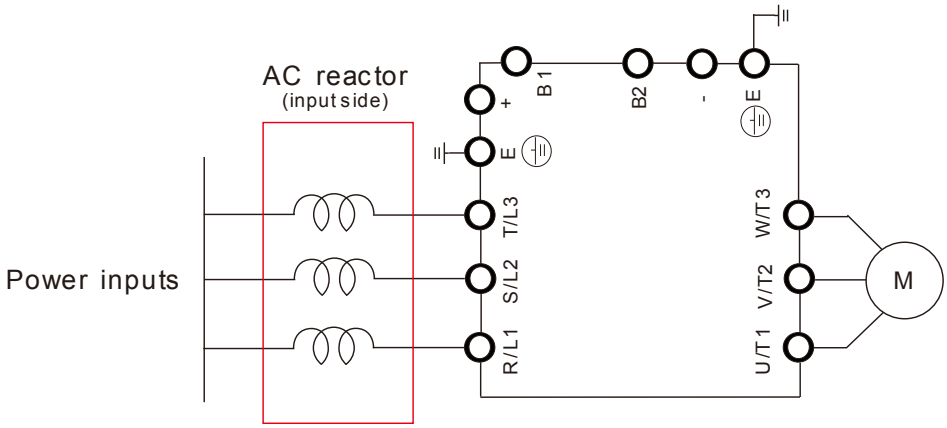

Connecting an AC input reactor

115V / 1ø Normal duty / Heavy duty

115V / 50~60 Hz MS Series Normal Duty / Heavy Duty Input AC Reactor						
Model	Rated Current ND / HD (A_{rms})	Saturation ND / HD Current (A_{rms})	Input/ Output Reactor (mH)	Input Reactor Delta Part #	DC Reactor (mH)	DC Reactor Delta Part #
VFD1A6MS11ANSAA VFD1A6MS11ENSAA	1.8 / 1.6	2.7 / 3.2	5.857	DR005D0585	5.857	DR005D0585
VFD2A5MS11ANSAA VFD2A5MS11ENSAA	2.7 / 2.5	4.05 / 5	5.857	DR005D0585	5.857	DR005D0585
VFD4A8MS11ANSAA VFD4A8MS11ENSAA	5.5 / 5	8.25 / 9.6	3.66	DR008D0366	3.66	DR008D0366

230V / 1ø Normal duty / Heavy duty

230V / 50~60Hz MS Series Normal Duty / Heavy Duty Input AC Reactor						
Model	Rated Current ND / HD (A_{rms})	Saturation ND / HD Current (A_{rms})	Input/ Output Reactor (mH)	Input Reactor Delta Part #	DC Reactor (mH)	DC Reactor Delta Part #
VFD1A6MS21ANSAA VFD1A6MS21ENSAA VFD1A6MS21AFSAA	1.8 / 1.6	2.7 / 3.2	14.031	DR004D1403	14.031	DR004D1403
VFD2A8MS21ANSAA VFD2A8MS21ENSAA VFD2A8MS21AFSAA	3.2 / 2.8	4.8 / 5.6	5.857	DR005D0585	5.857	DR005D0585

230V / 50~60Hz MS Series Normal Duty / Heavy Duty Input AC Reactor						
Model	Rated Current ND / HD (A_{rms})	Saturation ND / HD Current (A_{rms})	Input/ Output Reactor (mH)	Input Reactor Delta Part #	DC Reactor (mH)	DC Reactor Delta Part #
VFD4A8MS21ANSAA VFD4A8MS21ENSAA VFD4A8MS21AFSAA	5 / 4.8	7.5 / 9.6	3.66	DR008D0366	3.66	DR008D0366
VFD7A5MS21ANSAA VFD7A5MS21ENSAA VFD7A5MS21AFSAA	8.5 / 7.5	12.75 / 15	2.662	DR011D0266	2.662	DR011D0266
VFD11AMS21ANSAA VFD11AMS21ENSAA VFD11AMS21AFSAA	12.5 / 11	18.75 / 22	1.722	DR017D0172	1.722	DR017D0172

230V / 3ø Phase Normal Duty / Heavy Duty

230V / 50~60Hz MS Series Normal Duty / Heavy Duty Input AC Reactor						
Model	Rated Current ND / HD (A_{rms})	Saturation ND / HD Current (A_{rms})	Input/ Output Reactor (mH)	Input Reactor Delta Part #	DC Reactor (mH)	DC Reactor Delta Part #
VFD1A6MS23ANSAA VFD1A6MS23ENSAA	1.8 / 1.6	2.7 / 3.2	2.536	DR005A0254	5.857	DR005D0585
VFD2A8MS23ANSAA VFD2A8MS23ENSAA	3.2 / 2.8	4.8 / 5.6	2.536	DR005A0254	5.857	DR005D0585
VFD4A8MS23ANSAA VFD4A8MS23ENSAA	5 / 4.8	7.5 / 9.6	2.536	DR005A0254	5.857	DR005D0585
VFD7A5MS23ANSAA VFD7A5MS23ENSAA	8 / 7.5	12 / 15	1.585	DR008A0159	3.66	DR008D0366
VFD11AMS23ANSAA VFD11AMS23ENSAA	12.5 / 11	18.75 / 22	0.746	DR017AP746	2.662	DR011D0266
VFD17AMS23ANSAA VFD17AMS23ENSAA	19.5 / 17	29.25 / 34	0.507	DR025AP507	1.722	DR017D0172
VFD25AMS23ANSAA VFD25AMS23ENSAA	27 / 25	40.5 / 50	0.32	DR033AP320	1.172	DR025D0117
VFD33AMS23ANSAA VFD33AMS23ENSAA	36 / 33	54 / 66	0.216	DR049AP215	0.851	DR033DP851
VFD49AMS23ANSAA VFD49AMS23ENSAA	51 / 46	76.5 / 92	0.216	DR049AP215	0.574	DR049DP574
VFD65AMS23ANSAA VFD65AMS23ENSAA	69 / 65	103.5 / 130	0.169	DR075AP170	0.432	DR065DP432

460V /3ø Normal Duty / Heavy Duty

460V/ 50~60Hz MS Series Normal Duty Input AC Reactor						
Model	Rated Current ND / HD (A_{rms})	Saturation ND / HD Current (A_{rms})	Input/ Output Reactor (mH)	Input Reactor Delta Part #	DC Reactor (mH)	DC Reactor Delta Part #
VFD1A5MS43ANSAA VFD1A5MS43ENSAA VFD1A5MS43AFSAA	1.8 / 1.5	2.7 / 3	8.102	DR003A0810	18.709	DR003D1870

460V/ 50~60Hz MS Series Normal Duty Input AC Reactor						
Model	Rated Current ND / HD (A_{rms})	Saturation ND / HD Current (A_{rms})	Input/ Output Reactor (mH)	Input Reactor Delta Part #	DC Reactor (mH)	DC Reactor Delta Part #
VFD2A7MS43ANSAA VFD2A7MS43ENSAA VFD2A7MS43AFSAA	3 / 2.7	4.5 / 5.4	6.077	DR004A0607	18.709	DR003D1870
VFD4A2MS43AFSAA VFD4A2MS43ANSAA VFD4A2MS43ENSAA	4.6 / 4.2	6.9 / 8.4	4.05	DR006A0405	14.031	DR004D1403
VFD5A5MS43AFSAA VFD5A5MS43ANSAA VFD5A5MS43ENSAA	6.5 / 5.5	9.75 / 11	2.7	DR009A0270	9.355	DR006D0935
VFD9A0MS43AFSAA VFD9A0MS43ANSAA VFD9A0MS43ENSAA	10.5 / 9	15.75 / 18	2.315	DR010A0231	5.345	DR010D0534
VFD13AMS43AFSAA VFD13AMS43ANSAA VFD13AMS43ENSAA	15.7 / 13	23.55 / 26	1.174	DR018A0117	3.119	DR018D0311
VFD17AMS43AFSAA VFD17AMS43ANSAA VFD17AMS43ENSAA	20.5 / 17	30.75 / 34	0.881	DR024AP881	3.119	DR018D0311
VFD25AMS43AFSAA VFD25AMS43ANSAA VFD25AMS43ENSAA	28 / 25	42 / 50	0.66	DR032AP660	2.338	DR024D0233
VFD32AMS43AFSAA VFD32AMS43ANSAA VFD32AMS43ENSAA	36 / 32	54 / 64	0.639	DR038AP639	1.754	DR032D0175
VFD38AMS43AFSAA VFD38AMS43ANSAA VFD38AMS43ENSAA	41.5 / 38	62.25 / 76	0.541	DR045AP541	1.477	DR038D0147
VFD45AMS43AFSAA VFD45AMS43ANSAA VFD45AMS43ENSAA	49 / 45	73.5 / 90	0.405	DR060AP405	1.247	DR045D0124

AC input reactor dimension and specification:

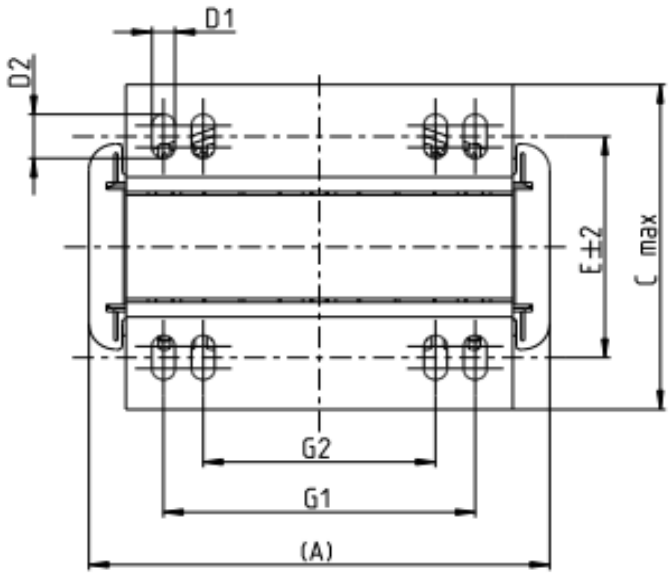

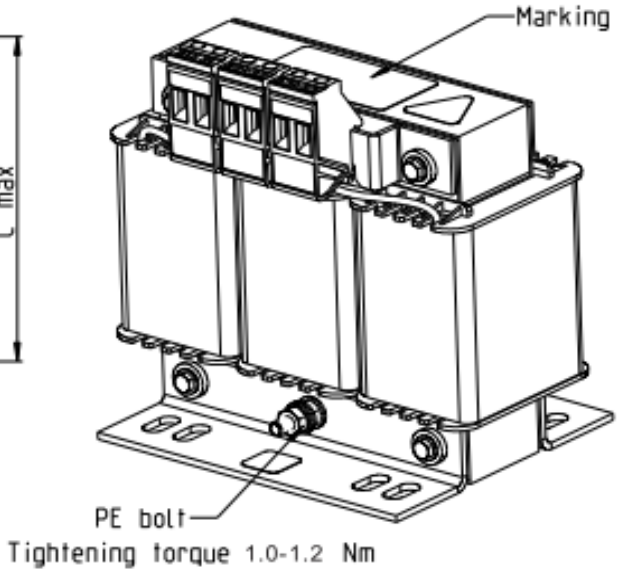

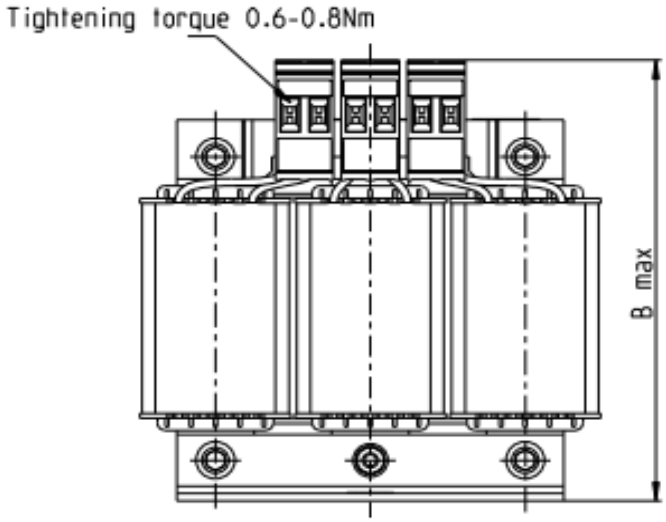

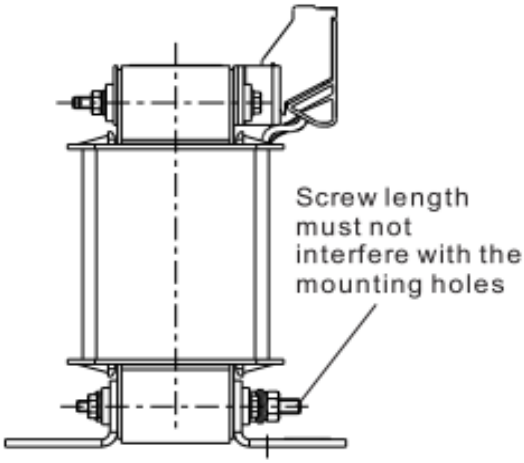

Screw Location	Torque
Terminal	5.32~7.09 kg-cm / [6.12~8.16 lb-in.] / [0.6~0.8 Nm]
PE bolt	8.86~10.63 kg-cm / [10.2~12.24 lb-in.] / [1.0~1.2 Nm]

Input AC reactor Delta part #	A	B	C	D1*D2	E	G1	G2	PE D
DR005A0254	96	100	60	6*9	42	60	40	M4
DR008A0159	120	120	88	6*12	60	80.5	60	M4
DR011A0115	120	120	88	6*12	60	80.5	60	M4
DR017AP746	120	120	93	6*12	65	80.5	60	M4
DR025AP507	150	150	112	6*12	88	107	75	M4
DR033AP320	150	150	112	6*12	88	107	75	M4

Unit：mm

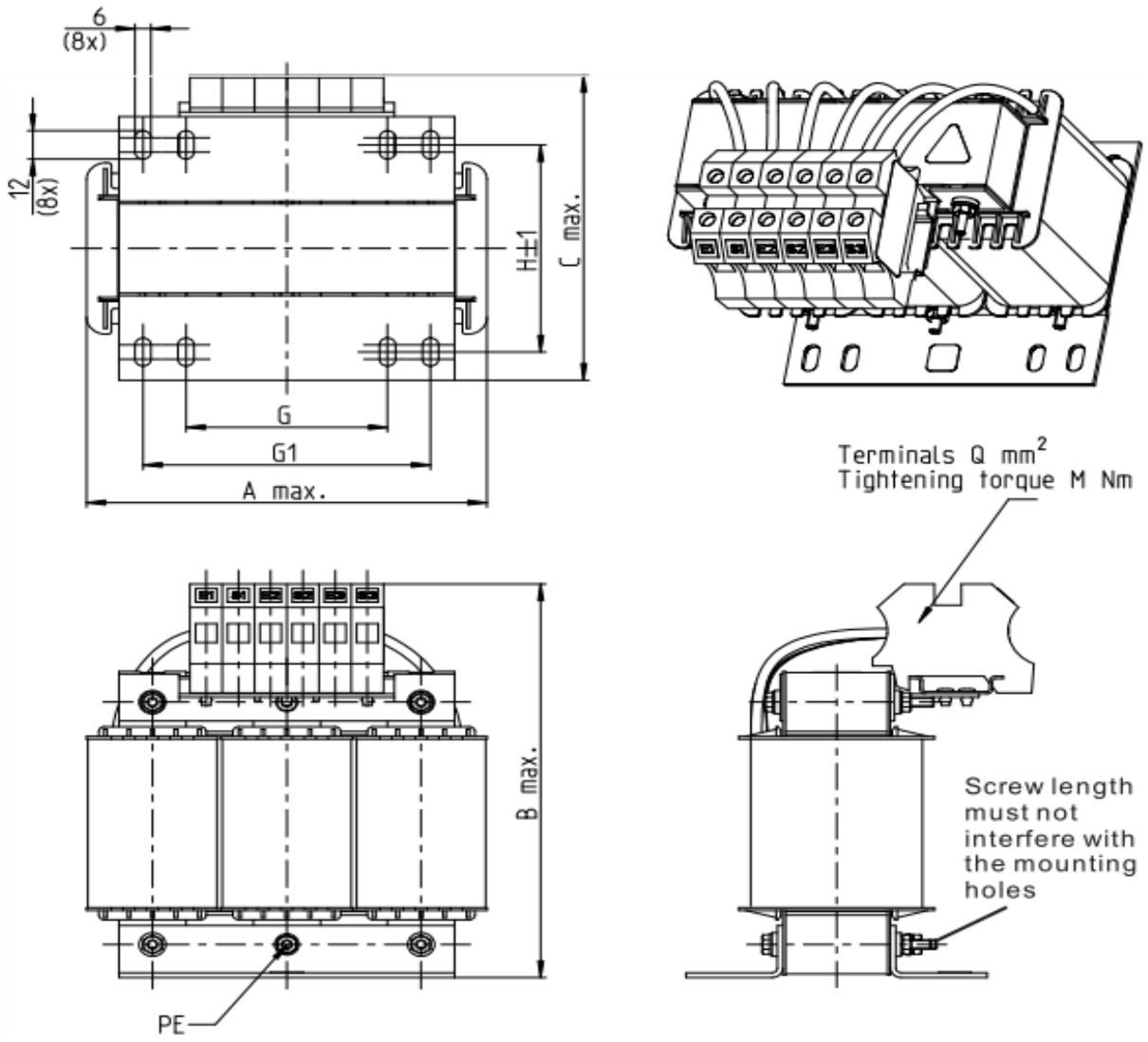

Screw Location	Torque
Terminal	10.63~12.4 kg-cm / [12.24~14.28 lb-in.] / [1.2~1.4 Nm]

Input AC reactor Delta part #	A	B	C	D1*D2	H	G	G1	Q	M	PE D
DR049AP215	180	195	160	6*12	115	85	122	16	1.2~1.4	M4
DR065AP163	180	205	160	6*12	115	85	122	35	2.5~3.0	M4

Unit：mm

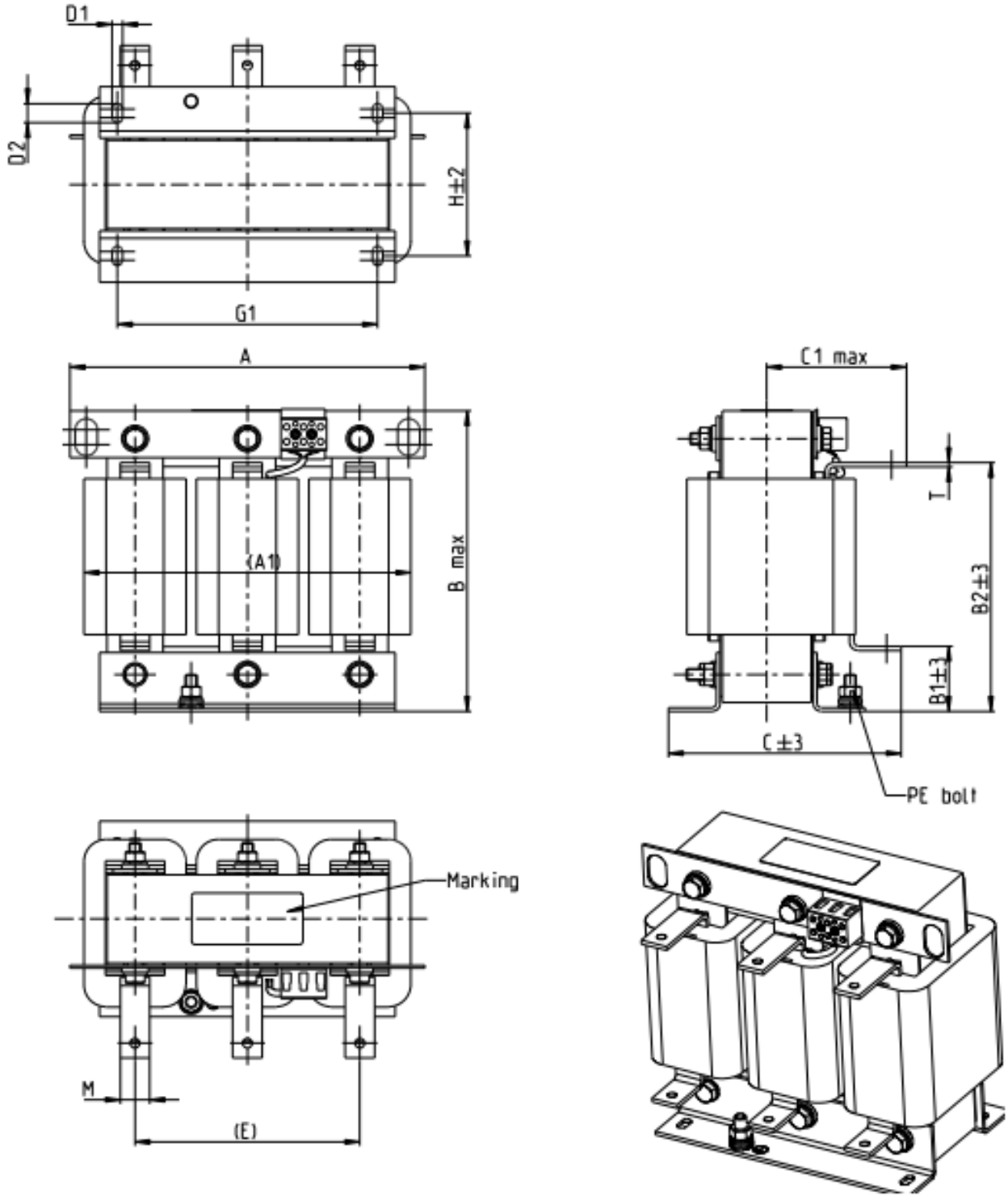

Input AC reactor Delta part #	A	A1	B	B1	B2	C	C1	D1*D2	E	G1	H	M*T	PE
DR075AP170	240	220	205	42	165	151	95	7*13	152	176	85	20*3	M8

Unit：mm

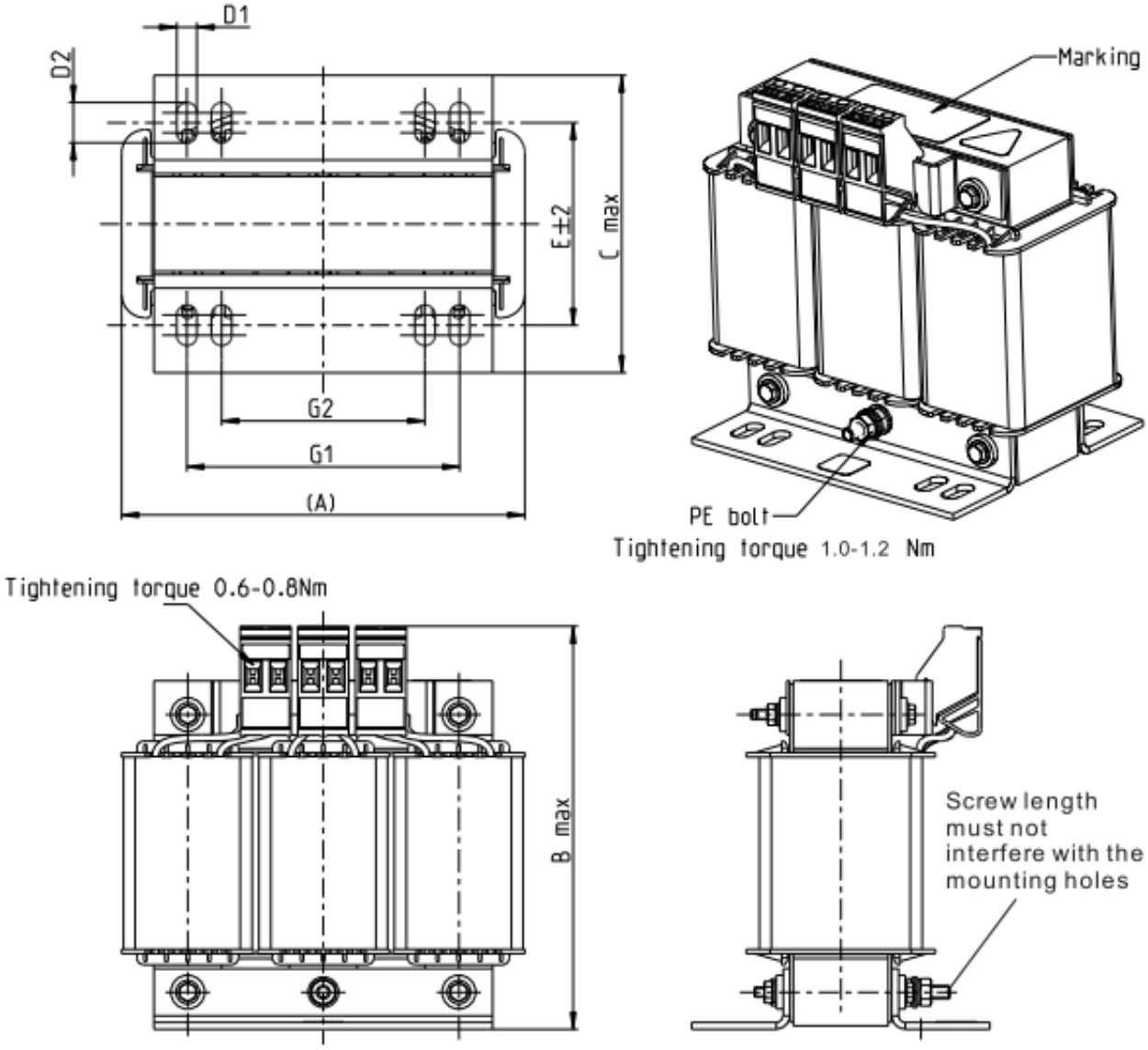

Screw Location	Torque
Terminal	5.32~7.09 kg-cm / [6.12~8.16 lb-in.] / [0.6~0.8 Nm]
PE bolt	8.86~10.63 kg-cm / [10.2~12.24 lb-in.] / [1.0~1.2 Nm]

Input AC reactor Delta part #	A	B	C	D1*D2	E	G1	G2	PE D
DR003A0810	96	100	60	6*9	42	60	40	M4
DR004A0607	120	120	88	6*12	60	80.5	60	M4
DR006A0405	120	120	88	6*12	60	805	60	M4
DR009A0270	150	150	88	6*12	74	107	75	M4
DR010A0231	150	150	112	6*12	88	107	75	M4
DR012A0202	150	150	112	6*12	88	107	75	M4
DR018A0117	150	155	112	6*12	88	107	75	M4
DR024AP881	150	155	112	6*12	88	107	75	M4
DR032AP660	180	175	138	6*12	114	122	85	M6

Unit：mm

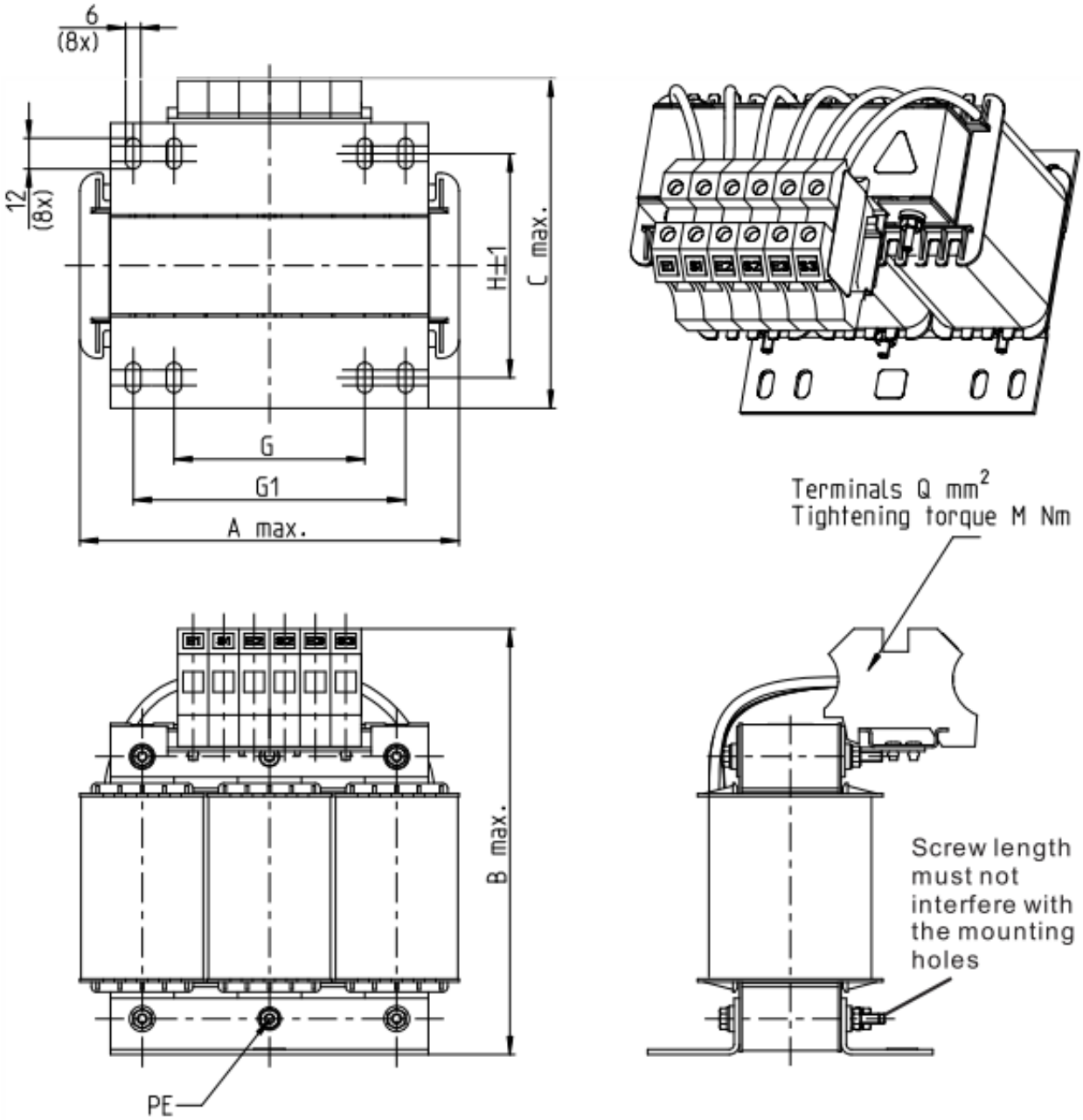

Screw Location	Torque
Terminal	10.63~12.4 kg-cm / [12.24~14.28 lb-in.] / [1.2~1.4 Nm]

Input AC reactor Delta part #	A	B	C	D1*D2	H	G	G1	Q	M	PE D
DR038AP639	180	195	160	6*12	115	85	122	16	1.2~1.4	M4
DR045AP541	235	235	145	7*13	85	/	176	16	1.2~1.4	M6

Unit：mm

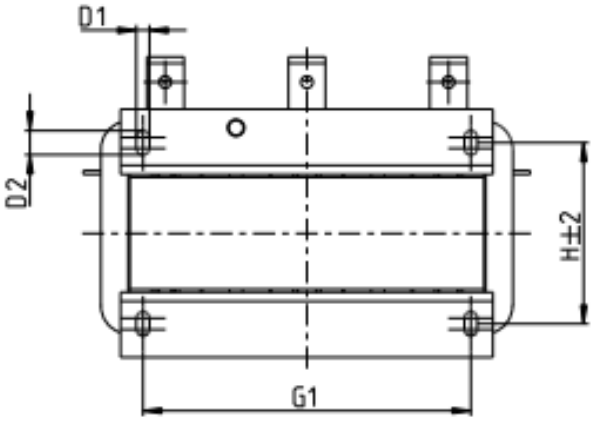

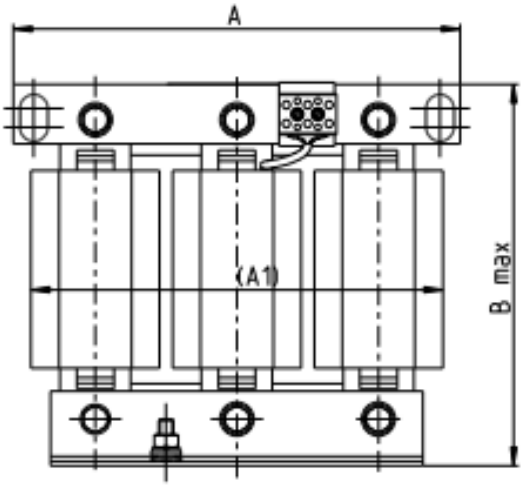

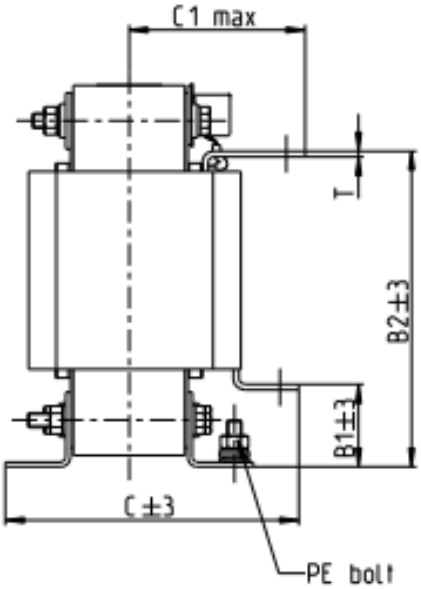

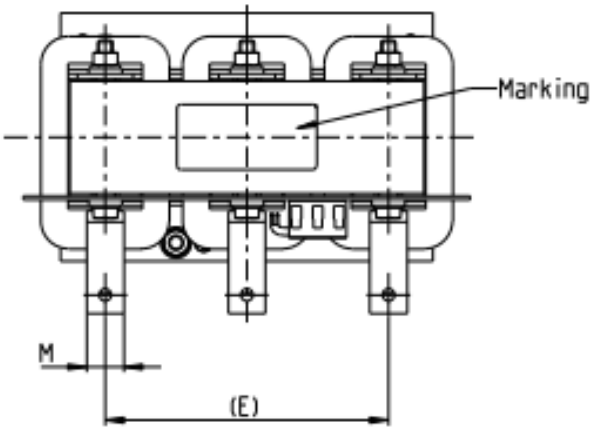

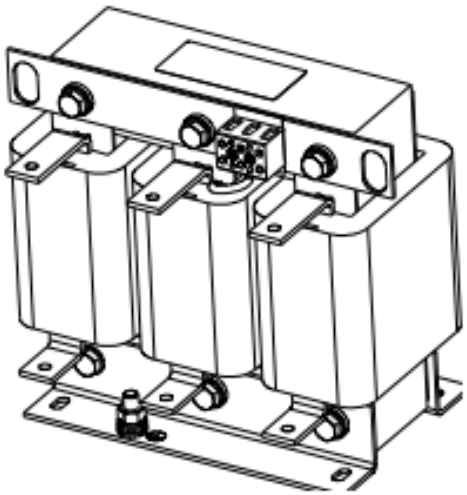

Input AC reactor Delta part #	A	A1	B	B1	B2	C	C1	D1*D2	E	G1	H	M*T	PE
DR060AP405	240	225	210	44	170	163	100	7*13	152	176	97	20*3	M8

Unit：mm

A DC reactor can also, improve power factor, reduce input current, and reduce interference generated from motor drive. A DC reactor stabilizes the DC-bus voltage. Compared to an AC input reactor, the advantages are smaller size, lower price and lower voltage drop (lower power dissipation)

Installation

DC reactor is installed between terminals +1 and +2. The jumper, which is shown as below, needs to be removed before installation.

Note: 115V models are no DC choke.

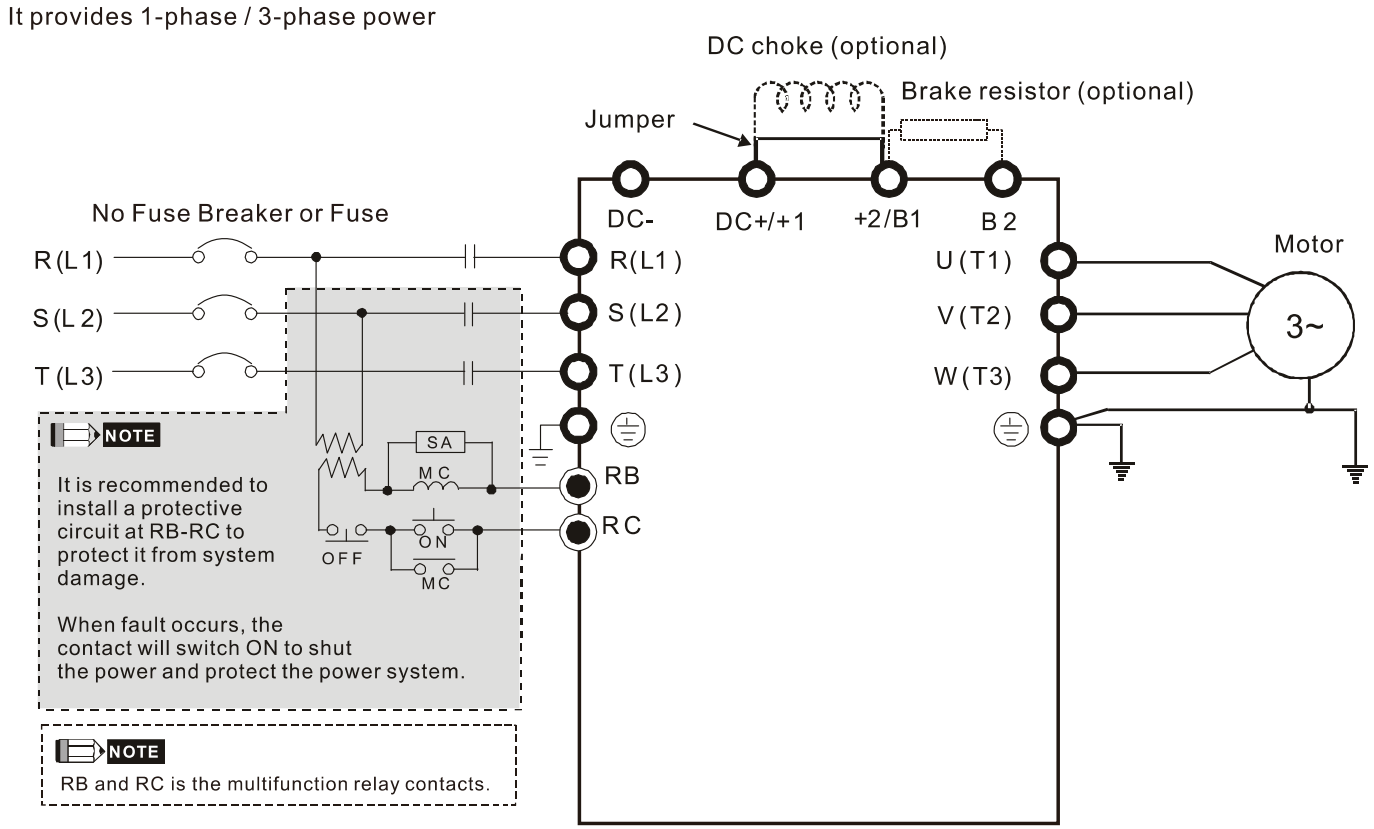

Wiring of DC reactor

DC reactor dimension and specification:

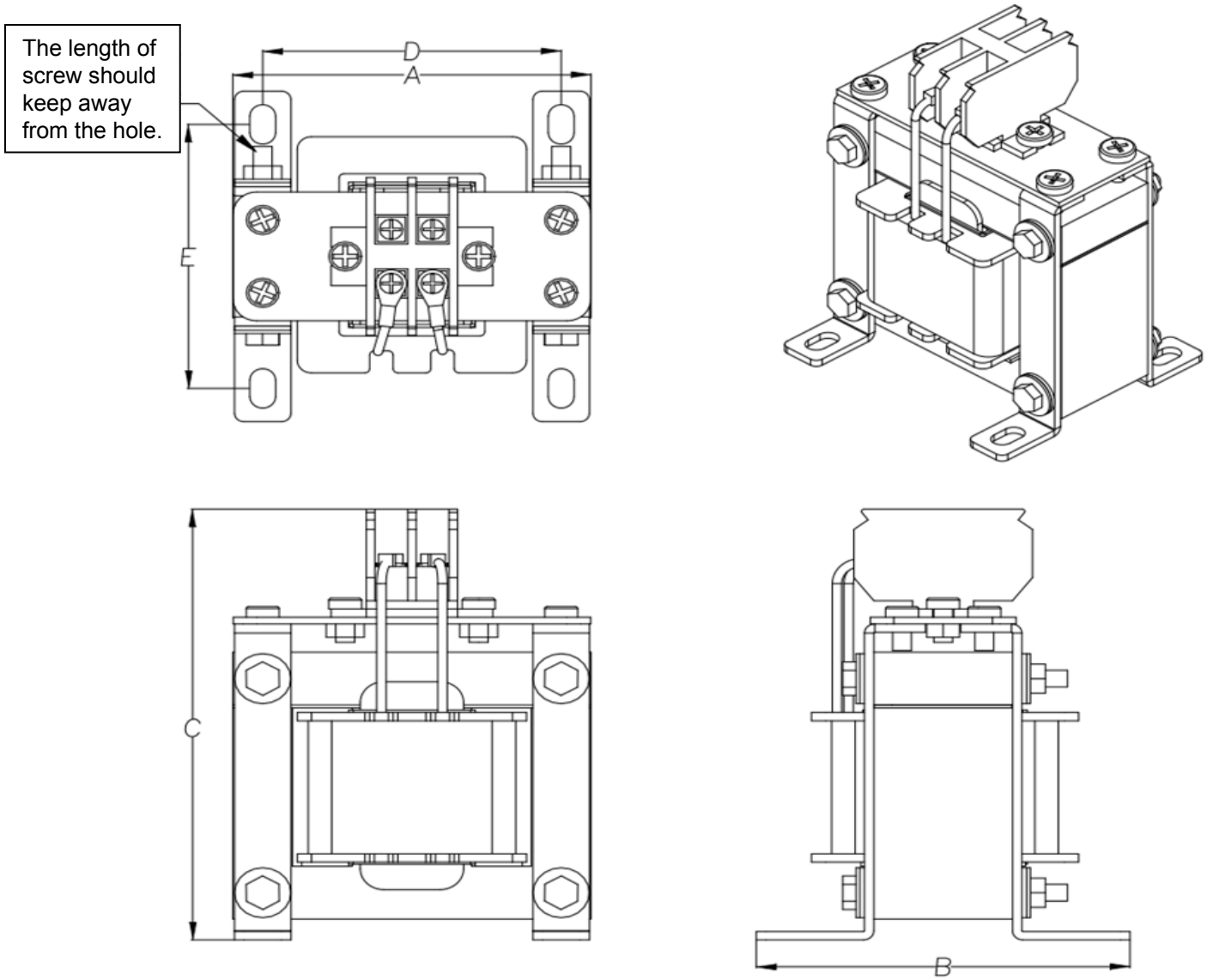

DC reactor Delta Part #	Rated Current (Arms)	Saturation current (Arms)	DC reactor (mH)	A (mm)	B (mm)	C (mm)	D (mm)	E (mm)	Dimension (mm)
DR005D0585	5	8.64	5.857	79	78	107	64	59	9.5*5.5
DR008D0366	8	12.78	3.660	79	82	107	63.5	63.5	9.5*5.5
DR011D0266	11	18	2.662	99	96	128	80	72.5	9*6
DR017D0172	17	28.8	1.722	99	102	128	80	80	9*6
DR025D0117	25	43.2	1.172	117	107	154	95	86	12*8
DR033DP851	33	55.8	0.851	117	113	154	95	92	12*8
DR049DP574	49	84.6	0.574	136	123	170	111	100	12*8
DR065DP432	65	111.6	0.432	136	133	170	111	110	12*8
DR075DP391	75	127.8	0.391	153	150	191	125	127	12*8
DR090DP325	90	154.8	0.325	153	154	191	125	131	12*8

DC reactor Delta Part #	Rated Current (Arms)	Saturation current (Arms)	DC reactor (mH)	A (mm)	B (mm)	C (mm)	D (mm)	E (mm)	Dimension (mm)
DR003D1870	3	5.22	18.709	79	82	107	63.5	64	9.5*5.5
DR004D1403	4	6.84	14.031	79	87	107	63.5	68.5	9.5*5.5
DR006D0935	6	10.26	9.355	99	92	128	80	68.5	9*6
DR009D0623	9	14.58	6.236	99	104	128	80	81.5	9*6
DR010D0534	10.5	17.1	5.345	99	108	128	80	85	9*6

DC reactor Delta Part #	Rated Current (Arms)	Saturation current (Arms)	DC reactor (mH)	A (mm)	B (mm)	C (mm)	D (mm)	E (mm)	Dimension (mm)
DR012D0467	12	19.8	4.677	99	119	128	80	96	9*6
DR018D0311	18	30.6	3.119	117	127	142	95	106	12*8
DR024D0233	24	41.4	2.338	117	134	143	95	113	12*8
DR032D0175	32	54	1.754	136	131	170	111	108	12*8
DR038D0147	38	64.8	1.477	153	143	186	125	120	12*8
DR045D0124	45	77.4	1.247	153	149	186	125	126	12*8

Length of Motor Cable

1. Leakage current to affect the motor and counter measurement

Due to larger parasitic capacitances in longer motor cables, the leakage current increases. This can activate the over-current protection and incorrect display of current. In worst case the drive can be damaged.

If more than one motor is connected to the AC motor drive, the total motor cable length is the sum of the cable length from AC motor drive to each motor.

For 460V series AC motor drives, when an overload relay is installed between the drive and the motor to protect motor from overheating, the connecting cable must be shorter than 50m.

However, the overload relay could still malfunction. To prevent this, install an AC output reactor (optional) to the drive and/or lower the carrier frequency setting (Pr. 00-17).

2. Surge voltage to affect the motor and counter measurement

When a motor is driven by a PWM signal from an AC motor drive, the motor terminals can easily experience surge voltages (dv/dt) due to the IGBT switching and the cable capacitance. When the motor cable is very long (especially for the 460V series), surge voltages (dv/dt) may reduce motor insulation quality. To prevent this situation, please follow the rules below:

a. Use a motor with enhanced insulation
b. Connect an output reactor (optional) to the output terminals of the AC motor drive
c. Reduce the motor cable length to the values below

The suggested motor shielded cable length in the following table complies with IEC 60034-17, which is suitable for motors with a rated voltage ≤500 Vac and with an insulation level of ≥1.35 kV_{p-p}

110V 1-phase Model	Rated current (ND) (Arms)	Without AC reactor		With AC reactor	
		Shielded Cable (meter)	Non-shielded cable (meter)	Shielded Cable (meter)	Non-shielded cable (meter)
VFD1A6MS11ANSAA VFD1A6MS11ENSAA	1.8	50	75	75	115
VFD2A5MS11ANSAA VFD2A5MS11ENSAA	2.7	50	75	75	115
VFD4A8MS11ANSAA VFD4A8MS11ENSAA	5.5	50	75	75	115

230V 1-phase Model	Rated current (ND) (Arms)	Without AC reactor		With AC reactor	
		Shielded Cable (meter)	Non-shielded cable (meter)	Shielded Cable (meter)	Non-shielded cable (meter)
VFD1A6MS21ANSAA VFD1A6MS21ENSAA VFD1A6MS21AFSAA	1.8	50	75	75	115
VFD2A8MS21ANSAA VFD2A8MS21ENSAA VFD2A8MS21AFSAA	3.2	50	75	75	115
VFD4A8MS21ANSAA VFD4A8MS21ENSAA VFD4A8MS21AFSAA	1.8	50	75	75	115
VFD7A5MS21ANSAA VFD7A5MS21ENSAA VFD7A5MS21AFSAA	3.2	50	75	75	115
VFD11AMS21ANSAA VFD11AMS21ENSAA VFD11AMS21AFSAA	5	50	75	75	115

230V 3-phase Model	Rated current (ND) (Arms)	Without AC reactor		With AC reactor	
		Shielded Cable (meter)	Non-shielded cable (meter)	Shielded Cable (meter)	Non-shielded cable (meter)
VFD1A6MS23ANSAA VFD1A6MS23ENSAA	1.8	50	75	75	115
VFD2A8MS23ANSAA VFD2A8MS23ENSAA	3.2	50	75	75	115
VFD4A8MS23ANSAA VFD4A8MS23ENSAA	5	50	75	75	115
VFD7A5MS23ANSAA VFD7A5MS23ENSAA	8	50	75	75	115
VFD11AMS23ANSAA VFD11AMS23ENSAA	12.5	50	75	75	115
VFD17AMS23ANSAA VFD17AMS23ENSAA	19.5	50	75	75	115
VFD25AMS23ANSAA VFD25AMS23ENSAA	27	50	75	75	115
VFD33AMS23ANSAA VFD33AMS23ENSAA	36	100	150	150	225
VFD49AMS23ANSAA VFD49AMS23ENSAA	51	100	150	150	225
VFD65AMS23ANSAA VFD65AMS23ENSAA	69	100	150	150	225

460V 3-phase Model	Rated current (ND) (Arms)	Without AC reactor		With AC reactor	
		Shielded Cable (meter)	Non-shielded cable (meter)	Shielded Cable (meter)	Non-shielded cable (meter)
VFD1A5MS43ANSAA VFD1A5MS43ENSAA VFD1A5MS43AFSAA	1.8	35	50	50	90
VFD2A7MS43ANSAA VFD2A7MS43ENSAA VFD2A7MS43AFSAA	3	35	50	50	90
VFD4A2MS43ANSAA VFD4A2MS43ENSAA VFD4A2MS43AFSAA	4.6	35	50	50	90
VFD5A5MS43ANSAA VFD5A5MS43ENSAA VFD5A5MS43AFSAA	6.5	50	75	75	115
VFD9A0MS43ANSAA VFD9A0MS43ENSAA VFD9A0MS43AFSAA	10.5	50	75	75	115
VFD13AMS43ANSAA VFD13AMS43ENSAA VFD13AMS43AFSAA	15.7	50	75	75	115
VFD17AMS43ANSAA VFD17AMS43ENSAA VFD17AMS43AFSAA	20.5	100	150	150	225
VFD25AMS43ANSAA VFD25AMS43ENSAA VFD25AMS43AFSAA	28	100	150	150	225
VFD32AMS43ANSAA VFD32AMS43ENSAA VFD32AMS43AFSAA	36	100	150	150	225
VFD38AMS43ANSAA VFD38AMS43ENSAA VFD38AMS43AFSAA	41.5	100	150	150	225
VFD45AMS43ANSAA VFD45AMS43ENSAA VFD45AMS43AFSAA	49	100	150	150	225

7-5 Zero Phase Reactors

Interferences can also be suppressed by installing a zero phase reactor at the mains input or the motor output of the drive, depending on where the interference is. Delta provides two types of zero phase reactors to solve interference problems.

A. Casing with mechanical fixed part

This solution is for mains input/motor output side and can endure higher loading and be used at higher frequencies. Higher impedance can be achieved by increasing the number of turns.

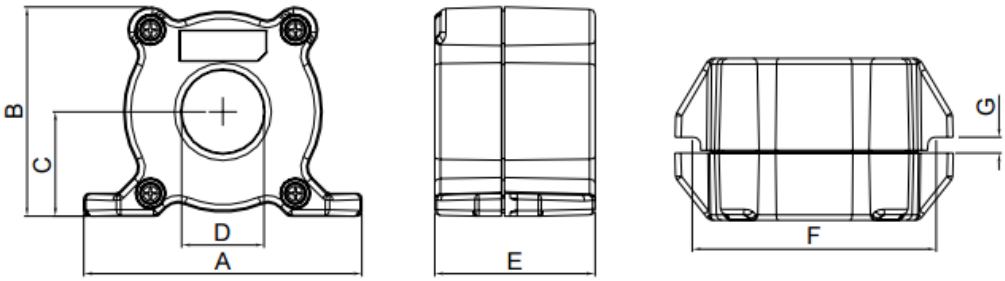

Unit: mm

Model	A	B	C	D	E	F	G(Ø)	To use w/
RF008X00A	99	73	36.5	29	56.5	86	5.5	Motor cable

B. Casing without mechanical fixed part.

This solution has higher performance: high initial magnetic permeability, high saturation induction density, low iron loss and perfect temperature characteristic. If it does not need to be fixed mechanically, this solution is suggested

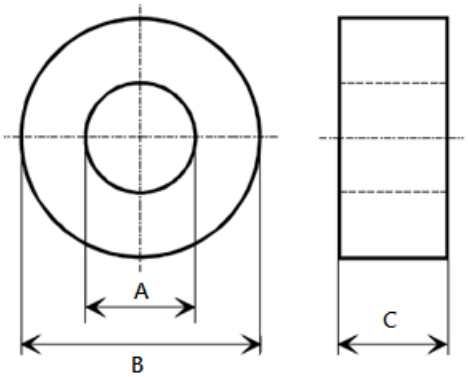

Unit: mm

Model	A	B	C
T60006L2040W453	22.5	43.1	18.5
T60006L2050W565	36.3	53.5	23.4

Installation

During installation, please pass the cable through at least one zero-phase reactor.
Use a suitable cable type (insulation class and wire section) so that the cable passes easily through the zero-phase reactor. Do not pass the grounding cable through zero-phase reactor; only pass the motor wire through.

With longer motor cables the zero-phase reactor can effectively reduce interference at the motor output. Install the zero-phase reactor as close to the output of the drive as possible. Figure A is the installation diagram of a single turn zero-phase reactor. If the diameter allows several turns, the installation of a multi-turn zero-phase reactor is as shown in Figure B. The more turns, the better the noise suppression effect.

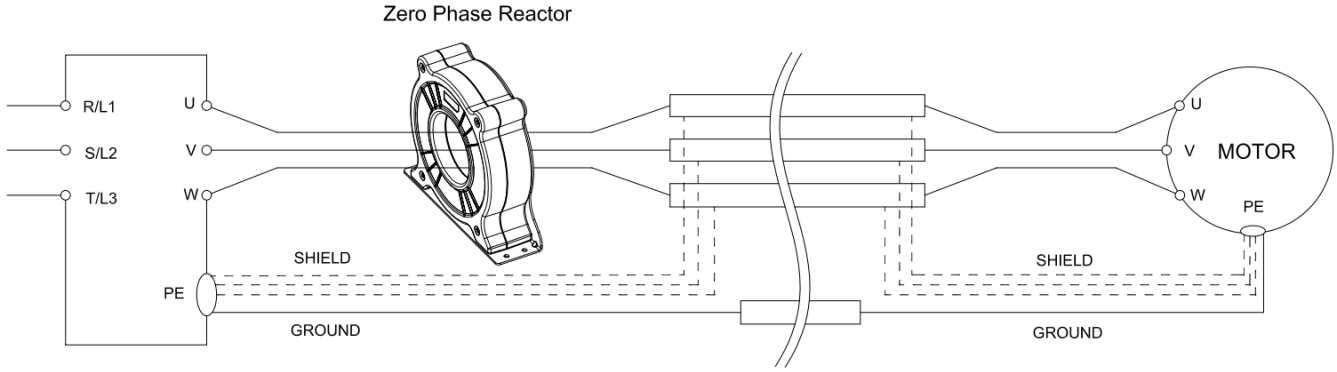

Figure A: Single turn wiring diagram of a shieling wire with a zero-phase reactor

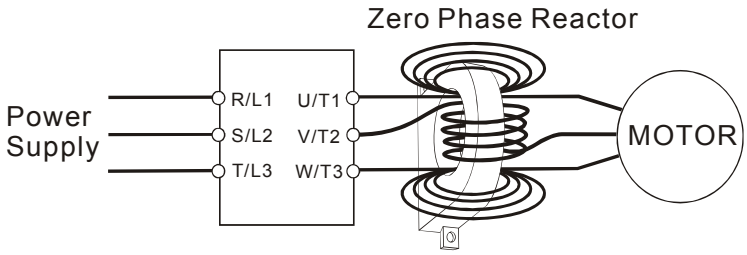

Figure B: Multi-Turn Zero Phase Reactor

Installation notices

Install the zero-phase reactor at the output terminal of the frequency converter (U.V.W.).
After the zero-phase reactor is installed, the electromagnetic radiation and load stress emitted by the wiring of the frequency converter is reduced. The number of zero-phase reactor required for the drive depends on the length of wiring and the voltage of the drive.

The normal operating temperature of the zero-phase reactor should be lower than 85°C (176°F). However, when the zero-phase reactor is saturated, its temperature may exceed 85°C (176°F). Please increase the number of zero-phase reactors to avoid saturation. The following are reasons that might cause saturation of the zero-phase reactors. For example: The wiring of the drive is too long; the drive has several sets of load; the wiring is in parallel; the drive uses high capacitance wiring. If the temperature of the zero-phase reactor exceeds 85°C (176°F) during the operation of the drive, the number of the zero-phase reactor should be increased.

Recommended max. wiring gauge when installing zero phase reactor

Model # of Zero Phase Reactor	Max, Wire Gauge or LUG width	Max. Wire Gauge AWG (1Cx3)		Max. Wire Gauge AWG (1Cx4)	
		75 °C	90 °C	75 °C	90 °C
RF008X00A	13 mm	3 AWG	1 AWG	3 AWG	1 AWG
T600006L2040W453	11 mm	9 AWG	4 AWG	6 AWG	6 AWG
T600006L2050W565	16 mm	1 AWG	2/0 AWG	1 AWG	1/0 AWG

Zero Phase Reactor for Signal Cable

To solve interference problems between signal cables and electric devices, install a zero phase reactor on signal cable. Install it on the signal cable which is the source of the interference to suppress the noise for a better signal. The model names and dimensions are in the table below.

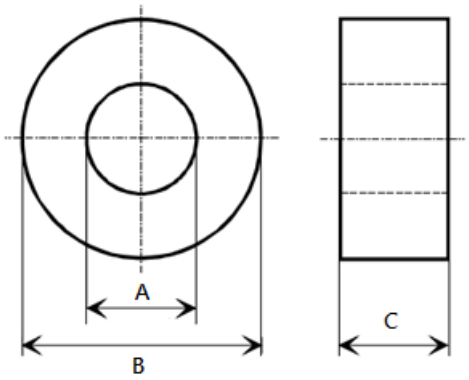

Model	A	B	C
T60004L2016W620	10.7	17.8	8.0
T60004L2025W622	17.5	27.3	12.3

Unit: mm

7-6 EMC Filter

Frame	Model #	Input Current (A)	Filter model #	Recommended model of zero-phase reactor		Conducted emission max. motor cable length				Radiated emission max. motor cable length		
						C1 30m			C2 100m	C2 100m		
						Position to place zero phase reactor						
				DELTA	VAC	*1	*2	*3	N/A	*1	*2	*3
A	VFD1A6MS11ANSAA	6.8	EMF11AM21A	RF008X00A	T60006L2040W453				NA			
A	VFD1A6MS21ANSAA	3.8	EMF11AM21A	RF008X00A	T60006L2040W453		✓	✓	NA		✓	✓
A	VFD2A8MS21ANSAA	6.7	EMF11AM21A	RF008X00A	T60006L2040W453		✓	✓	NA		✓	✓
A	VFD1A6MS23ANSAA	2.2	EMF10AM23A	RF008X00A	T60006L2040W453		✓	✓	NA		✓	✓
A	VFD2A8MS23ANSAA	3.8	EMF10AM23A	RF008X00A	T60006L2040W453		✓	✓	NA		✓	✓
A	VFD4A8MS23ANSAA	6	EMF10AM23A	RF008X00A	T60006L2040W453		✓	✓	NA		✓	✓
A	VFD1A5MS43ANSAA	2.5	EMF6A0M43A	RF008X00A	T60006L2040W453			✓	NA			✓
A	VFD2A7MS43ANSAA	4.2	EMF6A0M43A	RF008X00A	T60006L2040W453			✓	NA			✓
A	VFD2A5MS11ANSAA	10.1	EMF11AM21A	RF008X00A	T60006L2040W453				NA			
B	VFD4A8MS21ANSAA	10.5	EMF11AM21A	RF008X00A	T60006L2040W453		✓	✓	NA		✓	✓
B	VFD7A5MS23ANSAA	9.6	EMF10AM23A	RF008X00A	T60006L2040W453		✓	✓	NA		✓	✓
B	VFD4A2MS43ANSAA	6.4	EMF6A0M43A	RF008X00A	T60006L2040W453			✓	NA			✓
C	VFD4A8MS11ANSAA	20.6	EMF27AM21B	RF008X00A	T60006L2040W453				NA			
C	VFD7A5MS21ANSAA	17.9	EMF27AM21B	RF008X00A	T60006L2040W453			✓	NA			✓
C	VFD11AMS21ANSAA	26.3	EMF27AM21B	RF008X00A	T60006L2040W453			✓	NA			✓
C	VFD11AMS23ANSAA	15	EMF24AM23B	RF008X00A	T60006L2040W453		✓	✓	NA		✓	✓
C	VFD17AMS23ANSAA	23.4	EMF24AM23B	RF008X00A	T60006L2040W453		✓	✓	NA		✓	✓
C	VFD5A5MS43ANSAA	7.2	EMF12AM43B	RF008X00A	T60006L2040W453				NA			
C	VFD9A0MS43ANSAA	11.6	EMF12AM43B	RF008X00A	T60006L2040W453		✓	✓	NA		✓	✓
D	VFD25AMS23ANSAA	32.4	EMF33AM23B	RF008X00A	T60006L2050W565	✓	✓		NA	✓	✓	
D	VFD13AMS43ANSAA	17.3	EMF23AM43B	RF008X00A	T60006L2050W565	✓	✓	✓	NA	✓	✓	✓
D	VFD17AMS43ANSAA	22.6	EMF23AM43B	RF008X00A	T60006L2050W565	✓	✓	✓	NA	✓	✓	✓
E	VFD33AMS23ANSAA	43.2	B84143D0075R127	RF008X00A	T60006L2050W565		✓	✓	NA		✓	✓
E	VFD49AMS23ANSAA	61.2	B84143D0075R127	RF008X00A	T60006L2050W565		✓	✓	NA		✓	✓
E	VFD25AMS43ANSAA	30.8	B84143D0050R127	RF008X00A	T60006L2050W565				NA			
E	VFD32AMS43ANSAA	39.6	B84143D0050R127	RF008X00A	T60006L2050W565		✓	✓	NA		✓	✓
F	VFD65AMS23ANSAA	82.8	B84143D0090R127	RF008X00A	T60006L2050W565		✓	✓	NA		✓	✓
F	VFD38AMS43ANSAA	45.7	B84143D0075R127	RF008X00A	T60006L2050W565		✓	✓	NA		✓	✓
F	VFD45AMS43ANSAA	53.9	B84143D0075R127	RF008X00A	T60006L2050W565		✓	✓	NA		✓	✓

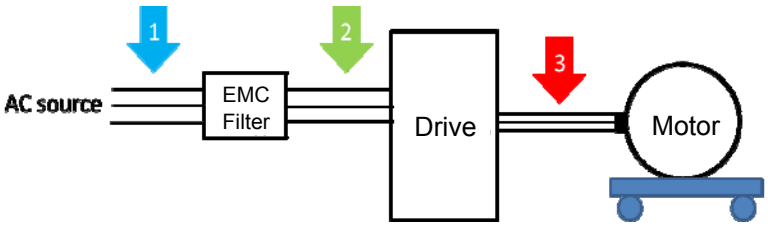

Filter Dimension

EMF11AM21A

EMF10AM23A

EMF6A0M43A

Screw	Torque
M5 * 2	16~20 kg-cm / [13.9~17.3 lb-in.] / [1.56~1.96 Nm]
M4 * 2	14~16 kg-cm / [12.2~13.8 lb-in.] / [1.38~1.56 Nm]

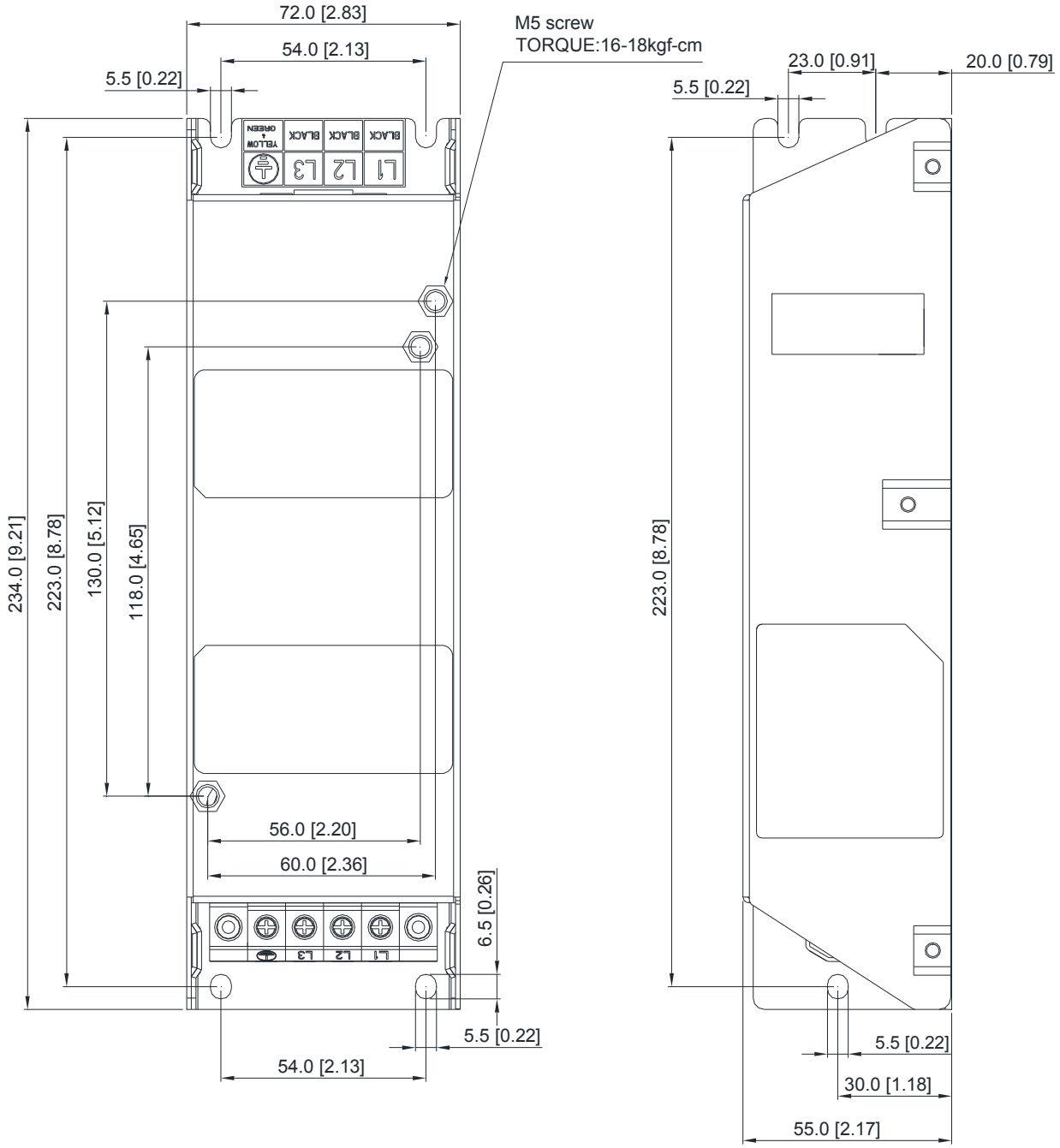

EMF27AM21B; EMF24AM23B

EMF33AM23B; EMF12AM43B

EMF23AM43B

Screw	Torque
M5 * 4	16~20 kg-cm / [13.9~17.3 lb-in.] / [1.56~1.96 Nm]

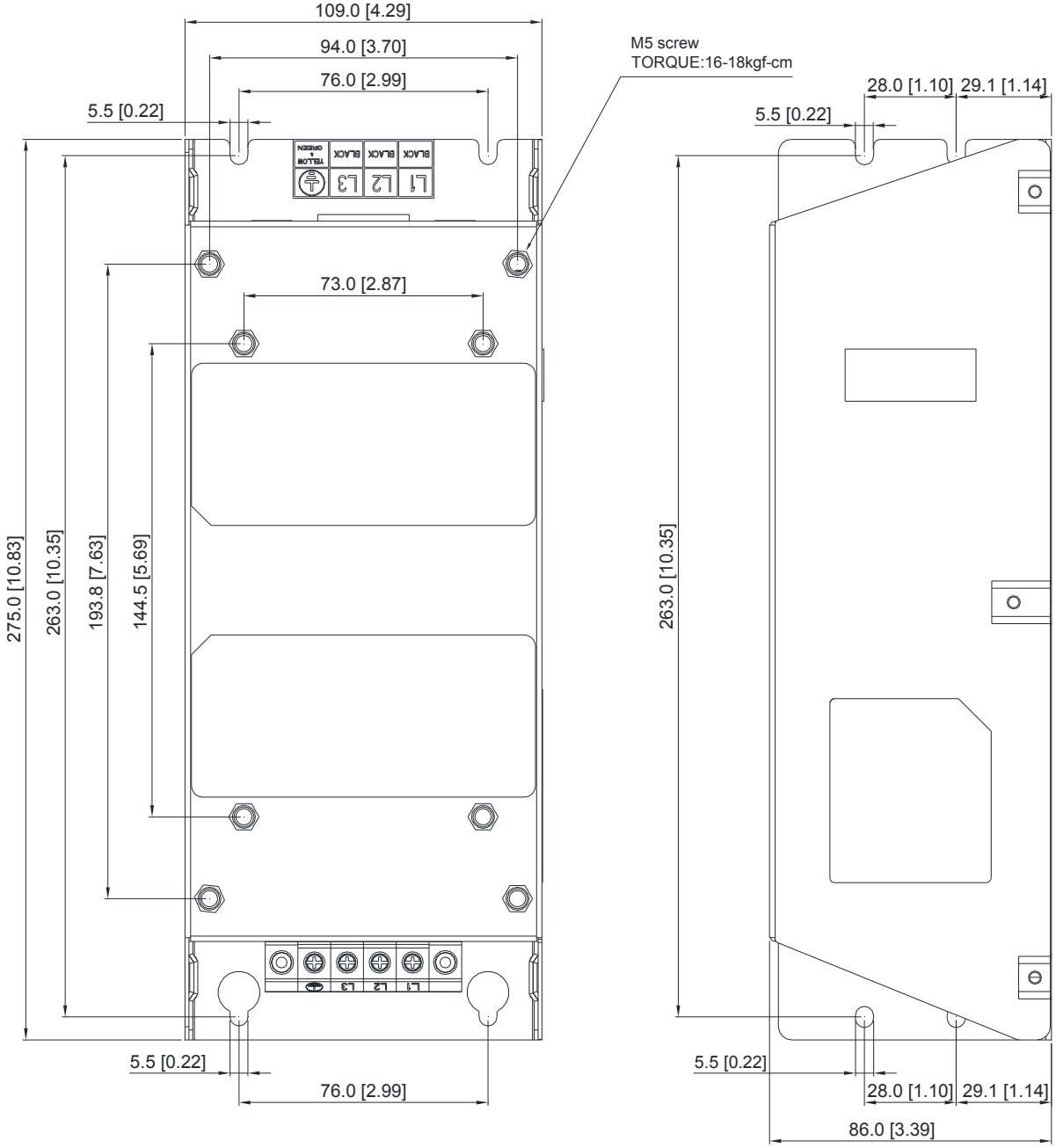

TDK B84143D0050R127 (50A)

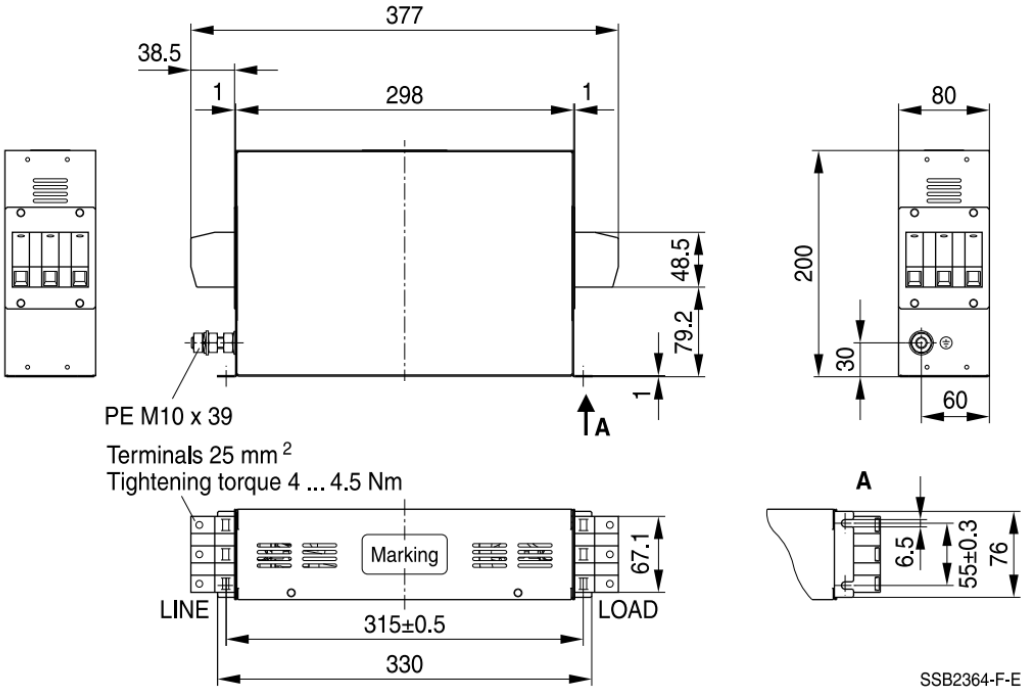

TDK B84143D0075R127 (75A), TDK B84143D0090R127 (90A)

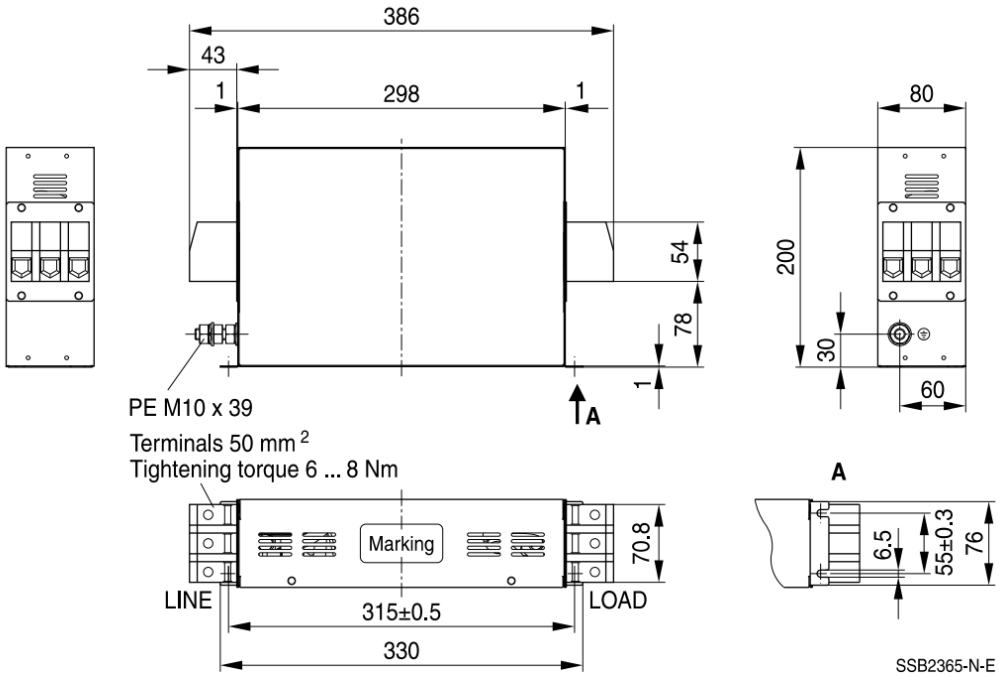

7-7 EMC Shield Plate

EMC Shield Plate (for use with use shielded cable)

Frame	EMC Shield Plate model	Reference figure
A	MKM-EPA	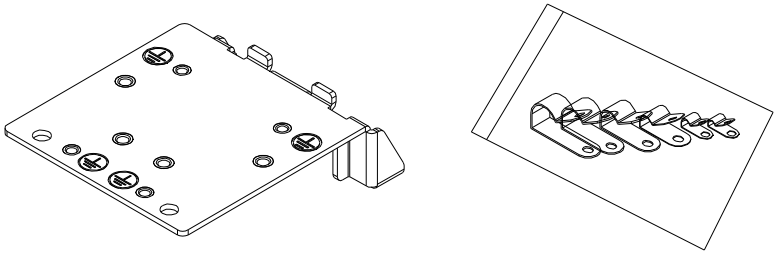
B	MKM-EPB	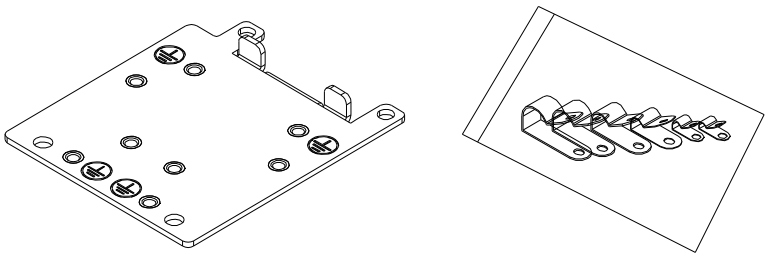
C	MKM-EPC	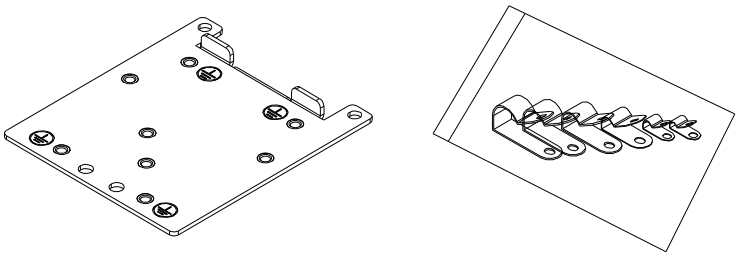
D	MKM-EPD	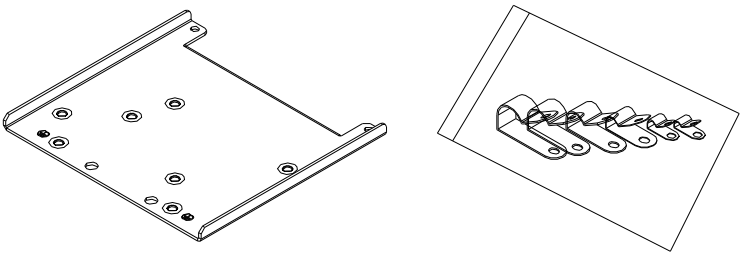
E	MKM-EPE	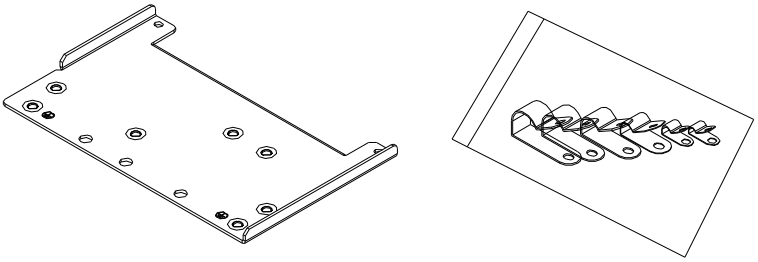
F	MKM-EPF	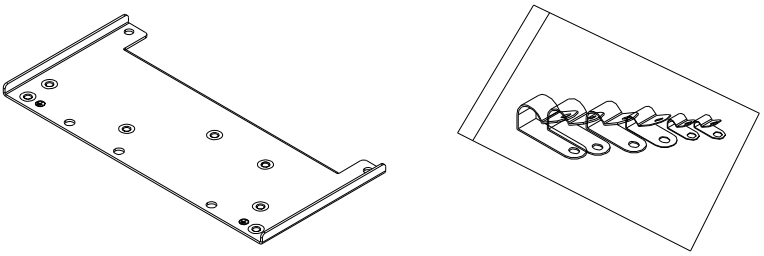

Installation

(Frame A model as an example)

1. As on the right, fix the iron plate on the AC motor drive.

   Torque value:

Frame	Screw	Torque
A	M3.5	6~8 kg-cm / [5.2~6.9 lb-in.] / [0.59~0.78 Nm]
B	M4	6~8 kg-cm / [5.2~6.9 lb-in.] / [0.59~0.78 Nm]
C	M4	6~8 kg-cm / [5.2~6.9 lb-in.] / [0.59~0.78 Nm]
D	M3	4~6 kg-cm / [3.5~5.2 lb-in.] / [0.39~0.59 Nm]
E	M3	4~6 kg-cm / [3.5~5.2 lb-in.] / [0.39~0.59 Nm]
F	M4	6~8 kg-cm / [5.2~6.9 lb-in.] / [0.59~0.78 Nm]

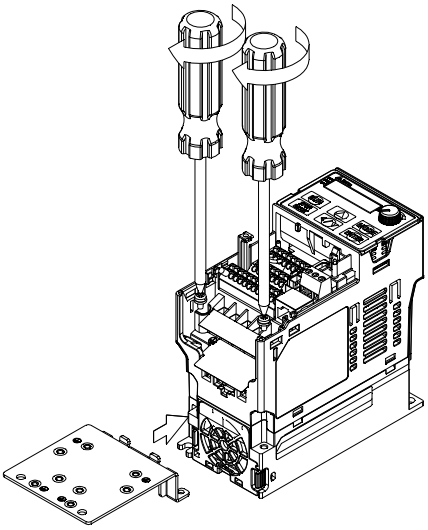

2. After selecting suitable R-clip according to the wire gauge used, fix the R-clip on shield plate.

Screw	Torque
M4	6~8 kg-cm / [5.2~6.9 lb-in.] / [0.59~0.78 Nm]

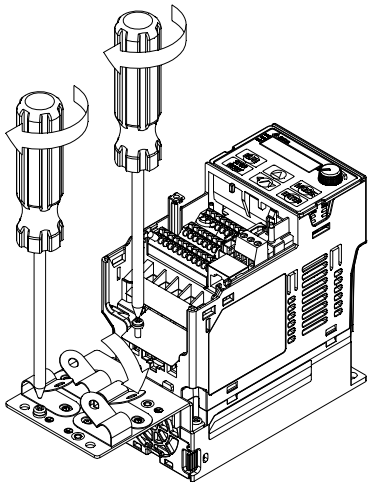

Dimensions of EMC Shield Plate

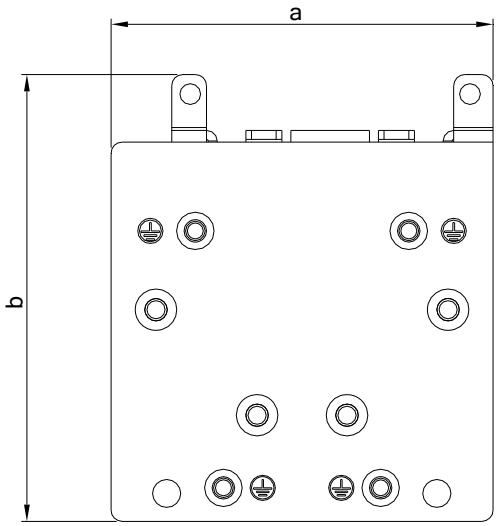

Model	Dimensions of Shield Plate mm [inch.]	
	a	b
MKM-EPA	69.3 [2.73]	80.0 [3.15]
MKM-EPB	67.7 [2.67]	79.7 [3.14]
MKM-EPC	78.0 [3.07]	91.0 [3.58]
MKM-EPD	103.4 [4.07]	97.0 [3.82]
MKM-EPE	124.3 [4.89]	77.4 [3.05]
MKM-EPF	168.0 [6.61]	80.0 [3.15]

Recommended wire mounting method

Frame	Model of EMC Shield Plate	Reference figure
A	MKM-EPA	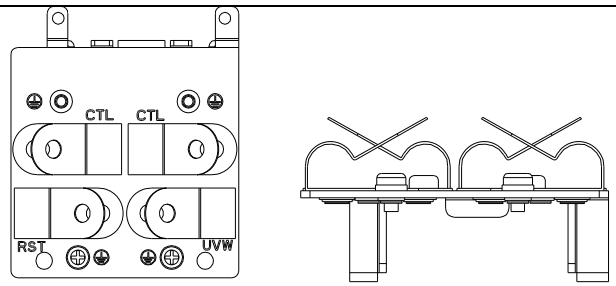
B	MKM-EPB	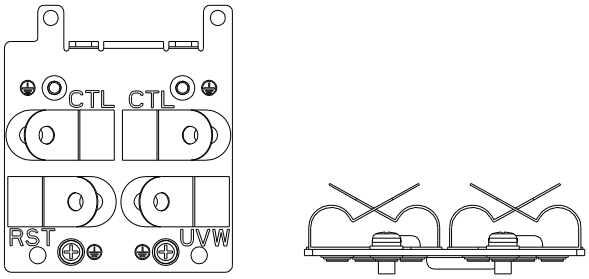
C	MKM-EPC	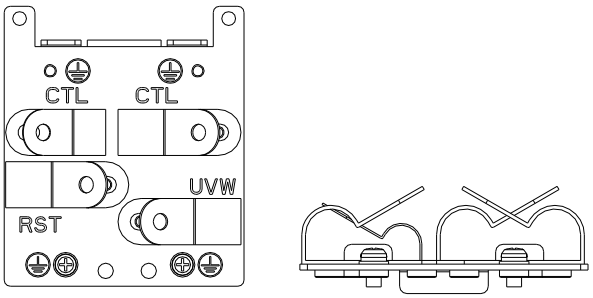
D	MKM-EPD	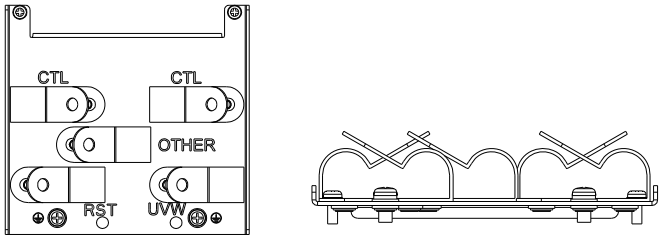
E	MKM-EPE	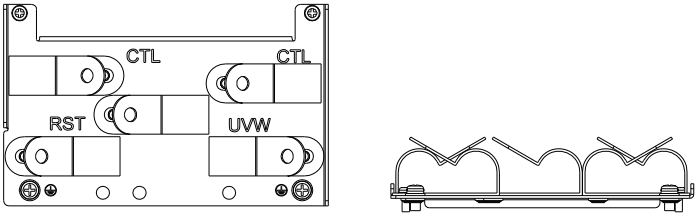
F	MKM-EPF	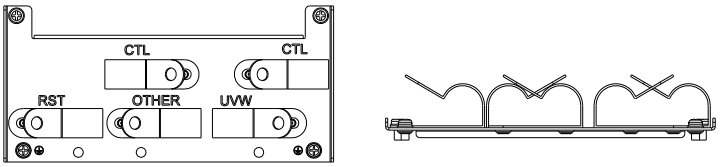

7-8 Capacitive Filter

Installation diagram**:**

The capacitive filter (CXY101-43A) is a simple filter which can support basic filtering and noise interference reduction.

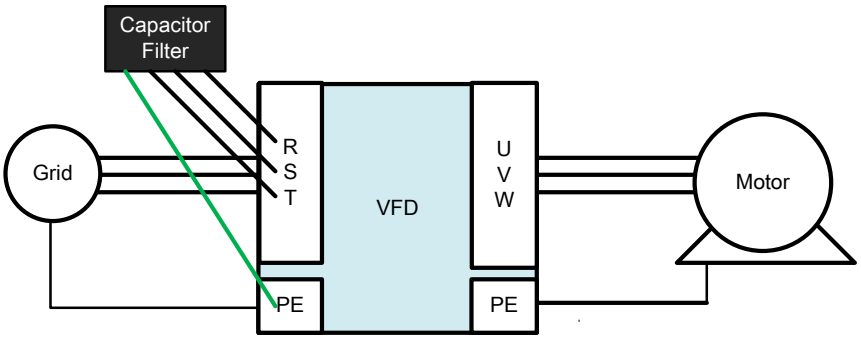

Capacitive filter and drive wiring figure：

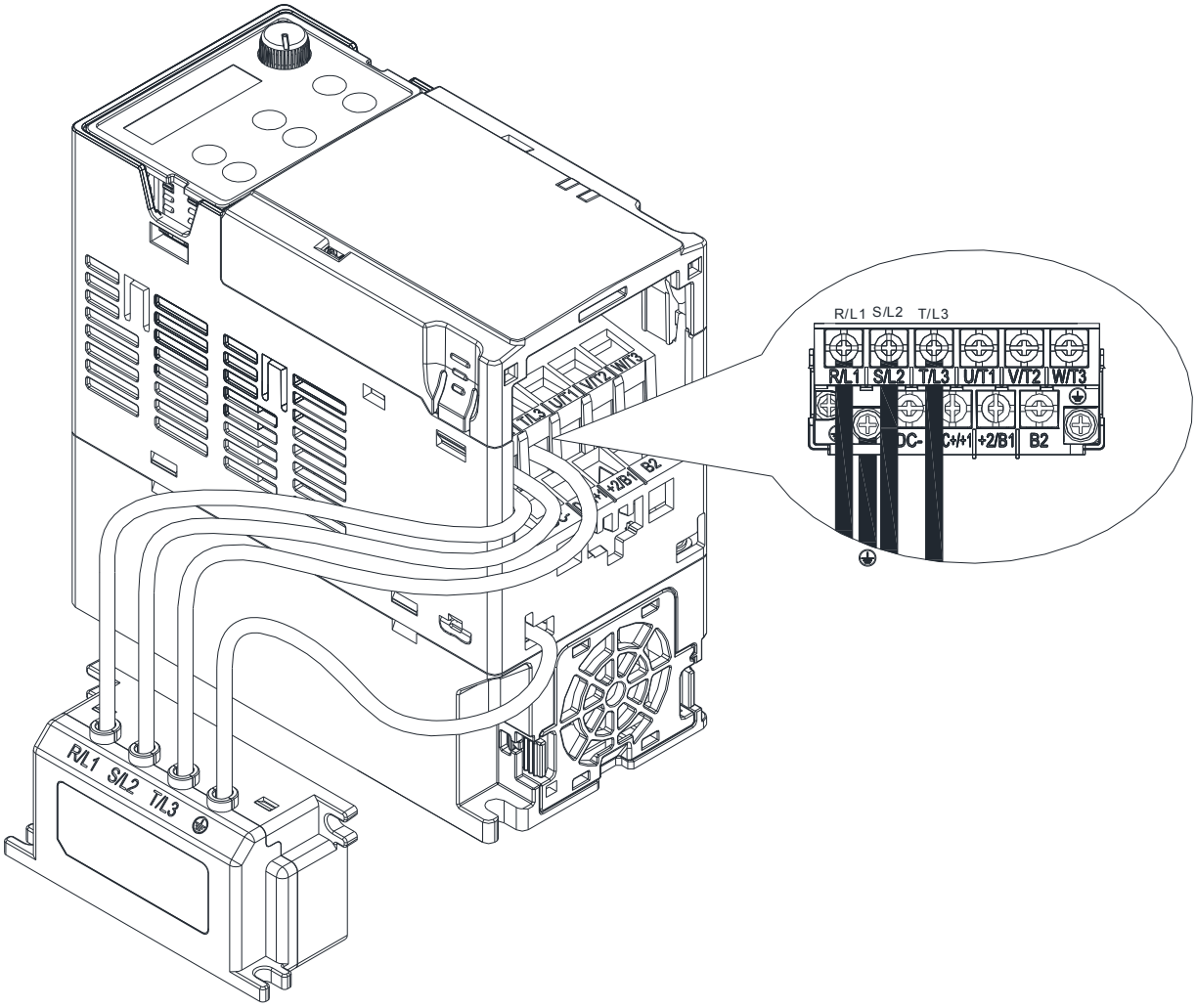

Specification:

Model	Capacitance	Temperature range
CXY101-43A	Cx：1 μF ± 20 % Cy：0.1 μF ± 20 %	-40 ~ +85°C

Dimension：

CXY101-43A

Unit：mm [inch]

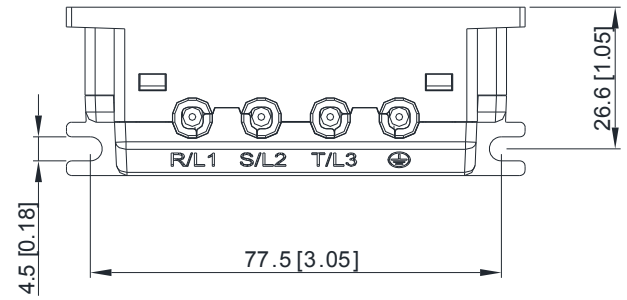

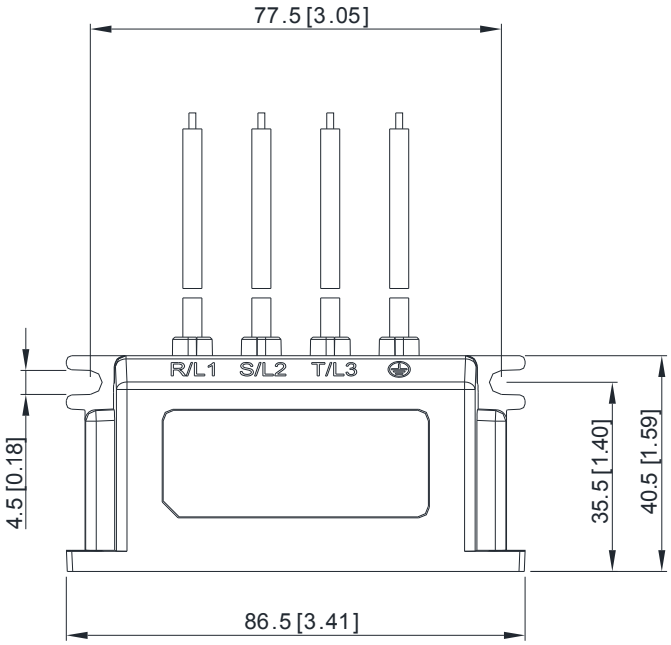

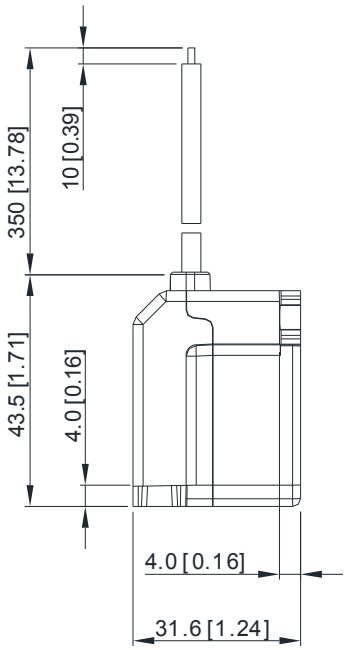

7-9 Conduit Box

Conduit box are in compliance with protection level NEMA 1 / UL Type 1

Frame A (A1~A2)

Model of conduit box: MKM-CBA0

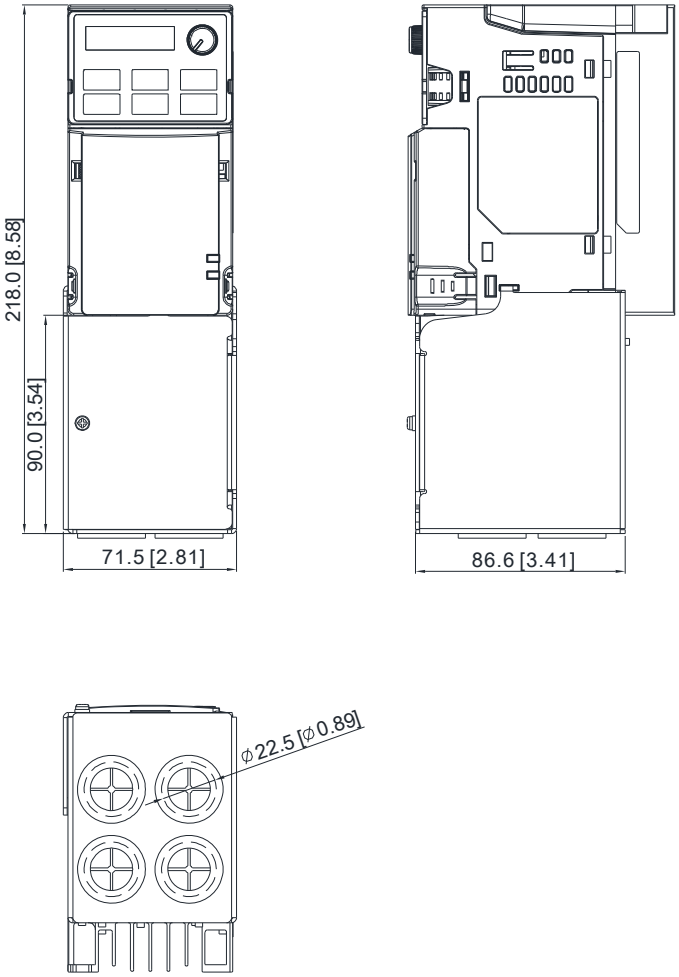

Unit: mm [inch]

Frame A (A3~A5)

Model of conduit box: MKM-CBA

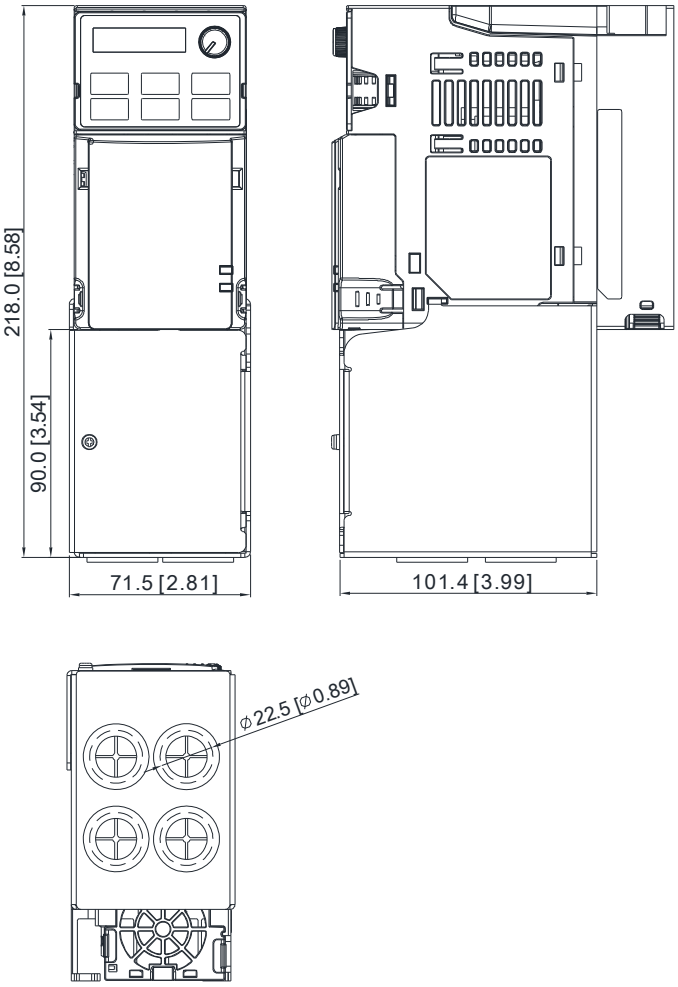

Unit: mm [inch]

Frame B

Model of conduit box: MKM-CBB

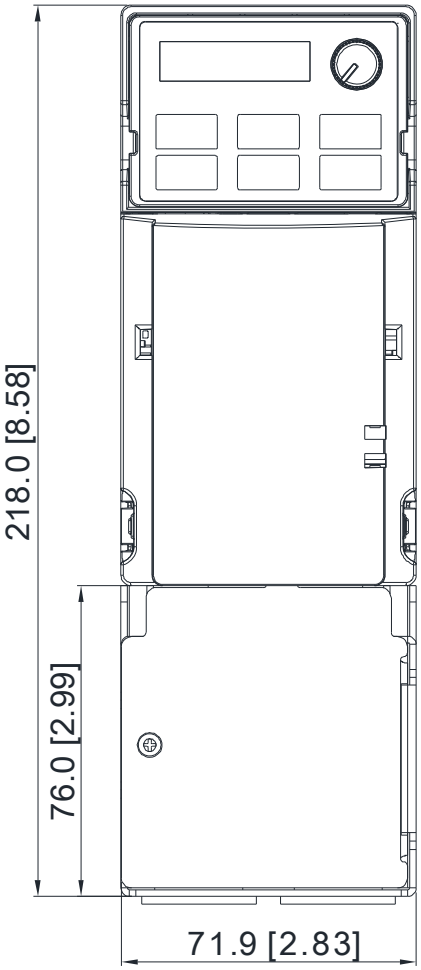

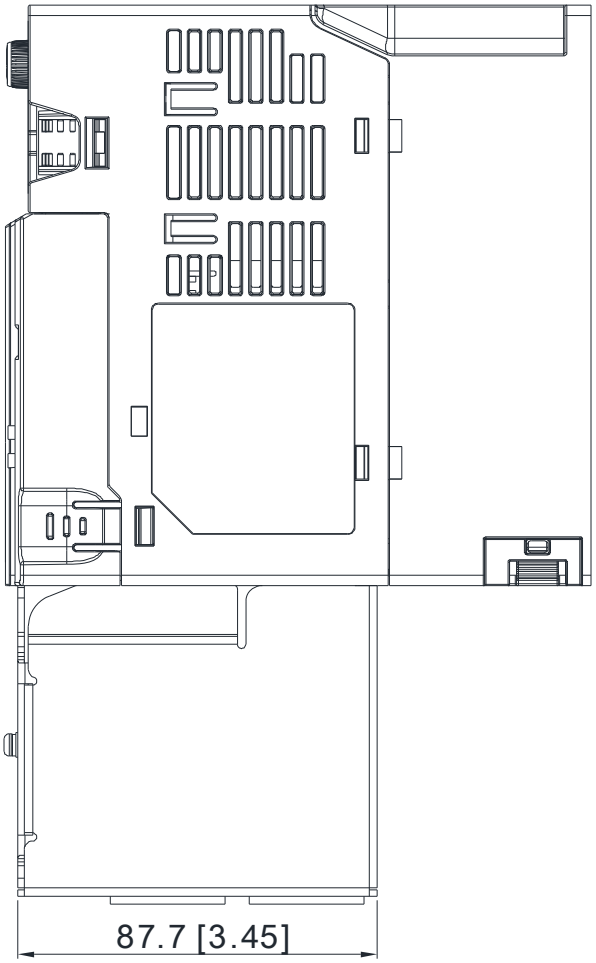

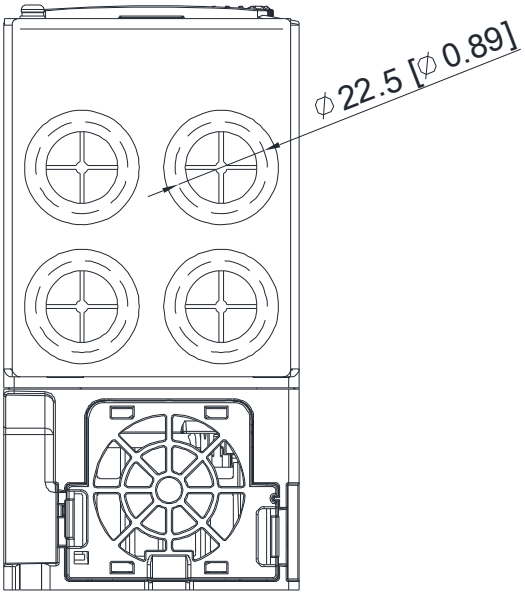

Unit: mm [inch.]

Frame C

Model of conduit box: MKM-CBC

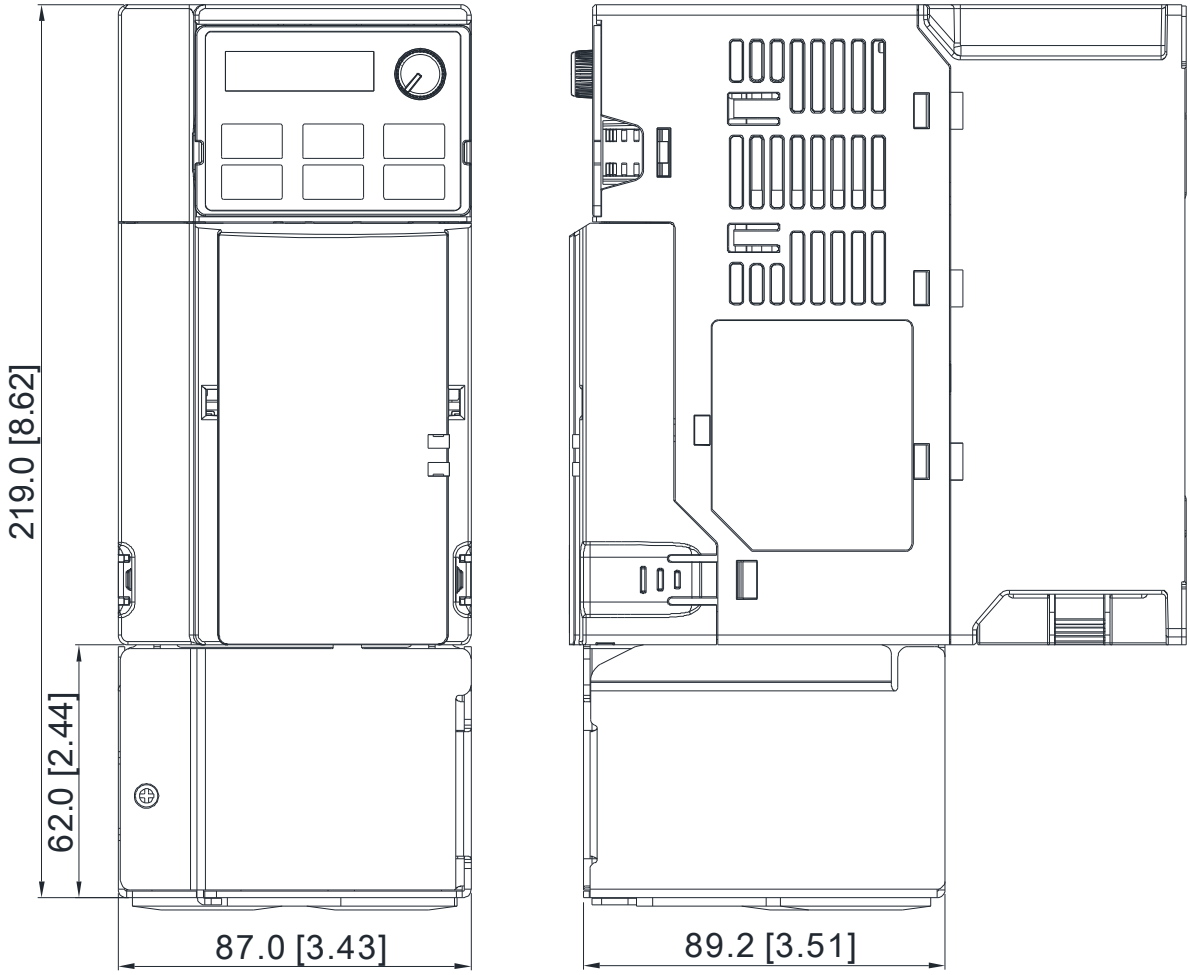

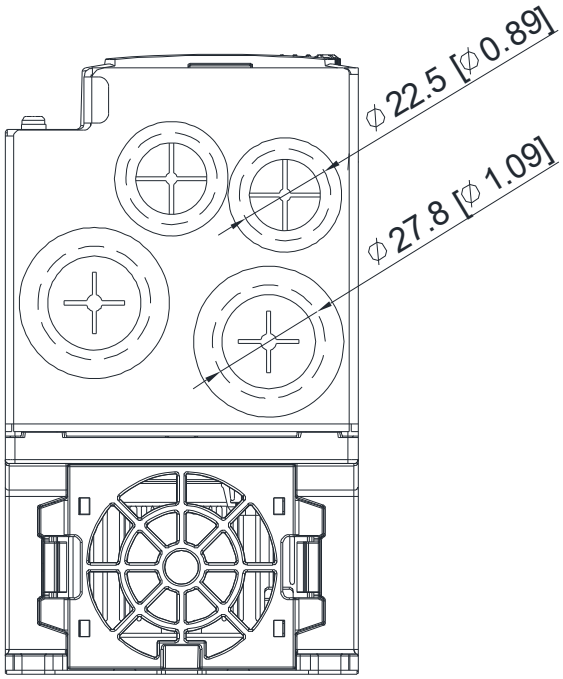

Unit: mm [inch.]

Frame D

Model of conduit box: MKM-CBD

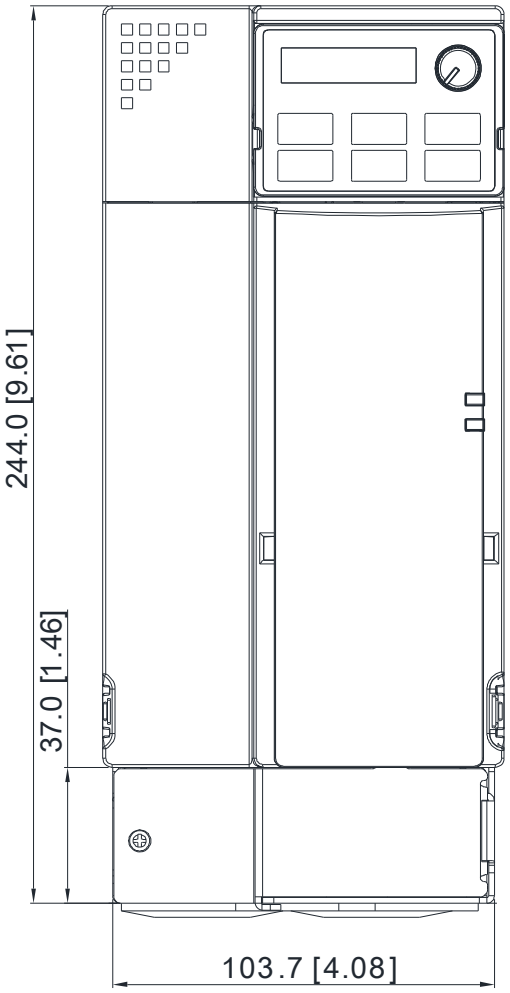

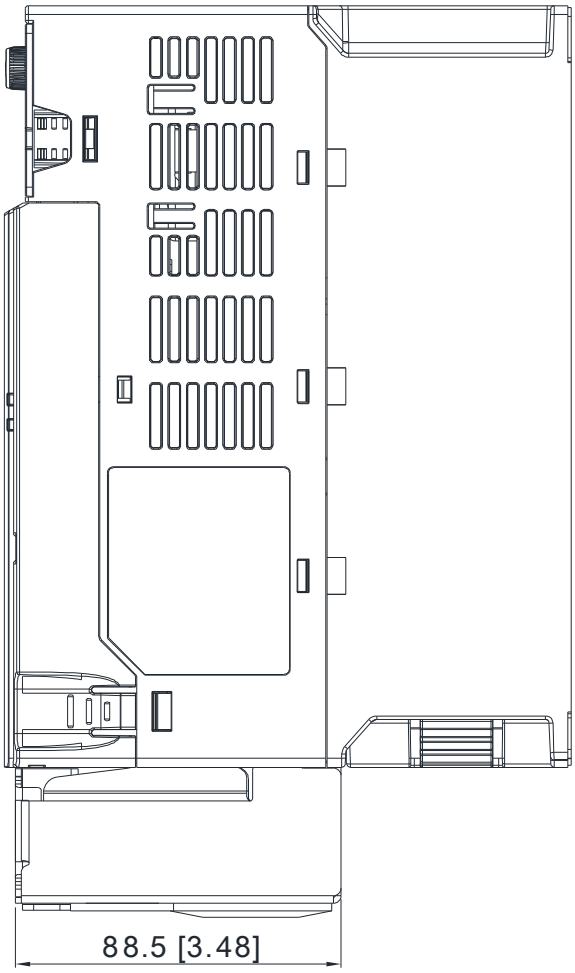

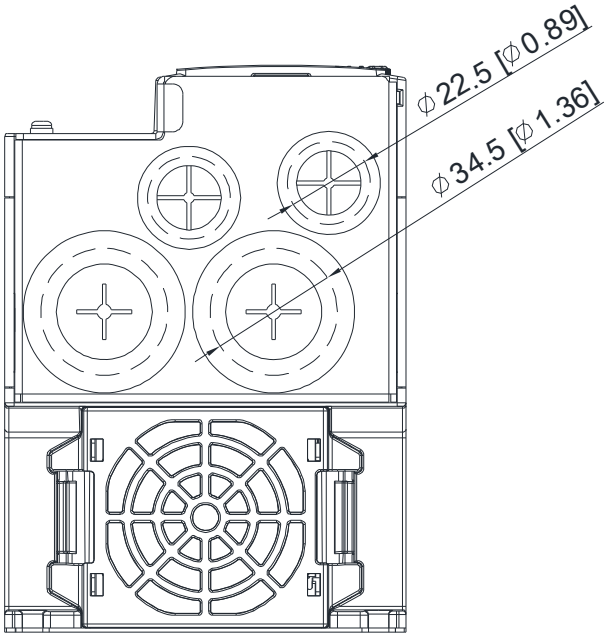

Unit: mm [inch.]

Frame E

Model of conduit box: MKM-CBE

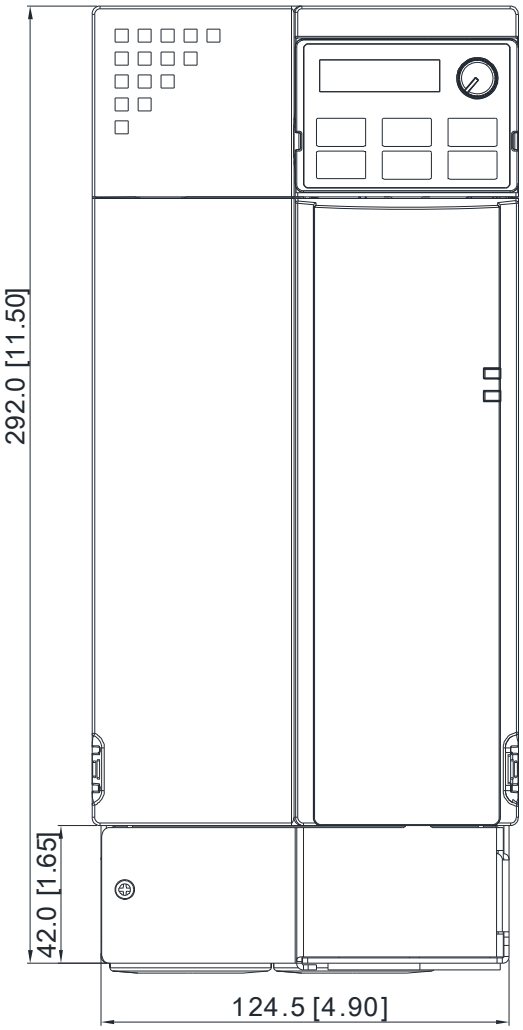

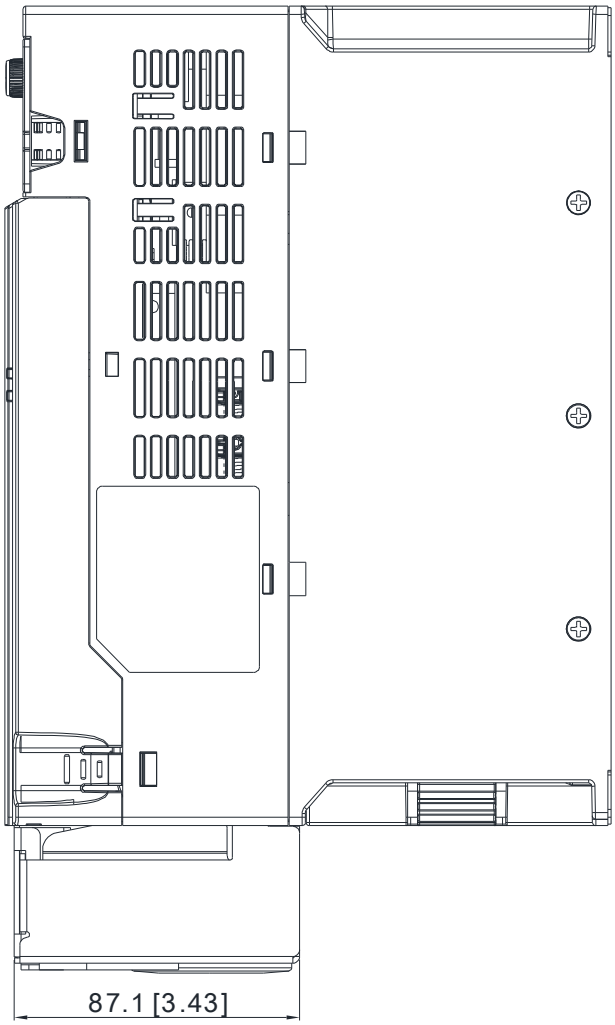

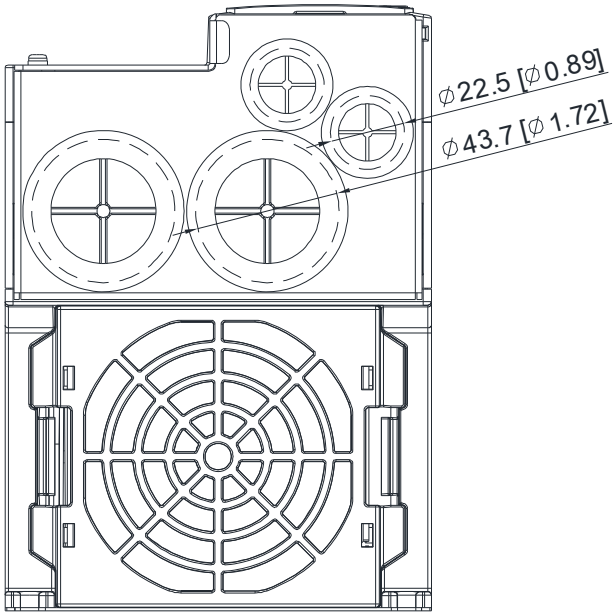

Unit: mm [inch.]

Frame F

Model of conduit box: MKM-CBF

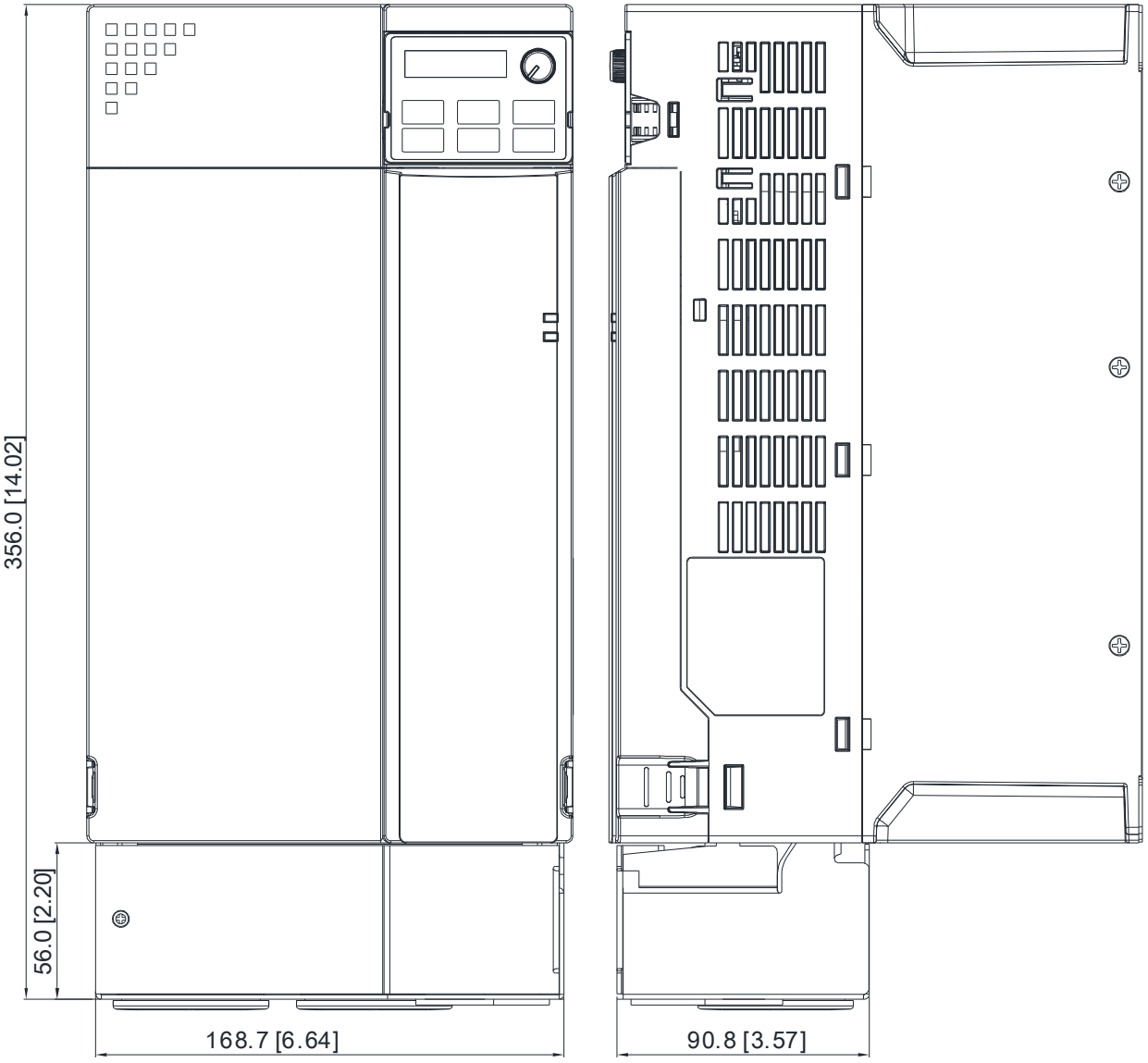

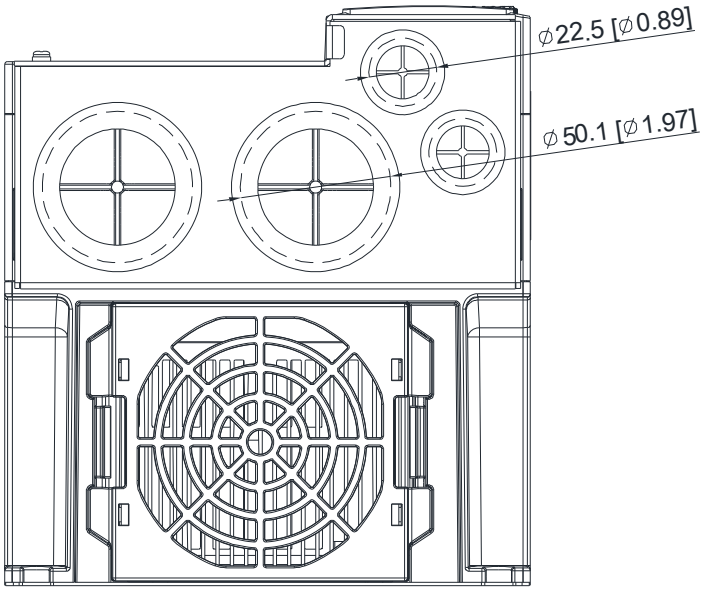

Unit: mm [inch.]

Installation:

Recommended screw torque:

M3: 4-6 kg-cm / [3.5-5.2 lb-in.] / [0.39-0.59 Nm]

M3.5: 4-6 kg-cm / [3.5-5.2 lb-in.] / [0.39-0.59 Nm]

M4: 6-8 kg-cm / [5.2-6.9 lb-in.] / [0.59-0.78 Nm]

Frame A

1)

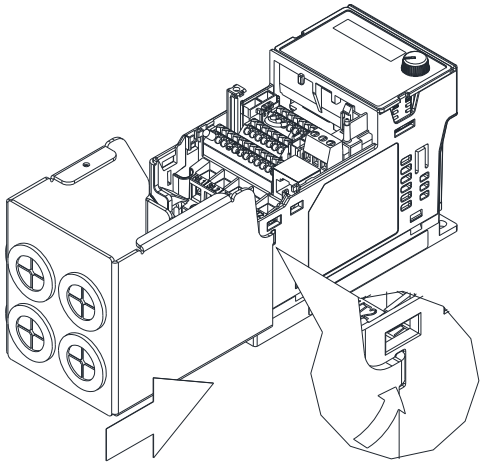

2)

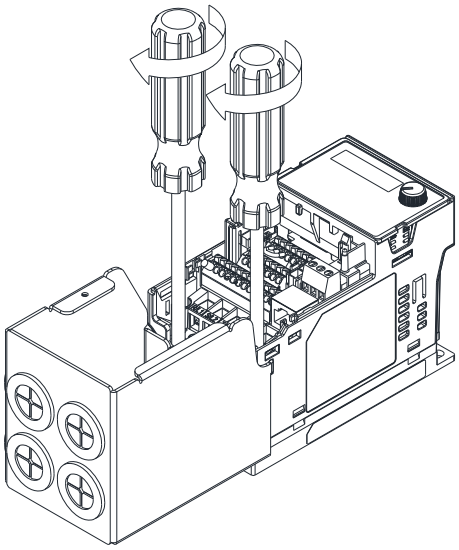

3)

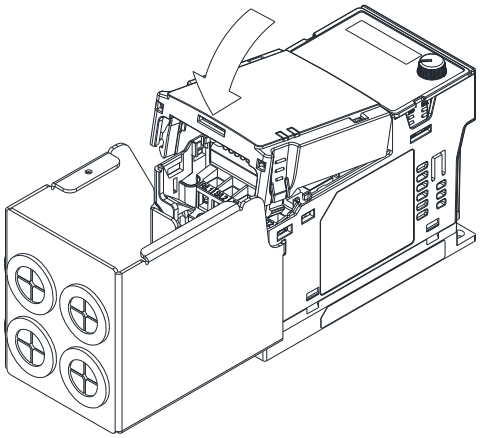

4)

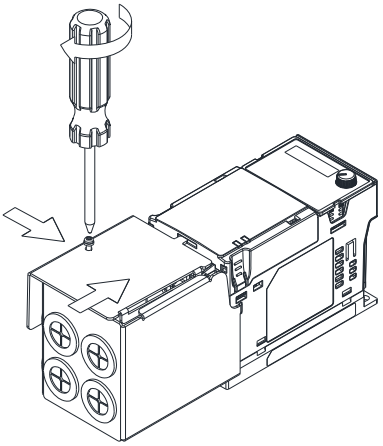

5)

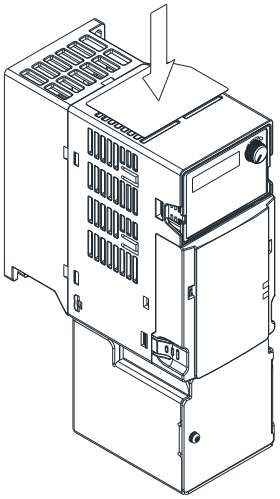

Frame B~F

1)

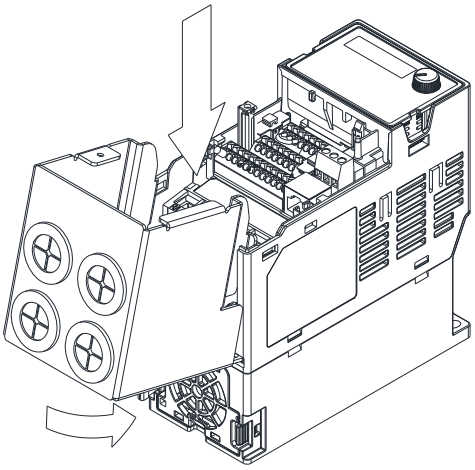

2)

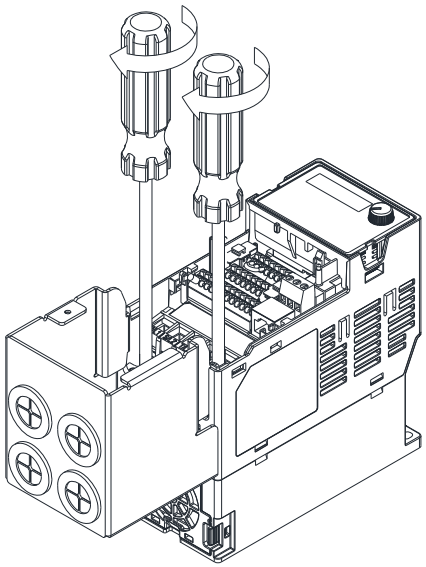

3)

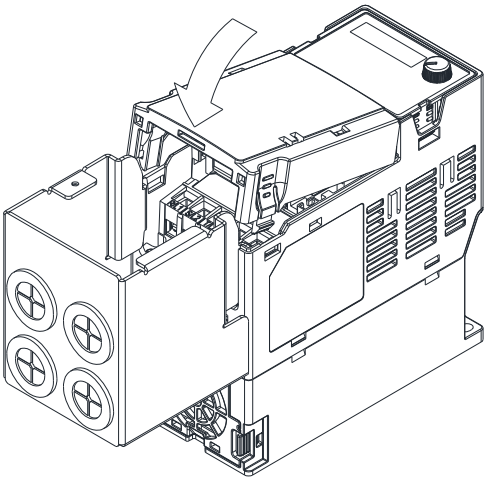

4)

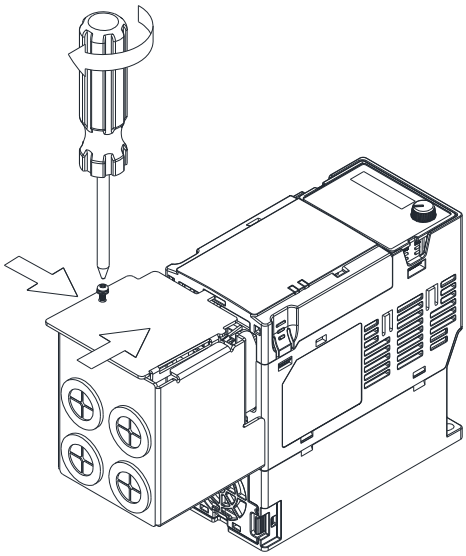

5)

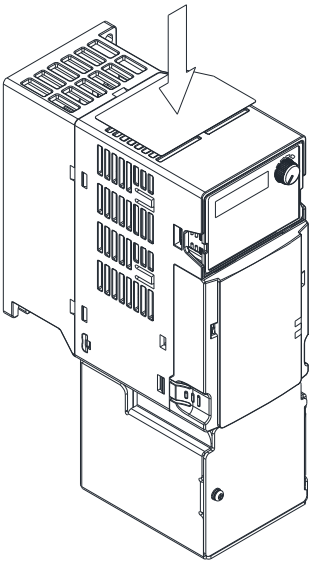

7-10 Fan Kit

Frame	Fan Model	Fan Kit
A	MKM-FKMA	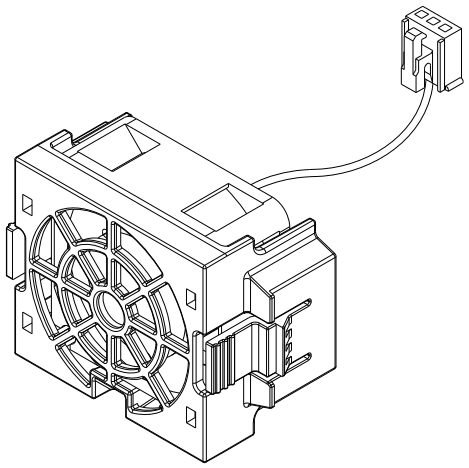
B	MKM-FKMB	
C	MKM-FKMC	
D	MKM-FKMD	
E	MKM-FKME	
F	MKM-FKMF	

Fan Removal

1. As shown in figure on the right, press the tabs on both sides of the fan to remove it.	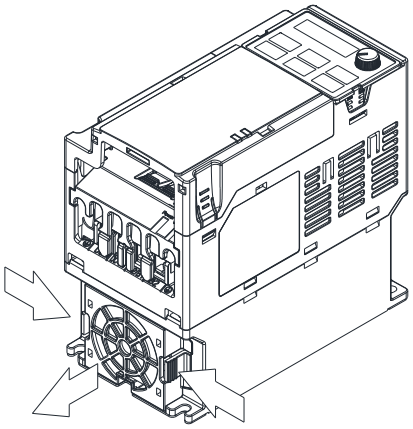
2. Disconnect the power cable when removing the fan.	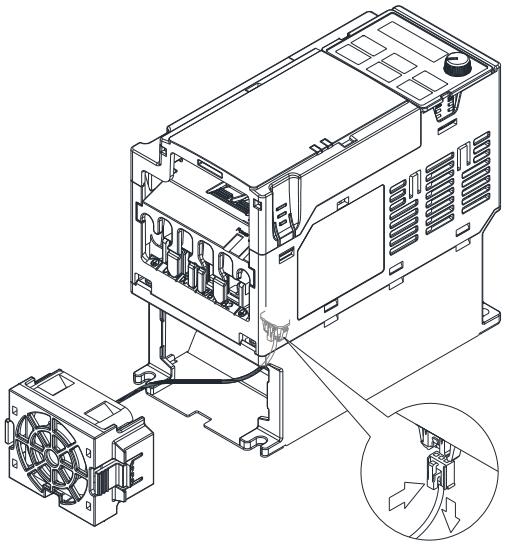

7-11 Keypad Panel Mounting

KPMS-LE01

Method 1: Direct installation on a plate (unit: mm [inch])

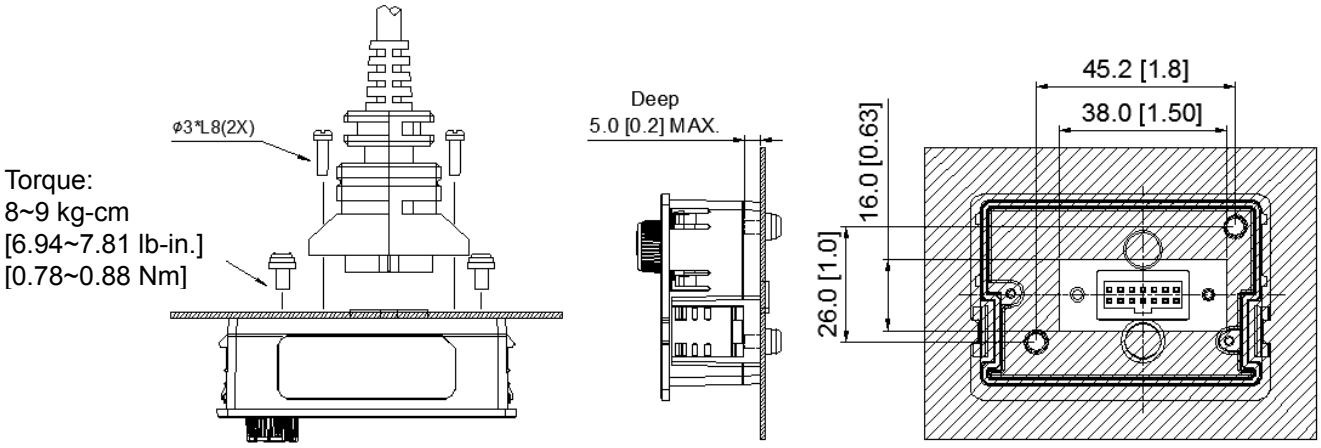

Method 2: Mounting through a plate (unit: mm [inch])

Thickness = 1.2 [0.05] or 2.0 [0.08]

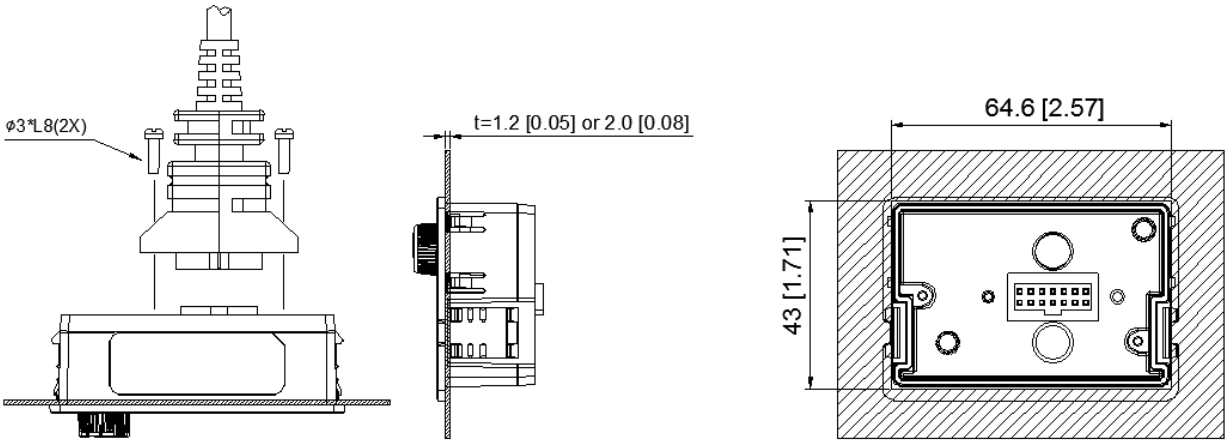

※ The extension cable models and cable length specifications are in the following table：

Models	Extension Cable Length (Unit：mm [inch])
EG0610C	600 [23.62]
EG1010C	1000 [39.37]
EG2010C	2000 [78.74]
EG3010C	3000 [118.11]
EG5010C	5000 [196.85]

7-12 DIN-Rail Mounting

MKM-DRB (applicable for Frame A and Frame B)

Screw	Torque
M4*2PCS	8~10 kg-cm [6.9~8.7 lb-in.] [0.7 ~0 98 Nm]

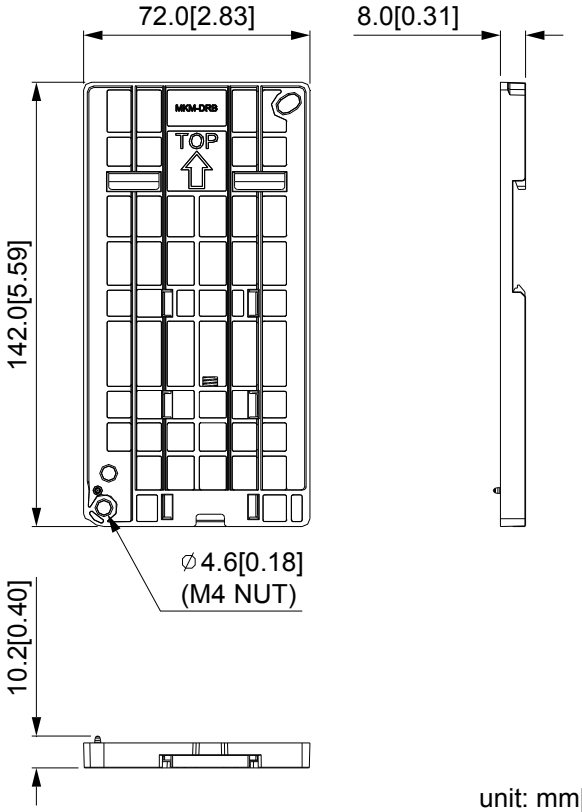

unit: mm[inch]

MKM-DRC (applicable for Frame C)

Screw	Torque
M5*4PCS	10~12 kg-cm [8.7~10.4 lb-in.] [0.98~1.18 Nm]

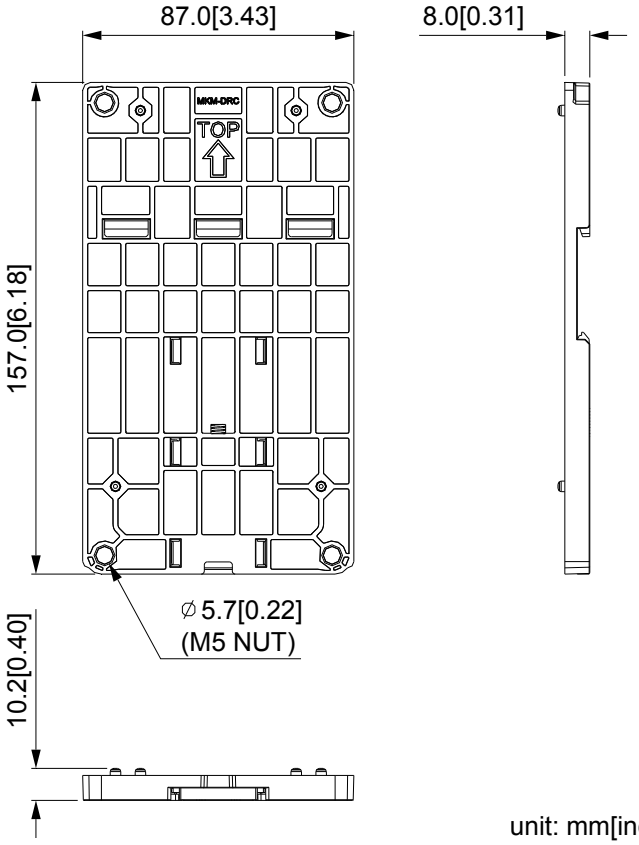

unit: mm[inch]

Installation

	Screw	Torque
MKM-DRB	M4*P0.7*2PCS	8~10 kg-cm [6.9~8.7 lb-in.] [0.78~0.98 Nm]
MKM-DRC	M5*P0.8*4PCS	10~12 kg-cm [8.7~10.4 lb-in.] [0.98~1.18 Nm]

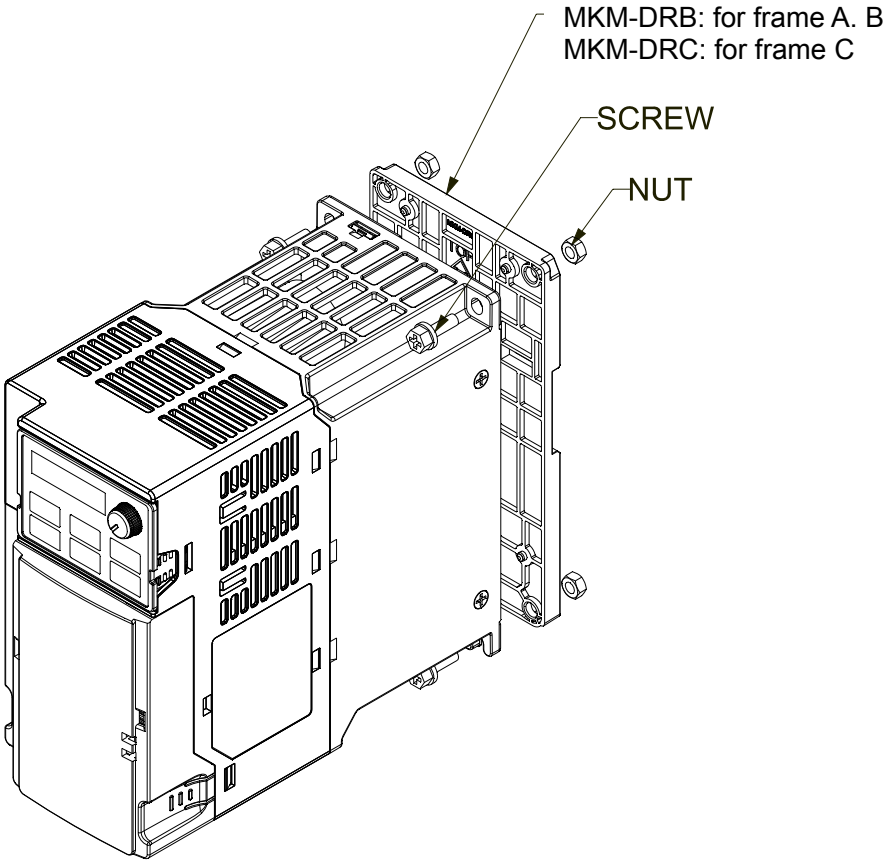

7-13 Mounting Adapter Plate

This mounting adapter accessory is to change the wiring way of MS300/MH300 series to provide flexible installation. It changes the wiring from mains input/motor output at the bottom to mains input from the top and motor output from the bottom. When you change drive from VFD-E / VFD-EL series to MS300 / MH300 series, you can use original wiring method, the correspondence table is showing as below.

Series / Models	MS/MH300	VFD-E	VFD-EL
MKM-MAPB	Frame A~B	Frame A	Frame A
MKM-MAPC	Frame C	Frame B	Frame B

MKM-MAPB:
Applicable for Frame A and B

Installation

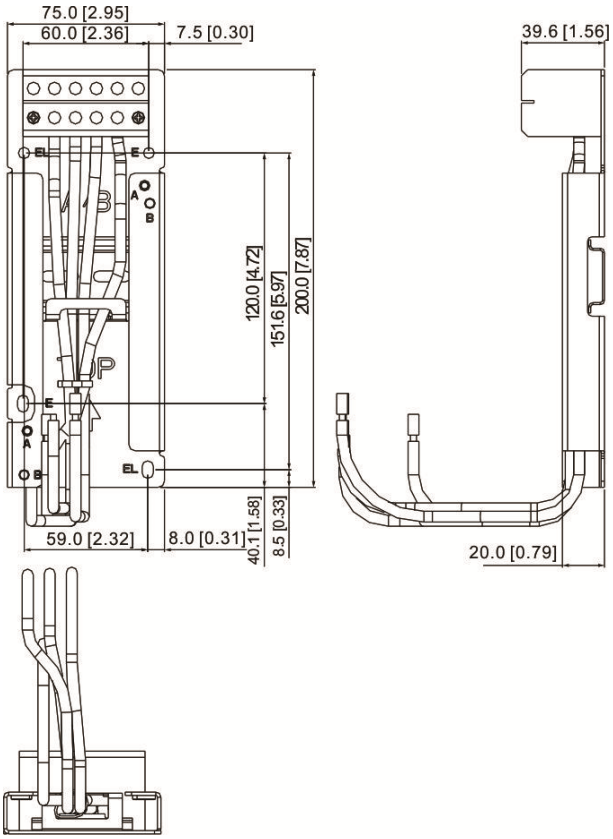

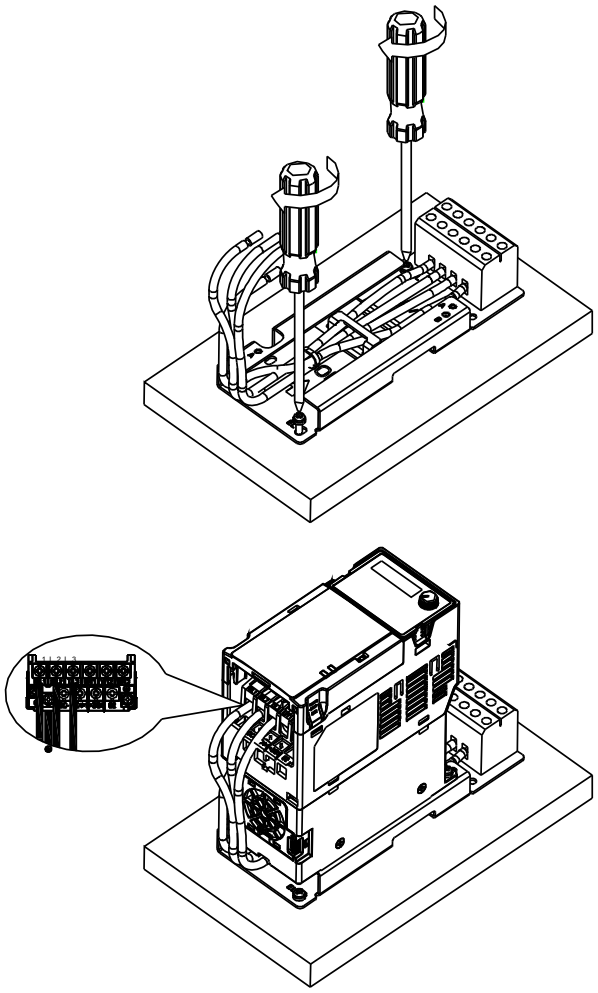

Unit: mm [inch]

Screw	Torque
M4	14~16 kg-cm / [12.2~13.9 lb-in.] / [1.37~1.56 Nm]
M5	16~20 kg-cm / [13.9~17.4 lb-in.] / [1.56~1.96 Nm]

MKM-MAPC:
Applicable for frame C

Installation

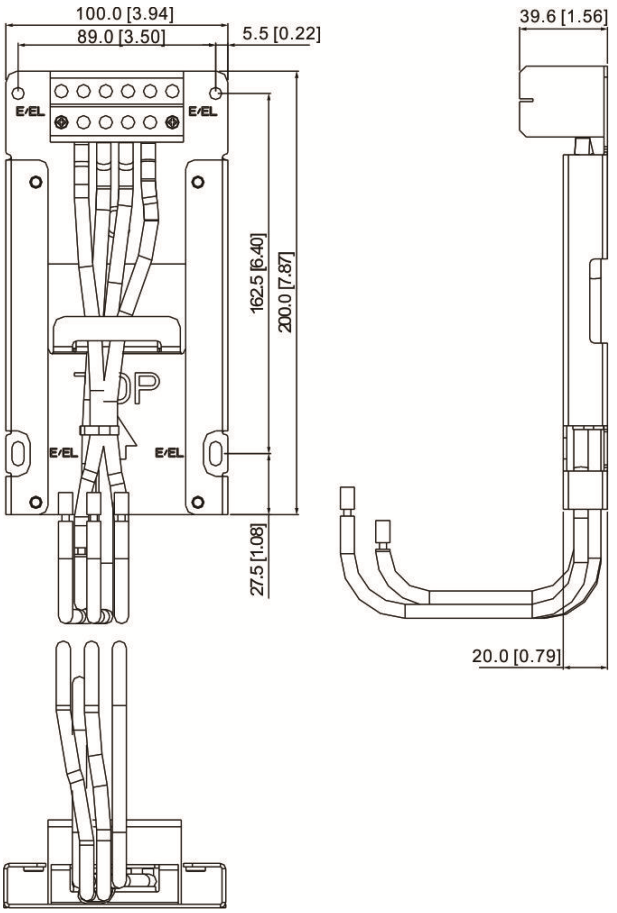

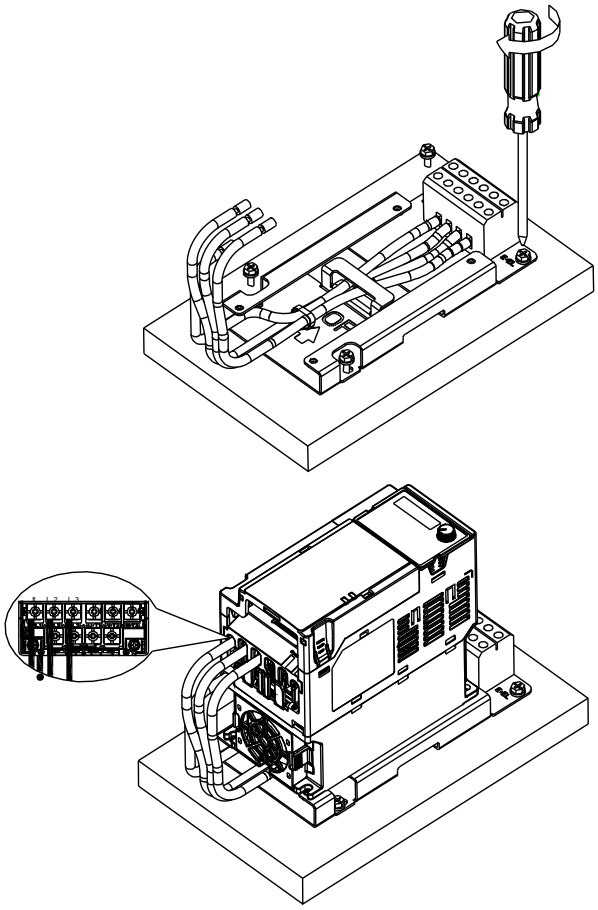

Unit: mm [inch]

Screw	Torque
M4	14~16 kg-cm / [12.2~13.9 lb-in.] / [1.37~1.56 Nm]
M5	16~20 kg-cm / [13.9~17.4 lb-in.] / [1.56~1.96 Nm]

[This page intentionally left blank]

Chapter 8 Option Cards

8-1 Option Card Installation

8-2 CMM-MOD01 Modbus/TCP option card

8-3 CMM-PD01 PROFIBUS option card

8-4 CMM-DN01 DeviceNet option card

8-5 CMM-EIP01 Modbus TCP/EtherNet IP option card

8-6 CMM-COP01 CANopen option card

8-7 EMM-BPS01 Back-up Power Supply card

The option cards mentioned in this chapter are optional items. Please select applicable option cards for your drive or contact your local distributor for suggestion. The option cards can improve the performance of the drive significantly.

To prevent damage to the drive during installation of the option cards, please remove the cover before wiring.

8-1 Option Card Installation

1. Switch off the power supply.
2. Open the front cover of the drive.
3. As shown in Fig. 8-1, aim the two clips at the option card fixed fitting.
   Press the fixed fitting to clip the slot.

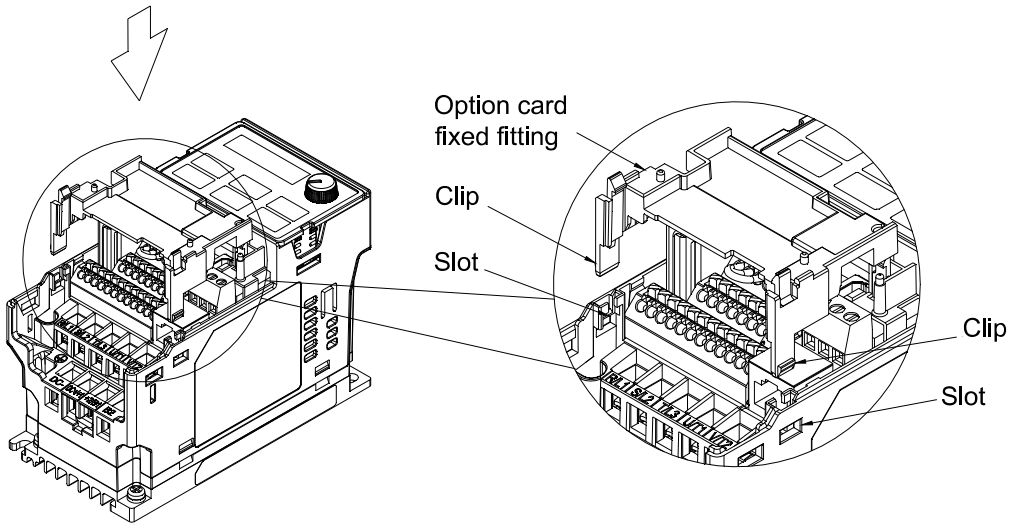

Fig. 8-1

4. As shown in Fig. 8-2, aim the three holes at the positioning pin.
   Press the pin to clip the holes with the option card.

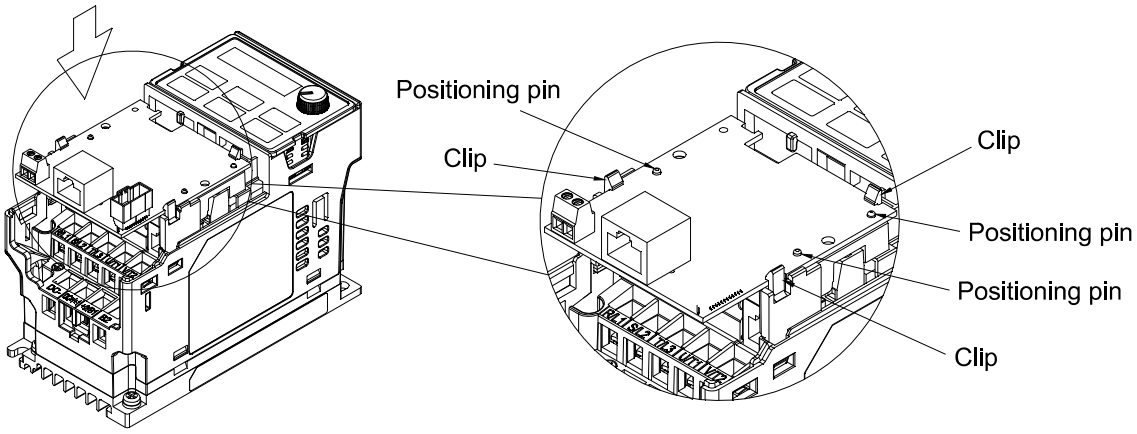

Fig. 8-2

5. Wiring after the option card fixed fitting is clipped with the holes (see NOTE).
   Fasten the screw to fix the option card before wiring (shown in Fig. 8-3). Torque:4~6 kg-cm [3.5~5.2 lb-in] / [0.39~0.59 Nm]. While the wiring is finished, the front cover cannot put it back on directly but needs to assembly the option card reversely. Please refer to the subsequent steps to complete the installation.

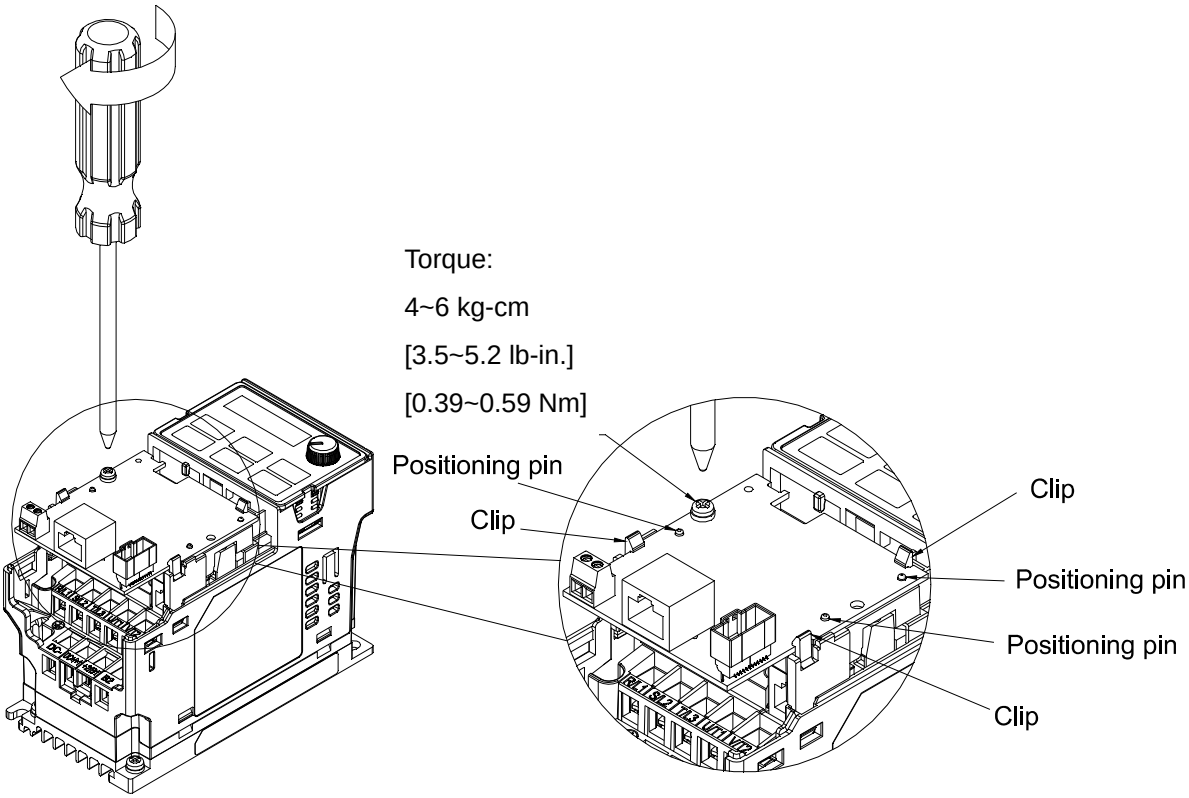

Fig. 8-3

6. After the wiring is completed, loosen the option card of the front mounting，and reverse-mounted, aim the three holes at the positioning pin, press the pin to clip the holes with the option card. (shown in Fig. 8-4)

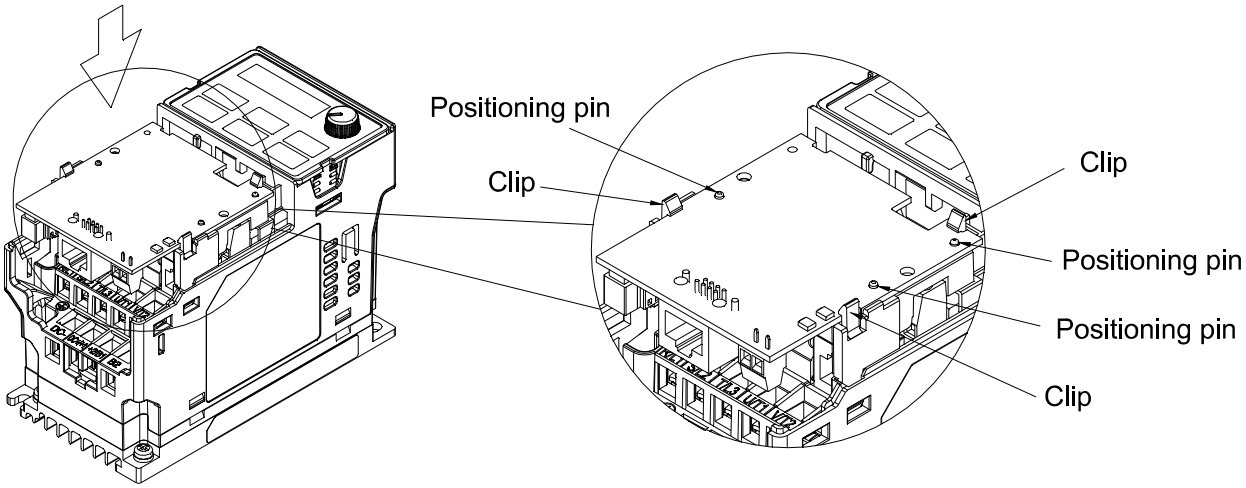

Fig. 8-4

7. Fasten the screw after the option card fixed fitting is clipped with the holes. (shown in Fig. 8-5)

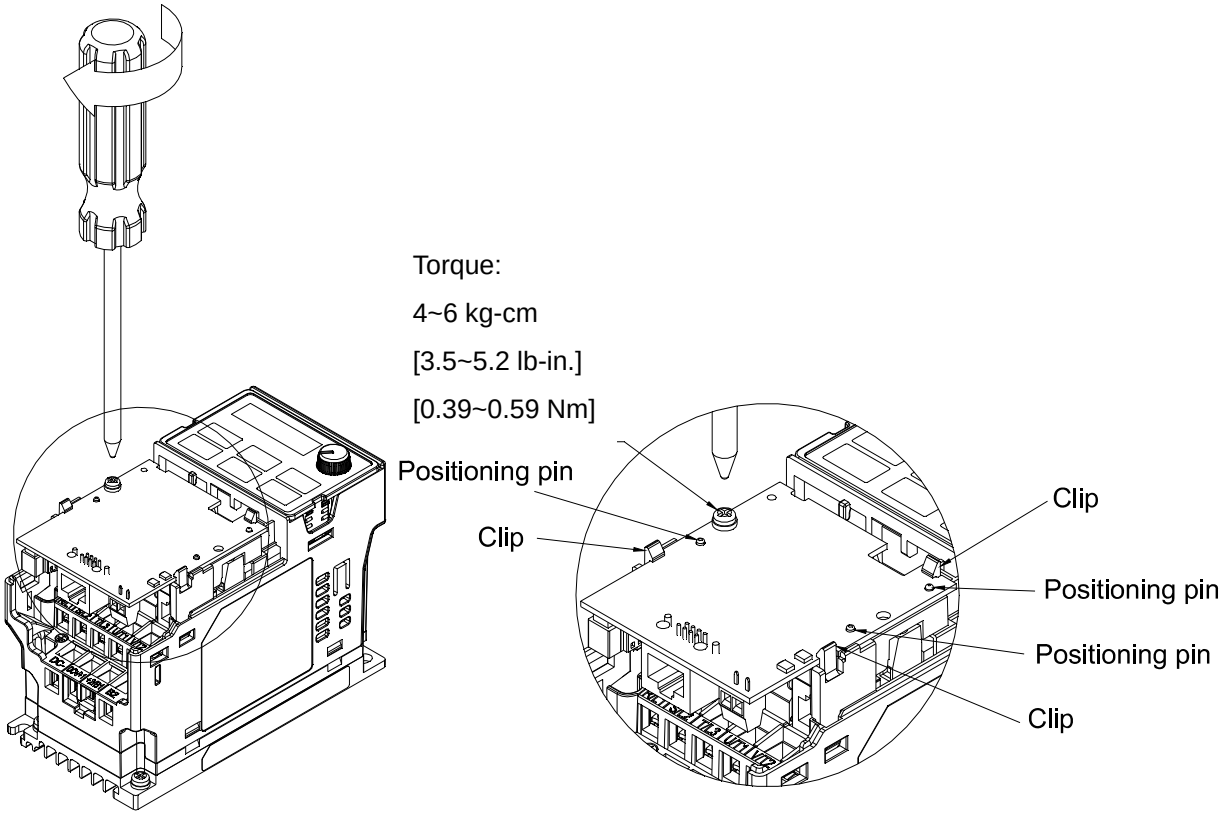

Fig. 8-5

8. Installation is completed (shown in Fig. 8-6). Put the front cover back on.

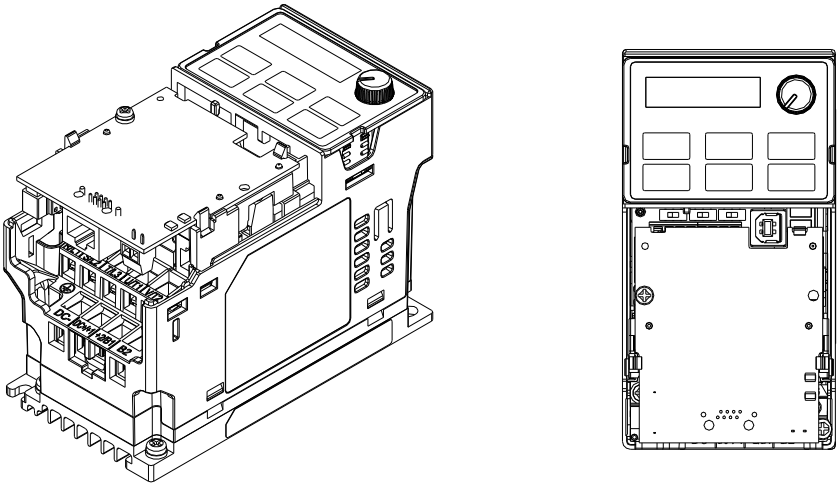

Fig. 8-6

NOTE

- The option cards listed below must connect to ground when wiring. The ground terminal is enclosed with option card as shown in Fig. 8-7.

  1. CMM-MOD01
  2. CMM-PD01
  3. CMM-DN01
  4. CMM-EIP01

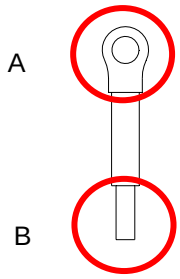

Fig. 8-7
Ground terminal

- Installation of the ground terminal:
  B side of the ground terminal connects to the ground terminal block on option card as No.6 of CMM-MOD01 shown in Fig. 8-8, and see each section in Chapter 8 for ground terminal blocks of other option cards; A side of the ground terminal connects to the PE on the drive as red circles shown in Fig. 8-9 ~ 8-11.

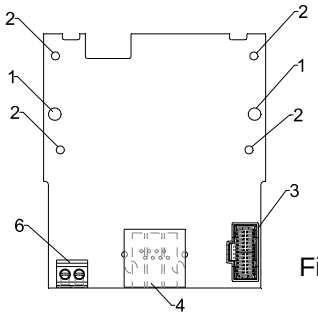

Fig. 8-8

Frame A~C

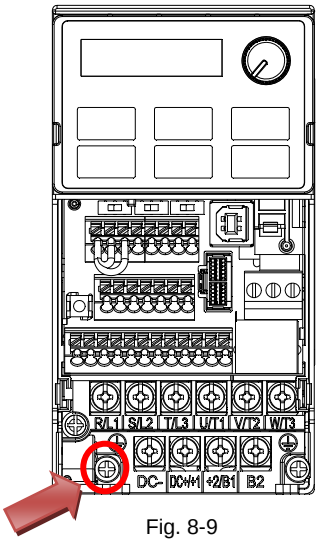

Fig. 8-9

Torque (±10%)
Frame A: 9 kg-cm [7.8 lb-in.] [0.88 Nm]
Frame B: 15 kg-cm [13.0 lb-in.] [1.47 Nm]
Frame C: 20 kg-cm [17.4 lb-in.] [1.96 Nm]

Frame D~E

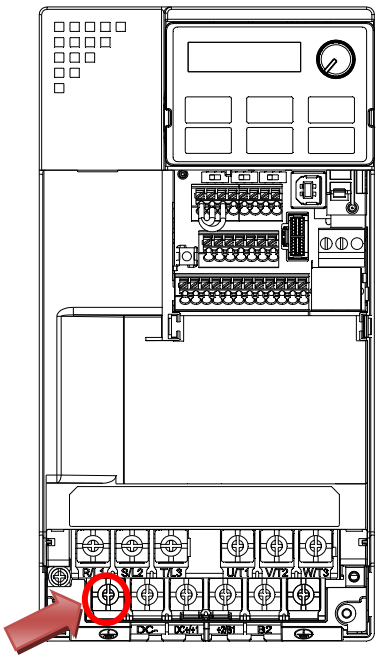

Fig. 8-10

Torque (±10%)
Frame D: 20 kg-cm [17.4 lb-in.] [1.96 Nm]
Frame E: 25 kg-cm [21.7 lb-in.] [2.45 Nm]

Frame F

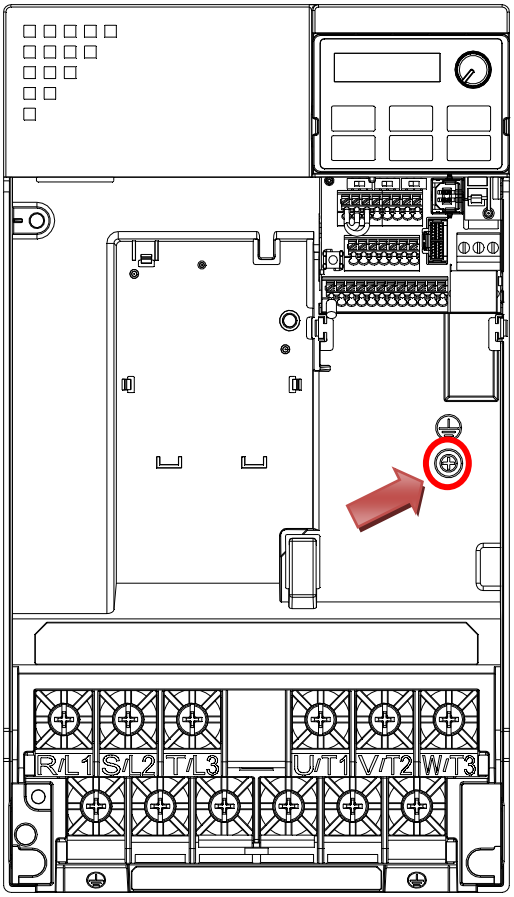

Fig. 8-11

Torque (±10%)
Frame F: 7 kg-cm [6.1 Ib-in.] [0.69 Nm]

8-2 CMM-MOD01 Modbus TCP option card

■ Features

1. Supports Modbus TCP protocol
2. MDI / MDI-X auto-detect
3. Baud rate:10 / 100 Mbps
4. E-mail alarm
5. AC motor drive keypad / Ethernet configuration
6. Virtual serial port

■ Product Profile

1. Screw fixing hole
2. Positioning hole
3. AC motor drive connection port
4. Communication port
5. Indicator
6. Ground terminal block

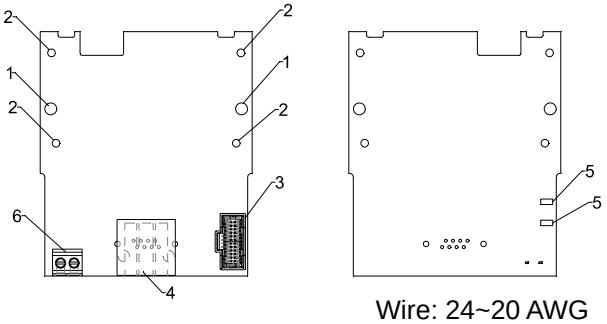

Wire: 24~20 AWG

Torque: 2 kg-cm / [1.7 lb-in.] / [0.2 Nm]

■ Specifications

Network Interface

Interface	RJ-45 with Auto MDI / MDIX
Number of ports	1 Port
Transmission method	IEEE 802.3, IEEE 802.3u
Transmission cable	Category 5e shielding 100 M
Transmission speed	10 / 100 Mbps Auto-Detect
Network protocol	ICMP, IP, TCP, UDP, DHCP, SMTP, MODBUS OVER TCP / IP, Delta Configuration

Electrical Specification

Power supply voltage	5 VDC (supplied by AC motor drive)
Insulation voltage	500 VDC
Power consumption	0.8 W

Mechanical Specification

Weight	25 g

Environment

Noise immunity	ESD (IEC 61800-5-1, IEC 6100-4-2) EFT (IEC 61800-5-1, IEC 6100-4-4) Surge Test (IEC 61800-5-1, IEC 6100-4-5) Conducted Susceptibility Test (IEC 61800-5-1, IEC 6100-4-6)
Operation / Storage	Operation: -10°C ~ 50°C (temperature)，90% (humidity) Storage: -25°C ~ 70°C (temperature)，95% (humidity)
Shock / Vibration resistance	International standards: IEC 61800-5-1, IEC 60068-2-6 / IEC 61800-5-1, IEC 60068-2-27

■ Communication Parameters for VFD-MS300 Connected to EtherNet

When VFD-MS300 links to EtherNet, please set up the communication parameters based on the table below. The EtherNet master will be able to read/write frequency command word and operation command word to VFD-MS300 after the communication parameters are set.

Parameter	Function	Current Set Value	Definition of Parameter Values
00-20	Setting for source of frequency command	8	The frequency command is controlled by communication card
00-21	Setting for source of operation command	5	The operation command is controlled by communication card
09-30	Decoding method for communication	0	Decoding method for Delta AC motor drive
09-75	IP setting	0	Static IP(0) / Dynamic distribution IP(1)
09-76	IP address -1	192	IP address 192.168.1.5
09-77	IP address -2	168	IP address 192.168.1.5
09-78	IP address -3	1	IP address 192.168.1.5
09-79	IP address -4	5	IP address 192.168.1.5
09-80	Netmask -1	255	Netmask 255.255.255.0
09-81	Netmask -2	255	Netmask 255.255.255.0
09-82	Netmask -3	255	Netmask 255.255.255.0
09-83	Netmask -4	0	Netmask 255.255.255.0
09-84	Default gateway -1	192	Default gateway 192.168.1.1
09-85	Default gateway -2	168	Default gateway 192.168.1.1
09-86	Default gateway -3	1	Default gateway 192.168.1.1
09-87	Default gateway -4	1	Default gateway 192.168.1.1

■ Basic Registers

BR#	R/W	Content	Set Value
#0	R	Model name	Set up by the system. The model code of CMM-MOD01=H'0203
#1	R	Firmware version	Displaying the current firmware version in hex, e.g. 0100h indicates firmware version V1.00
#2	R	Release date of the version	Displaying the data in decimal form. 10,000s digit and 1,000s digit are for "month"; 100s digit and 10s digit are for "day". For 1 digit: 0 = morning; 1 = afternoon
#11	R/W	MODBUS Timeout	Pre-defined setting: 500 (ms)
#13	R/W	Keep Alive Time	Pre-defined setting: 30 (s)

■ LED Indicator & Troubleshooting

LED Indicators

LED	Status		Indication	Processing Methods
POWER	Green	On	Power supply in normal status	No action is required
POWER	Green	Off	No power supply	Check the power supply
LINK	Green	On	Network connection in normal status	No action is required
		Flashes	Network in operation	No action is required
		Off	Network not connected	Check if the network cable is connected

Troubleshooting

Abnormality	Cause	Processing Methods
POWER LED off	AC motor drive not powered	Check if AC motor drive is powered, and if the power supply is normal.
	CMM-MOD01 not connected to AC motor drive	Make sure CMM-MOD01C is connected to AC motor drive.
LINK LED off	Not connected to network	Make sure the network cable is correctly connected to network.
	Poor contact to RJ-45 connector	Make sure RJ-45 connector is connected to Ethernet port.
No module found	CMM-MOD01 not connected to network	Make sure CMM-MOD01 is connected to the network.
	PC and CMM-MOD01 in different networks and blocked by network firewall.	Search by IP or set up relevant settings via the AC motor drive keypad.
Fail to open CMM-MOD01 setup page	CMM-MOD01 not connected to network	Make sure CMM-MOD01 is connected to the network.
	Incorrect communication setting in DCISoft	Make sure the communication setting in DCISoft is set to Ethernet.
	PC and CMM-MOD01 in different networks and blocked by network firewall.	Conduct the setup via the AC motor drive keypad.
Able to open CMM-MOD01 setup page but fail to utilize webpage monitoring	Incorrect network setting in CMM-MOD01	Check if the network setting for CMM-MOD01 is correct. For the Intranet setting in your company, please consult your IT staff. For the Internet setting at home, please refer to the network setting instruction provided by your ISP.
Fail to send e-mail	Incorrect network setting in CMM-MOD01	Check if the network setting for CMM-MOD01 is correct.
	Incorrect mail server setting	Please confirm the IP address for SMTP-Server.

8-3 CMM-PD01 PROFIBUS option card

■ Features

1. Supports PZD control data exchange.
2. Supports PKW polling AC motor drive parameters.
3. Supports user diagnosis function.
4. Auto-detects baud rates; supports Max. 12 Mbps.

■ Product File

1. Screw fixing hole
2. Positioning hole
3. AC motor drive connection port
4. Communication port
5. Indicator
6. Ground terminal block

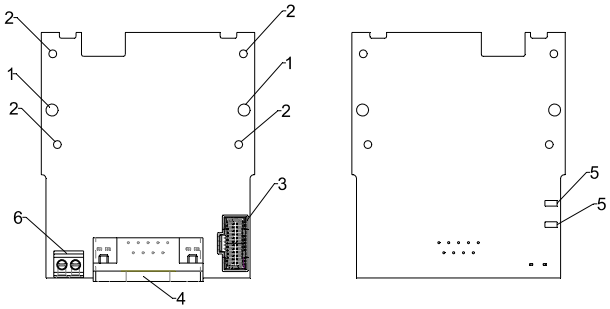

Wire: 24~20 AWG

Torque: 2 kg-cm / [1.7 Ib-in.] / [0.2 Nm]

■ Specifications

PROFIBUS DP Connector

Interface	DB9 connector
Transmission	High-speed RS-485
Transmission cable	Shielded twisted pair cable
Electrical isolation	500 VDC

Communication

Message type	Cyclic data exchange
Module name	CMM-PD01
GSD document	DELA08DB.GSD
Product ID	08DB (HEX)
Serial transmission speed supported (auto-detection)	9.6 kbps; 19.2 kbps; 93.75 kbps; 187.5 kbps; 125 kbps; 250 kbps; 500 kbps; 1.5 Mbps; 3 Mbps; 6 Mbps; 12 Mbps (bit per second)

Electrical Specification

Power supply	5 VDC (supplied by AC motor drive)
Insulation voltage	500 VDC
Power consumption	1 W

Mechanical Specification

Weight	28 g

Environment

Noise immunity	ESD (IEC 61800-5-1, IEC 6100-4-2) EFT (IEC 61800-5-1, IEC 6100-4-4) Surge Test (IEC 61800-5-1, IEC 6100-4-5) Conducted Susceptibility Test (IEC 61800-5-1, IEC 6100-4-6)
Operation / Storage	Operation: -10ºC ~ 50ºC (temperature), 90% (humidity) Storage: -25ºC ~ 70ºC (temperature), 95% (humidity)
Shock / Vibration resistance	International standards: IEC 61131-2, IEC 68-2-6 (TEST Fc) / IEC 61131-2 & IEC 68-2-27(TEST Ea)

■ Connector pin assignment

PIN	PIN name	Definition
1	-	Not defined
2	-	Not defined
3	Rxd / Txd-P	Sending / receiving data P(B)
4	-	Not defined
5	DGND	Data reference ground
6	VP	Power voltage – positive
7	-	Not defined
8	Rxd / Txd-N	Sending / receiving data N(A)
9	-	Not defined

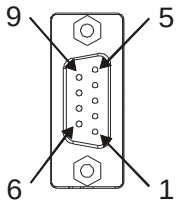

■ LED Indicator & Troubleshooting

There are 2 LED indicators on CMM-PD01：POWER LED and NET LED. POWER LED displays the status of the working power. NET LED displays the connection status of the communication.

POWER LED

LED status	Indication	Processing Methods
Green light on	Power supply in normal status.	No action is required
Off	No power	Check if the connection between CMM-PD01 and AC motor drive is normal.

NET LED

LED status	Indication	Processing Methods
Green light on	Normal status	No action is required
Red light on	CMM-PD01 is not connected to PROFIBUS DP bus.	Connect CMM-PD01 to PROFIBUS DP bus.
Red light flashes	Invalid PROFIBUS communication address	Set the PROFIBUS address of CMM-PD01 between 1 ~ 125 (decimal)
Orange light flashes	CMM-PD01 fails to communicate with AC motor drive.	Switch off the power and check whether CMM-PD01 is installed correctly and connected normally to the AC motor drive.

8-4 CMM-DN01 DeviceNet option card

■ Functions

1. Based on the high-speed communication interface of Delta's HSSP protocol, the AC motor drive can be controlled in real-time.
2. Supports Group 2 only connection and polling I/O data exchange.
3. For I/O mapping, supports max. 32 words input and 32 words output.
4. Supports EDS file configuration in DeviceNet configuration software.
5. Supports all Baud rates on DeviceNet bus: 125 kbps, 250 kbps, 500 kbps and extendable Baud rate mode.
6. Node address and Baud rate can be set up in the AC motor drive.
7. Power supplied from AC motor drive.

■ Product Profile

1. Screw fixing hole
2. Positioning hole
3. AC motor drive connection port
4. Communication Port
5. Indicator
6. Ground terminal block

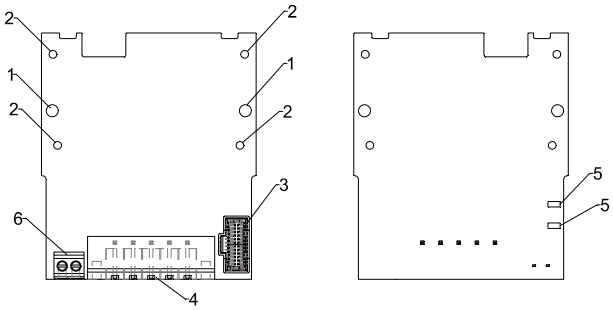

Wire: 24~20 AWG

Torque: 2 kg-cm / [1.7 Ib-in.] / [0.2 Nm]

■ Specifications

DeviceNet Connector

Interface	5-PIN open pluggable connector. PIN interval: 5.08 mm
Transmission method	CAN
Transmission cable	Shielded twisted pair cable (with 2 power cables)
Transmission speed	125 kbps, 250 kbps, 500 kbps and extendable baud rate mode
Network protocol	DeviceNet protocol

AC Motor Drive Connection Port

Interface	50 PIN communication terminal
Transmission method	SPI communication
Terminal function	1. Communication module communicates with AC motor drive via this port. 2. AC motor drive provides power supply to communication module via this port.
Communication protocol	Delta HSSP protocol

Electrical Specification

Power supply voltage	5 VDC (supplied by AC motor drive)
Insulation voltage	500 VDC
Communication wire power consumption	0.85 W
Power consumption	1 W

Mechanical Specification

Weight	23 g

Environment

Noise immunity	ESD (IEC 61800-5-1, IEC 6100-4-2) EFT (IEC 61800-5-1, IEC 6100-4-4) Surge Test (IEC 61800-5-1, IEC 6100-4-5) Conducted Susceptibility Test (IEC 61800-5-1, IEC 6100-4-6)
Operation / Storage	Operation: -10ºC ~ 50ºC (temperature), 90% (humidity) Storage: -25ºC ~ 70ºC (temperature), 95% (humidity)
Shock / Vibration resistance	International standards: IEC 61800-5-1, IEC 60068-2-6 / IEC 61800-5-1, IEC 60068-2-27

DeviceNet Connector

PIN	Signal	Color	Definition
1	V+	Red	24VDC
2	H	White	Signal+
3	S	-	Earth
4	L	Blue	Signal-
5	V-	Black	0V

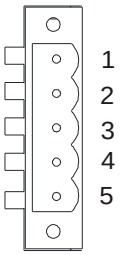

■ LED Indicator & Troubleshooting

There are 3 LED indicators on CMM-DN01. POWER LED displays the status of power supply. MS LED and NS LED are dual-color LEDs, displaying the connection status and error messages of the communication module.

POWER LED

LED status	Indication	Processing Methods
On	Power supply in abnormal status	Check the power supply of CMM-DN01
Off	Power supply in normal status	No action is required

NS LED

LED status	Indication	Processing Methods
Off	No power supply or CMM-DN01 has not completed MAC ID test yet.	1. Check the power of CMM-DN01 and see if the connection is normal. 2. Make sure there are at least one or more nodes on the bus. 3. Check if the Baud rate of CMM-DN01 is the same as that of the other nodes.
Green light flashes	CMM-DN01 is on-line but has not established connection to the master.	1. Configure CMM-DN01 to the scan list of the master. 2. Re-download the configured data to the master.
Green light on	CMM-DN01 is on-line and is normally connected to the master.	No action is required
Red light flashes	CMM-DN01 is on-line, but I/O connection is timed-out.	1. Check if the network connection is normal. 2. Check if the master operates normally.
Red light on	1. The communication is down. 2. MAC ID test failure. 3. No network power supply. 4. CMM-DN01 is off-line.	1. Make sure all MAC IDs on the network are not repeated. 2. Check if the network installation is normal. 3. Check if the Baud rate of CMM-DN01 is consistent with that of the other nodes. 4. Check if the node address of CMM-DN01 is illegal. 5. Check if the network power supply is normal.

MS LED

LED status	Indication	Processing Methods
Off	No power supply or being off-line	Check the power supply of CMM-DN01 and see if the connection is normal.
Green light flashes	Waiting for I/O data	Switch the master PLC to RUN status
Green light on	I/O data are normal	No action is required
Red light flashes	Mapping error	1. Reconfigure CMM-DN01 2. Re-power the AC motor drive
Red light on	Hardware error	1. See the error code on the drive's keypad. 2. Send back to the factory for repair if necessary.
Orange light flashes	CMM-DN01 is establishing connection with AC motor drive	If the flashing lasts for a long time, check if CMM-DN01 and the AC motor drive are correctly installed and normally connected to each other.

8-5 CMM-EIP01 Modbus TCP/EtherNet IP option card

■ Features

1. Supports MODBUS TCP and Ethernet / IP protocol
2. MDI / MDI-X auto-detect
3. Baud rate: 10 / 100 Mbps auto-detect
4. E-mail alarm
5. AC motor drive keypad / Ethernet configuration
6. Virtual serial port

■ Product Profile

1. Screw fixing hole
2. Positioning hole
3. AC motor drive connection port
4. Communication port
5. Indicator
6. Ground terminal block

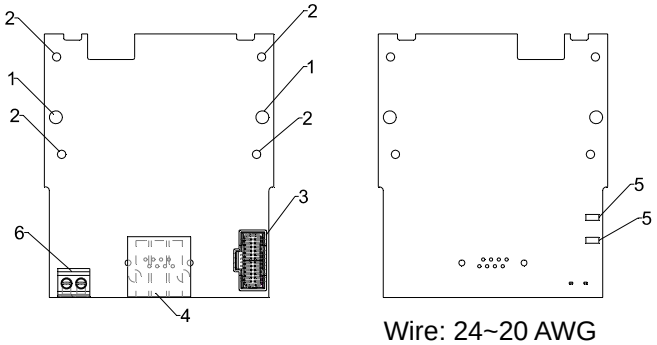

Wire: 24~20 AWG

Torque: 2 kg-cm / [1.7 lb-in.] / [0.2 Nm]

■ Specifications

Network Interface

Interface	RJ-45 with Auto MDI / MDIX
Number of ports	1 Port
Transmission method	IEEE 802.3, IEEE 802.3u
Transmission cable	Category 5e shielding 100 M
Transmission speed	10 / 100 Mbps Auto-Detect
Network protocol	ICMP, IP, TCP, UDP, DHCP, HTTP, SMTP, MODBUS OVER TCP / IP, EtherNet / IP, Delta Configuration

Electrical Specification

Insulation voltage	500 VDC
Power consumption	0.8 W
Power supply voltage	5 VDC

Mechanical Specification

Weight	25 g

Environment

Noise immunity	ESD (IEC 61800-5-1, IEC 61000-4-2) EFT (IEC 61800-5-1, IEC 61000-4-4) Surge Test (IEC 61800-5-1, IEC 61000-4-5) Conducted Susceptibility Test (IEC 61800-5-1, IEC 61000-4-6)
Operation / Storage	Operation: -10°C ~ 50°C (temperature), 90% (humidity) Storage: -25°C ~ 70°C (temperature), 95% (humidity)
Shock / Vibration resistance	International standard: IEC 61800-5-1, IEC 60068-2-6 / IEC 61800-5-1, IEC 60068-2-27

■ Installation

Connecting CMM-EIP01 to Network

1. Switch off the power supply.
2. Open the front cover of the drive.
3. Connect CAT-5e network cable to RJ-45 port on CMM-EIP01 (shown in Figure 2).

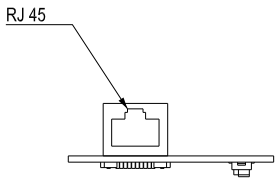

Figure 2

RJ-45 PIN Definition

PIN	Signal	Definition
1	Tx+	Data transmit positive
2	Tx-	Data transmit negative
3	Rx+	Data receive positive
4	--	N/C

PIN	Signal	Definition
5	--	N/C
6	Rx-	Data receive negative
7	--	N/C
8	--	N/C

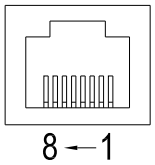

■ Communication Parameters for VFD-MS300 Connected to Ethernet

When VFD-MS300 links to Ethernet, please set up the communication parameters based on the table below. The Ethernet master will be able to read/write the frequency command word and operation command word of VFD-MS300 after the communication parameters are set.

Parameter	Function	Current Set Value	Definition of Parameter Values
00-20	Frequency command source	8	The frequency command is controlled by communication card.
00-21	Operation command source	5	The operation command is controlled by communication card.
09-30	Decoding method for communication	0	The decoding method for Delta AC motor drive
09-75	IP setting	0	Static IP(0) / Dynamic distribution IP(1)
09-76	IP address -1	192	IP address 192.168.1.5
09-77	IP address -2	168	IP address 192.168.1.5
09-78	IP address -3	1	IP address 192.168.1.5
09-79	IP address -4	5	IP address 192.168.1.5
09-80	Netmask -1	255	Netmask 255.255.255.0
09-81	Netmask -2	255	Netmask 255.255.255.0
09-82	Netmask -3	255	Netmask 255.255.255.0
09-83	Netmask -4	0	Netmask 255.255.255.0
09-84	Default gateway -1	192	Default gateway 192.168.1.1
09-85	Default gateway -2	168	Default gateway 192.168.1.1
09-86	Default gateway -3	1	Default gateway 192.168.1.1
09-87	Default gateway -4	1	Default gateway 192.168.1.1

■ LED Indicator & Troubleshooting

There are 2 LED indicators on CMM-EIP01: POWER LED and LINK LED. POWER LED displays the status of the working power, and LINK LED displays the connection status of the communication.

LED Indicators

LED	Status		Indication	Processing Methods
POWER	Green	On	Power supply in normal status	No action is required
		Off	No power supply	Check the power supply.
LINK	Green	On	Network connection in normal status	No action is required
		Flashes	Network in operation	No action is required
		Off	Network not connected	Check if the network cable is connected.

Troubleshooting

Abnormality	Cause	Processing Methods
POWER LED off	AC motor drive not powered	Check if AC motor drive is powered, and if the power supply is normal.
	CMM-EIP01 not connected to the AC motor drive	Make sure CMM-EIP01 is connected to the AC motor drive.
LINK LED off	CMM-EIP01 not connected to network	Make sure the network cable is correctly connected to network.
	Poor contact to RJ-45 connector	Make sure RJ-45 connector is connected to the Ethernet port.
No communication card found	CMM-EIP01 not connected to the network	Make sure CMM-EIP01 is connected to the network.
	PC and CMM-EIP01 in different networks and blocked by network firewall	Search by IP or set up relevant settings via the AC motor drive keypad.
Fail to open CMC-EIP01 setup page	CMM-EIP01 not connected to the network	Make sure CMM-EIP01 is connected to the network.
	Incorrect communication setting in DCISoft	Make sure the communication setting in DCISoft is set to Ethernet.
	PC and CMM-EIP01 in different networks and blocked by network firewall	Conduct the setup via the AC motor drive keypad.
Able to open CMC-EIP01 setup page but fail to utilize webpage monitoring	Incorrect network setting in CMM-EIP01	Check if the network setting for CMM-EIP01 is correct. For the Intranet setting in your company, please consult your IT staff. For the Internet setting at home, please refer to the network setting instruction provided by your supplier (ISP) .
Fail to send e-mail	Incorrect network setting in CMM-EIP01	Check if the network setting for CMM-EIP01 is correct.
	Incorrect mail server setting	Please confirm the IP address for the SMTP-Server.

8-6 CMM-COP01 CANopen option card

■ Product Profile

1. Screw fixing hole
2. Positioning hole
3. AC motor drive connection port
4. Communication port
5. Indicator
6. Ground terminal block

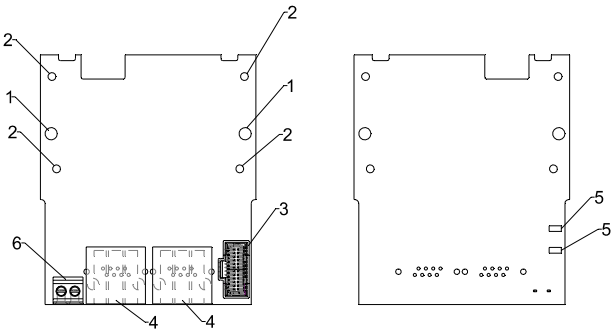

Wire: 24~20 AWG

Torque: 2 kg-cm / [1.7 lb-in.] / [0.2 Nm]

■ RJ-45 Pin definition

Socket

Pin	Signal	Description
1	CAN_H	CAN_H bus line (dominant high)
2	CAN_L	CAN_L bus line (dominant low)
3	CAN_GND	Ground / 0V / V-
7	CAN_GND	Ground / 0V / V-

■ Specifications

Interface	RJ-45
Number of ports	1 Port
Transmission method	CAN
Transmission cable	CAN standard cable
Transmission speed	1Mbps; 500 kbps; 250 kbps; 125 kbps; 100 kbps; 50 kbps
Communication protocol	CANopen protocol
Terminating resistance	Switch by SSW1 · SSW1 turn left the terminating resistance close, it needs to connect by external ; SSW1turn right the terminating resistance open then internal connection.

Electrical Specification

Insulation voltage	500 VDC
Power consumption	0.8 W
Power supply voltage	5 VDC

■ CANopen Communication Cable

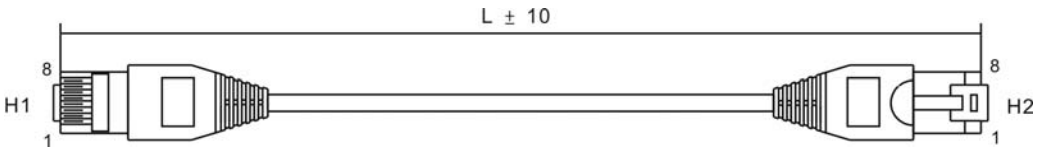

Title	Part No.	L	
		mm	inch
1	UC-CMC003-01A	300	11.8
2	UC-CMC005-01A	500	19.6
3	UC-CMC010-01A	1000	39
4	UC-CMC015-01A	1500	59
5	UC-CMC020-01A	2000	78.7
6	UC-CMC030-01A	3000	118.1
7	UC-CMC050-01A	5000	196.8
8	UC-CMC100-01A	10000	393.7
9	UC-CMC200-01A	20000	787.4

■ **CANopen Dimension**

Model：TAP-CN03

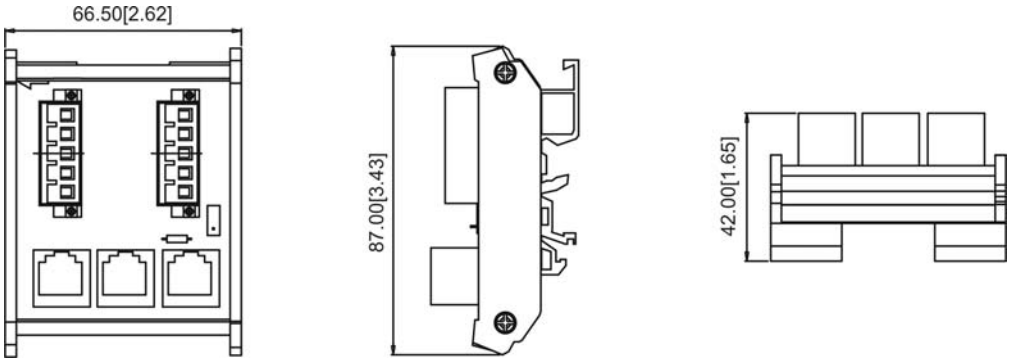

NOTE

For more information on CANopen, please refer to CANopen user manual or download related manuals on Delta website: http://www.delta.com.tw/industrialautomation/.

8-7 EMM-BPS01 Back-up Power Supply option card

■ Features

1. External 24V DC input via this card
2. To keep the control board alive for parameter read/write, status monitoring and communication.

■ Product Profile

1. Screw fixing hole
2. Positioning hole
3. AC motor drive connection port
4. +24V Terminal block

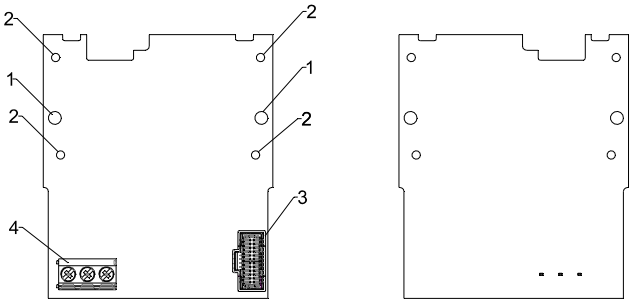

Wire: 24~20 AWG

Torque: 5 kg-cm / [4.3 lb-in.] / [0.49 Nm]

■ Specifications

When the drive is only powered by EMC-BPS01, communication stays normal, including support of all communication cards and the following functions: ■ Parameters can be read and written ■ Display with keypad ■ Keypad buttons (except the RUN button) ■ Analog input can operate ■ Multifunction inputs (FWD, RV, MI 1~MI 8) need external power supply to operate
The following functions are not supported: ■ Relay output ■ PLC function

Chapter 9 Specification

9-1 115V Series

9-2 230V Series

9-3 460V Series

9-4 Environment for Operation, Storage and Transportation

9-5 Derating of Ambient Temperature and Altitude

9-1 115V Series

115V series_1-phase (no built-in filter)

Model VFD_ _ _ _ _ _ _ _ _			**ANSAA ENSAA**	**1A6MS11**	**2A5MS11**	**4A8MS11**
Applicable Motor Output (kW)				0.2	0.4	0.75
Applicable Motor Output (hp)				0.25	0.5	1
Output	Heavy duty	Rated Output Capacity (kVA)		0.6	1.0	1.8
		Rated Output Current (A)		1.6	2.5	4.8
		Carrier Frequency (kHz)		2~15 (default 4)		
	Normal duty	Rated Output Capacity (kVA)		0.7	1.0	2.1
		Rated Output Current (A)		1.8	2.7	5.5
		Carrier Frequency (kHz)		2~15 (default 4)		
Input	Rated Input Current (A)	Heavy Duty		6.0	9.4	18
		Normal Duty		6.8	10.1	20.6
	Rated Voltage / Frequency			1-phase AC 100V~120VAC (-15% ~ +10%) / 50/60Hz		
	Mains Input Voltage Range (VAC)			85~132		
	Mains Frequency Range (Hz)			47~63		
Frame size				A1	A3	C1
Weight (kg)				0.65	0.74	1.24
Cooling Method				Natural cooling without fan kit		Fan cooling with fan kit
EMC Filter				Optional		
IP Rating				VFD_ _ _ _ _ _ _ _ **A**NSAA : IP20 VFD_ _ _ _ _ _ _ _ **E**NSAA : IP40*		

NOTE

- IP40*: The IP rating of wiring area (main circuit terminals and control terminals, frame A/B/C/D/E/F) and the vent near capacitor (frame C/D/E/F) is IP20.
- The value of the carrier frequency is a factory setting. To increase the carrier frequency, the current needs to be decreased. See derating curve diagram of Pr. 06-55 for more information.
- When a load is a shock or impact load, use a higher level model.

9-2 230V Series

230V series_1-phase without built-in filter

Model VFD_ _ _ _ _ _ _ _			**ANSAA ENSAA**	**1A6MS21**	**2A8MS21**	**4A8MS21**	**7A5MS21**	**11AMS21**
Applicable Motor Output (kW)				0.2	0.4	0.75	1.5	2.2
Applicable Motor Output (hp)				0.25	0.5	1	2	3
Output	Heavy duty	Rated Output Capacity (kVA)		0.6	1.1	1.8	2.9	4.2
		Rated Output Current (A)		1.6	2.8	4.8	7.5	11
		Carrier Frequency (kHz)		2~15 (default 4)				
	Normal duty	Rate Output Capacity (kVA)		0.7	1.2	1.9	3.2	4.8
		Rated Output Current (A)		1.8	3.2	5	8.5	12.5
		Carrier Frequency (kHz)		2~15 (default 4)				
Input	Rated Input Current (A)	Heavy Duty		3.4	5.9	10.1	15.8	23.1
		Normal Duty		3.8	6.7	10.5	17.9	26.35
	Rated Voltage / Frequency			1-phase AC 200V~240VAC (-15% ~ +10%) / 50/60Hz				
	Mains Input Voltage Range (VAC)			170~264				
	Mains Frequency Range (Hz)			47~63				
Frame				A1	A3	B2	C1	
AC Drive Weight				0.65 kg	0.76 kg	0.95 kg	1.24 kg	
Cooling Method				Natural cooling without fan kit			Fan cooling with fan kit	
EMC Filter				Optional				
IP Rating				VFD_ _ _ _ _ _ _ _ _**A**NSAA : IP20 VFD_ _ _ _ _ _ _ _ _**E**NSAA : IP40*				

230V series_1-phase with built-in filter

Model VFD_ _ _ _ _ _ _ _			**AFSAA**	**1A6MS21**	**2A8MS21**	**4A8MS21**	**7A5MS21**	**11AMS21**
Applicable Motor Output (kW)				0.2	0.4	0.75	1.5	2.2
Applicable Motor Output (hp)				0.25	0.5	1	2	3
Output	Heavy duty	Rated Output Capacity (kVA)		0.6	1.1	1.8	2.9	4.2
		Rated Output Current (A)		1.6	2.8	4.8	7.5	11
		Carrier Frequency (kHz)		2~15 (default 4)				
	Normal duty	Rate Output Capacity (kVA)		0.7	1.2	1.9	3.2	4.8
		Rated Output Current (A)		1.8	3.2	5	8.5	12.5
		Carrier Frequency (kHz)		2~15 (default 4)				
Input	Rated Input Current (A)	Heavy Duty		3.4	5.9	10.1	15.8	23.1
		Normal Duty		3.8	6.7	10.5	17.9	26.35
	Rated Voltage / Frequency			1-phase AC 200V~240VAC (-15% ~ +10%) / 50/60Hz				
	Mains Input Voltage Range (VAC)			170~264				
	Mains Frequency Range (Hz)			47~63				
Frame				B3			C2	
AC Drive Weight (kg)				1.32 kg			1.8kg	
Cooling Method				Natural cooling without fan kit	Fan cooling with fan kit			
EMC Filter				Built-in				
IP Rating				IP20				

NOTE

- IP40*: The IP rating of wiring area (main circuit terminals and control terminals, frame A/B/C/D/E/F) and the vent near capacitor (frame C/D/E/F) is IP20.
- The value of the carrier frequency is a factory setting. To increase the carrier frequency, the current needs to be decreased. See derating curve diagram of Pr. 06-55 for more information.
- When a load is a shock or impact load, use a higher level model.

230V series_3-phase (no built-in filter)

Model VFD_ _ _ _ _ _ _ _			**ANSAA ENSAA**	**1A6MS23**	**2A8MS23**	**4A8MS23**	**7A5MS23**	**11AMS23**
Applicable Motor Output (kW)				0.2	0.4	0.75	1.5	2.2
Applicable Motor Output (hp)				0.25	0.5	1	2	3
Output	Heavy duty	Rated Output Capacity (kVA)		0.6	1.1	1.8	2.9	4.2
		Rated Output Current (A)		1.6	2.8	4.8	7.5	11
		Carrier Frequency (kHz)		2~15 (default 4)				
	Normal duty	Rate Output Capacity (kVA)		0.7	1.2	1.9	3.2	4.8
		Rated Output Current (A)		1.8	3.2	5	8.5	12.5
		Carrier Frequency (kHz)		2~15 (default 4)				
Input	Rated Input Current (A)	Heavy Duty		1.9	3.4	5.8	9	13.2
		Normal Duty		2.	3.8	6	9.6	15
	Rated Voltage / Frequency			3-phase AC 200V~240VAC (-15% ~ +10%) / 50/60Hz				
	Mains Input Voltage Range (VAC)			170~264				
	Mains Frequency Range (Hz)			47~63				
Frame				A1	A2	A5	B1	C1
AC Drive Weight (kg)				0.65 kg	0.68 kg	0.81 kg	1.05 kg	1.24
Cooling Method				Natural cooling without fan kit			Fan cooling with fan kit	
EMC Filter				Optional				
IP Rating				VFD_ _ _ _ _ _ _ _ **A**NSAA : IP20 VFD_ _ _ _ _ _ _ _ **E**NSAA : IP40*				

230V series_3-phase (no built-in filter)

Model VFD_ _ _ _ _ _ _ _			**ANSAA ENSAA**	**17AMS23**	**25AMS23**	**33AMS23**	**49AMS23**	**65AMS23**
Applicable Motor Output (kW)				3.7	5.5	7.5	11	15
Applicable Motor Output (hp)				5	7.5	10	15.2	20
Output	Heavy duty	Rated Output Capacity (kVA)		6.5	9.5	12.6	18.7	24.8
		Rated Output Current (A)		17	25	33	49	65
		Carrier Frequency (kHz)		2~15 (default 4)				
	Normal duty	Rate Output Capacity (kVA)		7.4	10.3	13.7	19.4	26.3
		Rated Output Current (A)		19.5	27	36	51	69
		Carrier Frequency (kHz)		2~15 (default 4)				
Input	Rated Input Current (A)	Heavy Duty		20.4	30	39.6	58.8	78
		Normal Duty		23.4.	32.4	43.2	61.2	82.8
	Rated Voltage / Frequency			3-phase AC 200V~240VAC (-15% ~ +10%) / 50/60Hz				
	Mains Input Voltage Range (VAC)			170~264				
	Mains Frequency Range (Hz)			47~63				
Frame				C1	D1	E1		F1
AC Drive Weight (kg)				1.24	2.07	3.97		6.25
Cooling Method				Fan cooling with fan kit				
EMC Filter				Optional				
IP Rating				VFD_ _ _ _ _ _ _ _ **A**NSAA : IP20 VFD_ _ _ _ _ _ _ _ **E**NSAA : IP40*				

NOTE

- IP40*: The IP rating of wiring area (main circuit terminals and control terminals, frame A/B/C/D/E/F) and the vent near capacitor (frame C/D/E/F) is IP20.
- The value of the carrier frequency is a factory setting. To increase the carrier frequency, the current needs to be decreased. See derating curve diagram of Pr. 06-55 for more information.
- When a load is a shock or impact load, use a higher level model.

9-3 460V Series

460V series_3-phase without built-in filter

Model VFD_ _ _ _ _ _ _ _			**ANSAA ENSAA**	**1A5MS43**	**2A7MS43**	**4A2MS43**	**5A5MS43**	**9A0MS43**
Applicable Motor Output (kW)				0.4	0.75	1.5	2.2	3.7
Applicable Motor Output (hp)				0.5	1	2	3	5
Output	Heavy duty	Rated Output Capacity (kVA)		1.1	2.1	3.2	4.2	6.9
		Rated Output Current (A)		1.5	2.7	4.2	5.5	9
		Carrier Frequency (kHz)		2~15 (default 4)				
	Normal duty	Rate Output Capacity (kVA)		1.4	2.3	3.5	5	8
		Rated Output Current (A)		1.8	3	4.6	6.5	10.5
		Carrier Frequency (kHz)		2~15 (default 4)				
Input	Rated Input Current (A)	Heavy Duty		2.1	3.7	5.8	6.1	9.9
		Normal Duty		2.5	4.2	6.4	7.2	11.6
	Rated Voltage / Frequency			3-phase AC 380V~480VAC (-15% ~ +10%) / 50/60Hz				
	Mains Input Voltage Range (VAC)			342~528				
	Mains Frequency Range (Hz)			47~63				
Frame				A4	A5	B1	C1	
AC Drive Weight (kg)				0.76	0.81	1.05	1.24	
Cooling Method				Natural cooling without fan kit		Fan cooling with fan kit		
EMC Filter				Optional				
IP Rating				VFD_ _ _ _ _ _ _ _ _**A**NSAA : IP20 VFD_ _ _ _ _ _ _ _ _**E**NSAA : IP40*				

460V series_3-phase with built-in filter

Model VFD_ _ _ _ _ _ _ _			**AFSAA**	**1A5MS43**	**2A7MS43**	**4A2MS43**	**5A5MS43**	**9A0MS43**
Applicable Motor Output (kW)				0.4	0.75	1.5	2.2	3.7
Applicable Motor Output (hp)				0.5	1	2	3	5
Output	Heavy duty	Rated Output Capacity (kVA)		1.1	2.1	3.2	4.2	6.9
		Rated Output Current (A)		1.5	2.7	4.2	5.5	9
		Carrier Frequency (kHz)		2~15 (default 4)				
	Normal duty	Rate Output Capacity (kVA)		1.4	2.3	3.5	5	8
		Rated Output Current (A)		1.8	3	4.6	6.5	10.5
		Carrier Frequency (kHz)		2~15 (default 4)				
Input	Rated Input Current (A)	Heavy Duty		2.1	3.7	5.8	6.1	9.9
		Normal Duty		2.5	4.2	6.4	7.2	11.6
	Rated Voltage / Frequency			3-phase AC 380V~480VAC (-15% ~ +10%) / 50/60Hz				
	Mains Input Voltage Range (VAC)			342~528				
	Mains Frequency Range (Hz)			47~63				
Frame				B3			C2	
AC Drive Weight (kg)				1.32			1.80	
Cooling Method				Fan cooling with fan kit				
EMC Filter				Built-in				
IP Rating				IP20				

NOTE

- IP40*: The IP rating of wiring area (main circuit terminals and control terminals, frame A/B/C/D/E/F) and the vent near capacitor (frame C/D/E/F) is IP20.
- The value of the carrier frequency is a factory setting. To increase the carrier frequency, the current needs to be decreased. See derating curve diagram of Pr. 06-55 for more information.
- When a load is a shock or impact load, use a higher level model.

460V series_3-phase without built-in filter

Model VFD_ _ _ _ _ _ _ _			**ANSAA ENSAA**	**13AMS43**	**17AMS43**	**25AMS43**	**32AMS43**	**38AMS43**	**45AMS43**
Applicable Motor Output (kW)				5.5	7.5	11	15	18.5	22
Applicable Motor Output (hp)				7.5	10	15	20	25	30
Output	Heavy duty	Rated Output Capacity (kVA)		9.9	13	19.1	24.4	29	34.3
		Rated Output Current (A)		13	17	25	32	38	45
		Carrier Frequency (kHz)		2~15 (default 4)					
	Normal duty	Rate Output Capacity (kVA)		12	15.6	21.3	27.4	31.6	37.3
		Rated Output Current (A)		15.7	20.5	28	36	41.5	49
		Carrier Frequency (kHz)		2~15 (default 4)					
Input	Rated Input Current (A)	Heavy Duty		14.3	18.7	27.5	35.2	41.8	49.5
		Normal Duty		17.3	22.6	30.8	39.6	45.7	53.9
	Rated Voltage / Frequency			3-phase AC 380V~480VAC (-15% ~ +10%) / 50/60Hz					
	Mains Input Voltage Range (VAC)			342~528					
	Mains Frequency Range (Hz)			47~63					
Frame				D1		E1		F1	
AC Drive Weight (kg)				2.91		5.15		8.50	
Cooling Method				Fan cooling with fan kit					
EMC Filter				Optional					
IP Rating				VFD_ _ _ _ _ _ _ _**A**NSAA : IP20 VFD_ _ _ _ _ _ _ _**E**NSAA : IP40*					

460V series_3-phase with built-in filter

Model VFD_ _ _ _ _ _ _ _			**AFSAA**	**13AMS43**	**17AMS43**	**25AMS43**	**32AMS43**	**38AMS43**	**45AMS43**
Applicable Motor Output (kW)				5.5	7.5	11	15	18.5	22
Applicable Motor Output (hp)				7.5	10	15	20	25	30
Output	Heavy duty	Rated Output Capacity (kVA)		9.9	13	19.1	24.4	29	34.3
		Rated Output Current (A)		13	17	25	32	38	45
		Carrier Frequency (kHz)		2~15 (default 4)					
	Normal duty	Rate Output Capacity (kVA)		12	15.6	21.3	27.4	31.6	37.3
		Rated Output Current (A)		15.7	20.5	28	36	41.5	49
		Carrier Frequency (kHz)		2~15 (default 4)					
Input	Rated Input Current (A)	Heavy Duty		14.3	18.7	27.5	35.2	41.8	49.5
		Normal Duty		17.3	22.6	30.8	39.6	45.7	53.9
	Rated Voltage / Frequency			3-phase AC 380V~480VAC (-15% ~ +10%) / 50/60Hz					
	Mains Input Voltage Range (VAC)			342~528					
	Mains Frequency Range (Hz)			47~63					
Frame				D2		E2		F2	
AC Drive Weight (kg)				2.07		3.97		6.25	
Cooling Method				Fan cooling with fan kit					
EMC Filter				Built-in					
IP Rating				IP20					

NOTE

- IP40*: The IP rating of wiring area (main circuit terminals and control terminals, frame A/B/C/D/E/F) and the vent near capacitor (frame C/D/E/F) is IP20.
- The value of the carrier frequency is a factory setting. To increase the carrier frequency, the current needs to be decreased. See derating curve diagram of Pr. 06-55 for more information.
- When a load is a shock or impact load, use a higher level model.

General Specifications

Control Characteristics	Control Method	V/F、SVC
	Applied Motor	IM (Induction Motor), Simple PM motor control (IPM and SPM)
	Starting Torque **[Note 1]**	150% / 3 Hz (V/f, SVC control for IM · Heavy duty) 100% / (1/20 of motor rated frequency) (SVC control for PM · Heavy duty)
	Speed Control Range **[Note 1]**	1 : 50 (V/f, SVC control for IM · Heavy duty) 1 : 20 (SVC control for PM · Heavy duty)
	Max. Output Frequency	0.00~599.00Hz
	Overload Capability	Normal duty: 120% 60s, 150% 3s Heavy duty: 150% 60s, 200% 3s
	Frequency Setting Signal	0~+10V / +10V~-10V 4~20 mA / 0~+10V 1 channel pulse input (33kHz), 1 channel pulse output (33 KHz)
	Main Function	Multi-motor switching (up to 4 independent motor parameters), Fast Run, DEB function, Wobble frequency function, Rapid deceleration function, Main and auxiliary frequency function, Momentary power loss ride thru, Speed search, Over-torque detection, 16-step speed (including main speed), Accel/decel time switch, S-curve accel/decal, 3-wire sequence, JOG frequency, Frequency upper/lower limit settings, DC injection braking at start/stop, PID control, Built-in PLC (2000 steps), Simple positioning function
	Application Macro	Built-in application parameter groups(selected by industry) and user-defined application parameter groups.
Protection Characteristics	Motor Protection	Over-current, Over-voltage, Over-temperature, Phase loss
	Stall Prevention	Stall prevention during acceleration, deceleration and running (independent settings)
Accessory	Communication Cards	DeviceNet 、Ethernet/IP、Profibus DP、Modbus TCP、CANopen
	External DC Power Supply	EMM-BPS01 (DC 24V power supply card)
Certifications		UL, CE, C-Tick, TÜV (SIL 2), RoHS, REACH

[Note 1] Control accuracy may vary depending on the environment, application conditions, different motors or encoder. For details, please contact our company or your local distributor.

9-4 Environment for Operation, Storage and Transportation

DO NOT expose the AC Motor Drive in the bad environment, such as dust, direct sunlight, corrosive/ inflammable gasses, humidity, liquid and vibration environment. The salt in the air must be less than 0.01 mg/cm^2 every year.				
Environment	Installation location	IEC 60364-1/ IEC 60664-1 Pollution degree 2, Indoor use only		
	Surrounding Temperature	Operation	IP20/UL Open Type	-20 ~ +50 °C -20 ~ +60 °C with derating
			IP40/NEMA 1/UL Type 1	-20 ~ +40 °C
			Installed side by side	-20 ~ +50 °C with derating
		Storage	-40 ~ +85°C	
		Transportation	-20 ~ +70°C	
		No condensation, non-frozen		
	Relative Humidity	Operation	Max. 90%	
		Storage/ Transportation	Max. 95%	
		No condense water		
	Air Pressure	Operation	86 ~ 106 kPa	
		Storage/ Transportation	70 ~ 106 kPa	
	Pollution Level	IEC 60721-3		
		Operation	Class 3C2; Class 3S2	
		Storage	Class 2C2; Class 2S2	
		Transportation	Class 1C2; Class 1S2	
		Concentrate prohibited		
	Altitude	<1000m (>1000m with derating)		
Package Drop	Storage	ISTA procedure 1A (according to weight) IEC 60068-2-31		
	Transportation			
Vibration	Operating	IEC60068-2-6: 2Hz~13.2Hz: 1mm, peak-peak 13.2Hz~55Hz: 0.7G~2.0G 55Hz~512Hz: 2.0G		
	Non-operating	2.5G peak 5Hz~2kHz: 0.015" max. displacement		
Impact	Operating	IEC/EN60068-2-27: 15G, 11ms		
	Non-operating	30G		

9-5 Derating of Ambient Temperature and Altitude

- **Derating of Ambient Temperature**

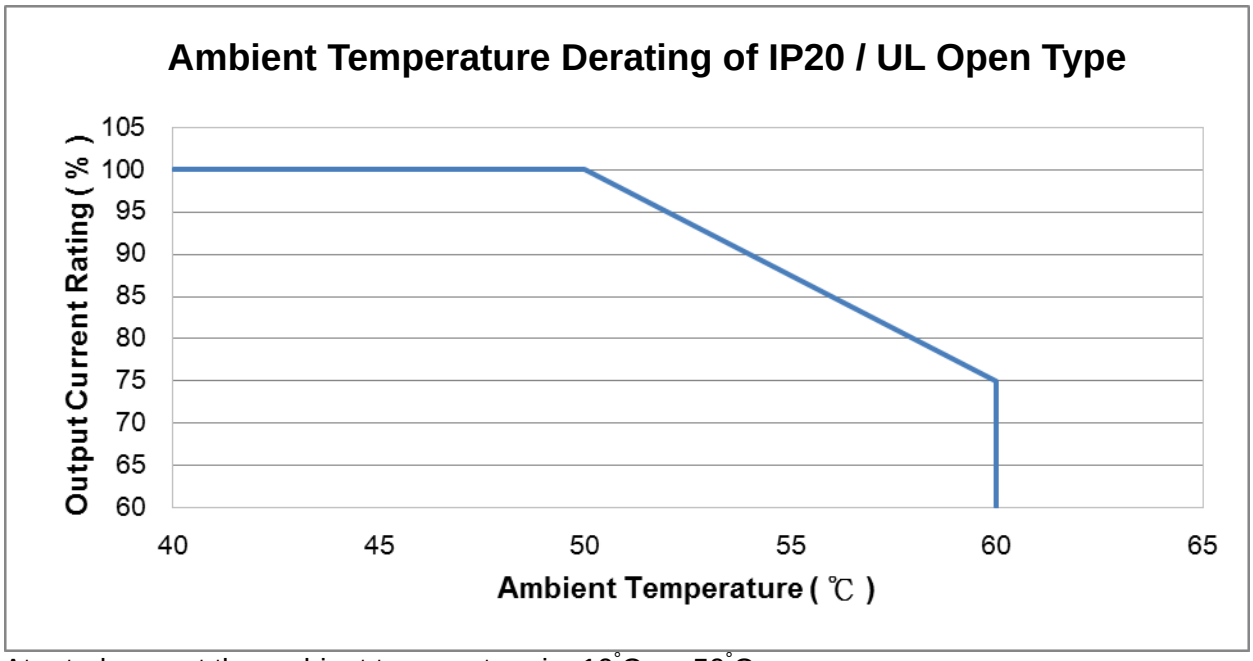

At rated current the ambient temperature is -10°C ~ +50°C.
Over 50°C the rated current has to be decreased 2.5%/°C up to 60°C.

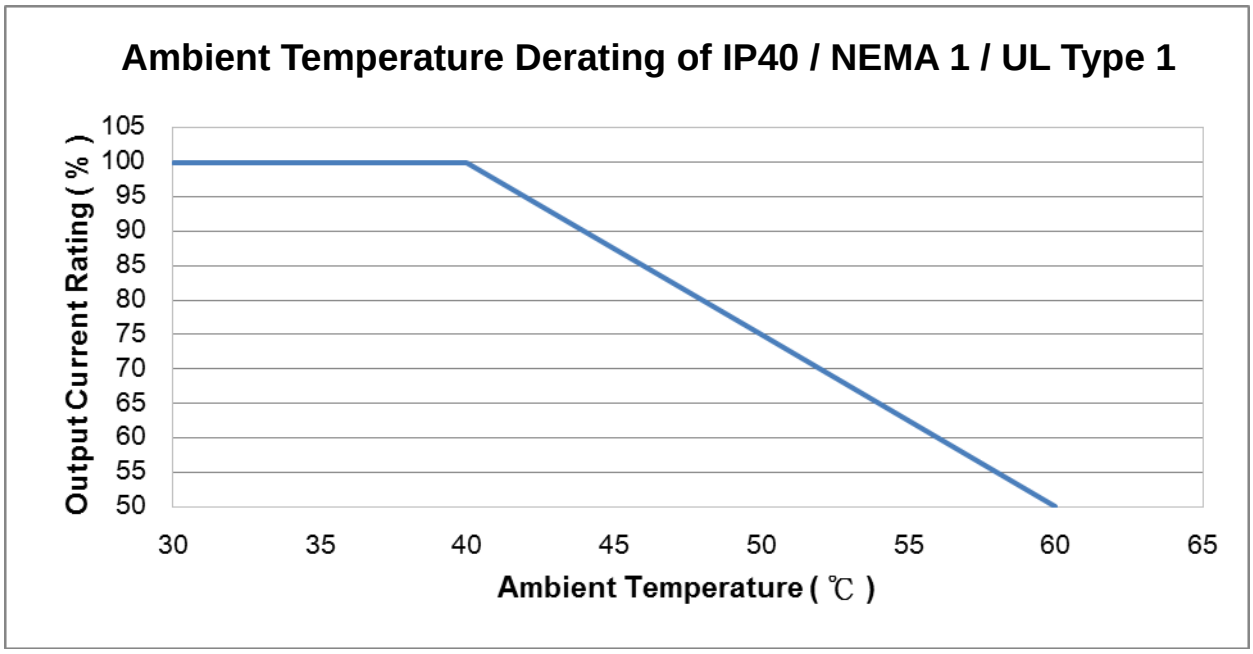

At rated current the ambient temperature is -10°C ~ +40°C.
Over 40°C the rated current has to be decreased 2.5%/°C up to 60°C.

- **Derating of Altitude**

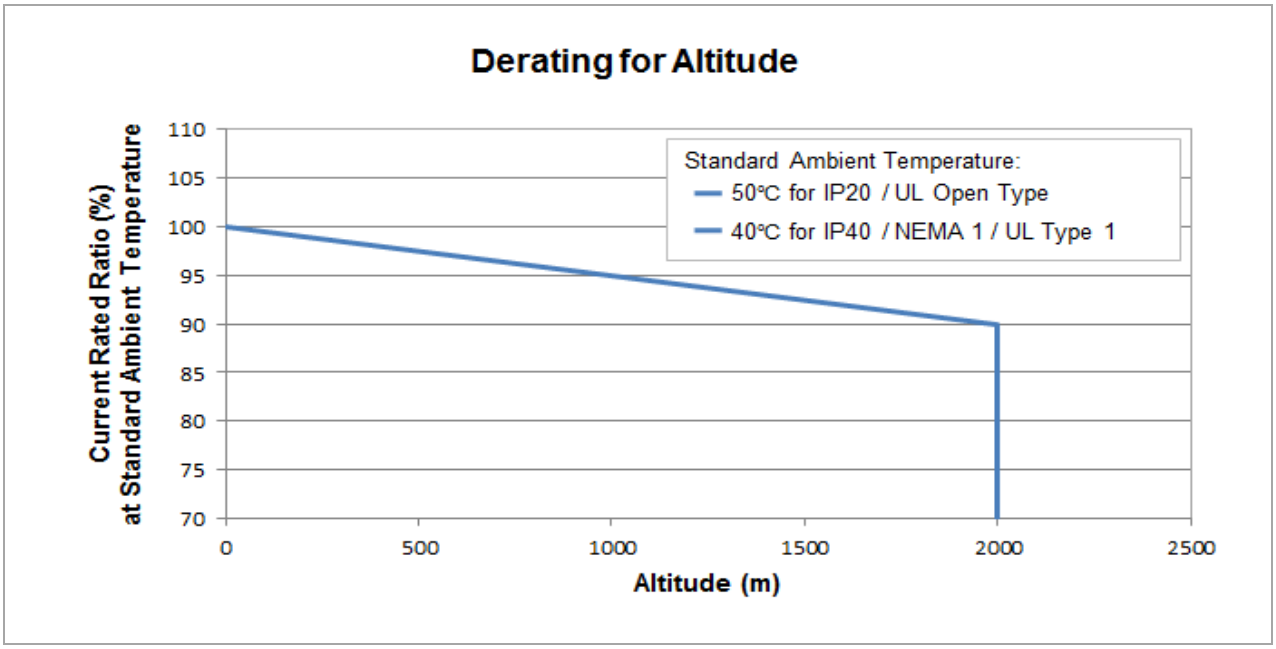

For IP20 / UL Open Type

Current derating at ambient temperature				
Ambient temperature		40 °C	45 °C	50 °C
Operating altitude above sea level (m)	0-1000	100%		
	1001-1500	100%		95%
	1501-2000	100%	95%	90%

For IP40 / NEMA1 / UL Type 1

Current derating at ambient temperature				
Ambient temperature		30 °C	35 °C	40 °C
Operating altitude above sea level (m)	0-1000	100%		
	1001-1500	100%		95%
	1501-2000	100%	95%	90%

Operating Conditions	**Ambient Temperature Limits**
IP20 / UL Open Type	When the AC motor drive is operating at the rated current, the ambient temperature has to be between -20 °C ~ +50 °C. When the temperature is over 50 °C, for every increase by 1 °C, decrease 2.5 % of the rated current. The maximum allowable temperature is 60 °C.
For IP40 / NEMA1 / UL Type 1	When the AC motor drive is operating at the rated current, the ambient temperature has to be between -20 °C ~ +40 °C. When the temperature is over 40 °C, for every increase by 1 °C, decrease 2.5 % of the rated current. The maximum allowable temperature is 60 °C.
High Altitude	If the AC motor drive is installed at altitude 0~1000 m, follow normal operation restriction. If it is installed at altitude 1000~2000 m, decrease 1 % of rated current or lower 0.5 °C of temperature for every 100 m increase in altitude. Maximum altitude for Corner Grounded is 2000 m. Contact Delta for more information if you need to use this motor drive at an altitude of 2000 m or higher.

[This page intentionally left blank]

Chapter 10 Digital Keypad

Appearance of KPMS-LE01 keyboard panel

❶ Status Display Area
Respectively displays the operation status of the drive, Operate, Stop, PLC, Forward, Reverse etc.

❷ Main Display Area
Display Frequency, Current, Voltage, Steering, User-defined Units, Abnormality etc.

❸ Frequency Setting Knob (Potentiometer)
This knob can be set as main frequency input

❹ UP Key
It is used to change the set value and parameters

❺ LEFT/ DOWN Key
It is used to change the set value and parameters (use left key by long pressing MODE key)

Descriptions of Keypad Functions

Displayed items	Descriptions
RUN FWD REV F60.00 STOP PLC	Display present frequency command of the drive
RUN FWD REV H50.00 STOP PLC	Display actual output frequency to the motor
RUN FWD REV U 180 STOP PLC	Display user-defined output of physical quantity Example for parameter 00-04 = 30 (User Defined output)
RUN FWD REV A 5.00 STOP PLC	Display output current
RUN FWD REV Frd STOP PLC	Forward command
RUN FWD REV rEv STOP PLC	Reverse command
RUN FWD REV c 20 STOP PLC	Display counter value
RUN FWD REV 06.00 STOP PLC	Display parameter

Displayed items	Descriptions
RUN FWD REV 10 STOP PLC	Display parameter value
RUN FWD REV EF STOP PLC	Display external fault
RUN FWD REV End STOP PLC	Display the data has been accepted and automatically stored in the internal memory
RUN FWD REV Err STOP PLC	Display when the set data is not accepted or the value exceeded

Keypad operation process

A. Main Page Selection

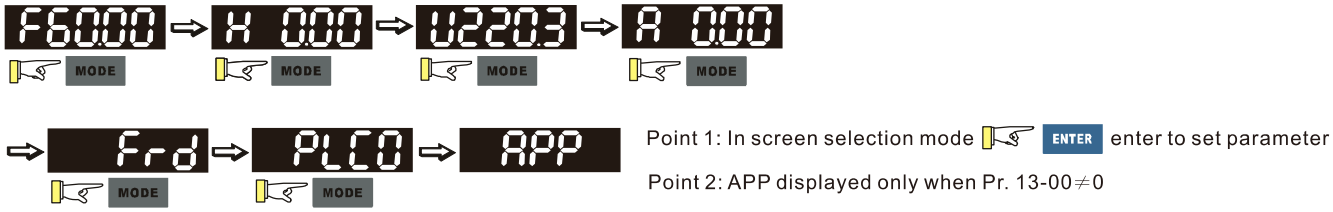

Setting parameters

Note: In the parameter setting mode, you can press ENTER to return the selecting mode.

To shift data

Setting direction

(When operation source is digital keypad)

PLC Setting

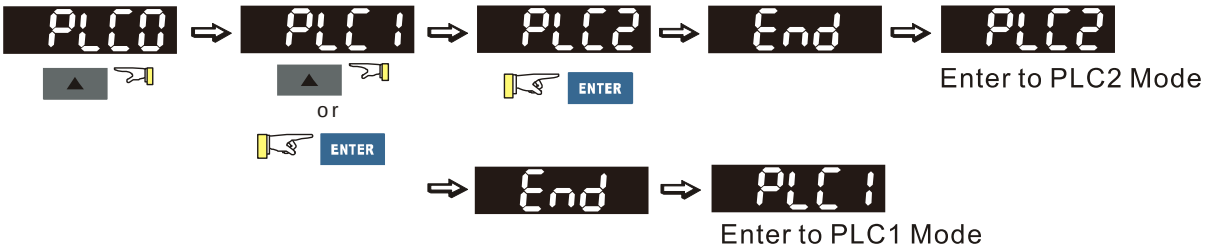

B. F page (Frequency command setting page)

General Mode 1 (maximum operating frequency 01-00 is double digits, e.g.: Pr. 01-00=60.00 Hz)

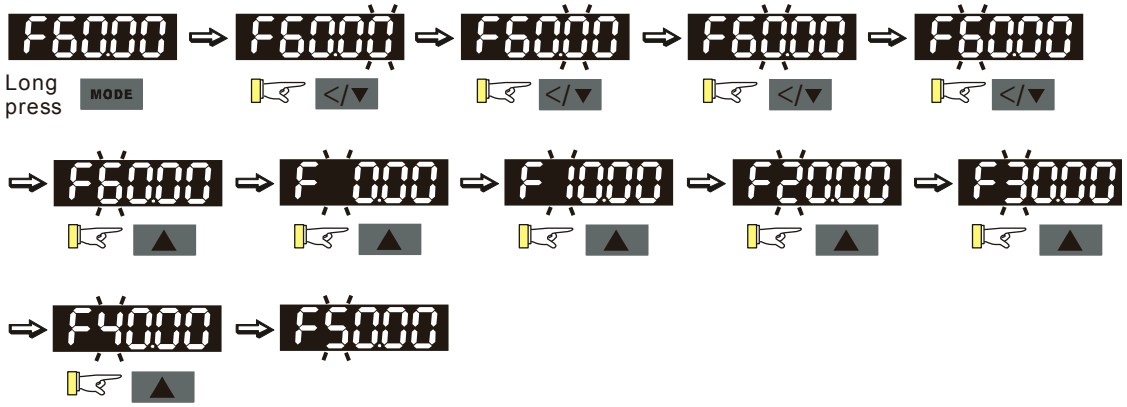

General Mode 2 (maximum operating frequency 01-00 is three digits, e.g.: Pr. 01-00=599.0 Hz)

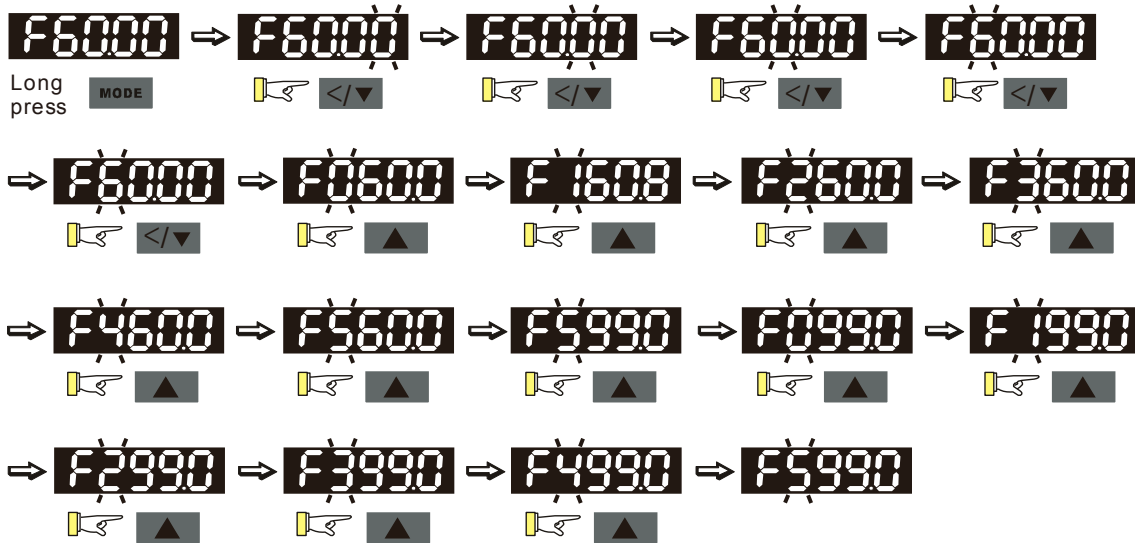

C. Application Selection Page

Application selection page will display APP, but it will not show the APP page when Pr.13-00=0

The description of Pr. 13-00 setting is as follow:

Pr. 13-00=0

Application selection will be inactivated and will not be shown on display

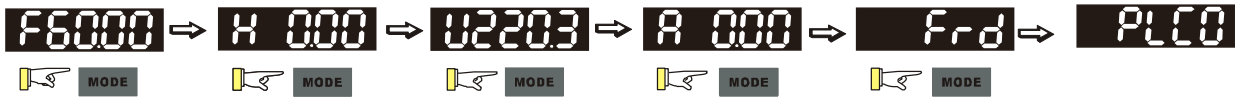

Pr. 13-00=1 is User Defined application, keypad will display USEr

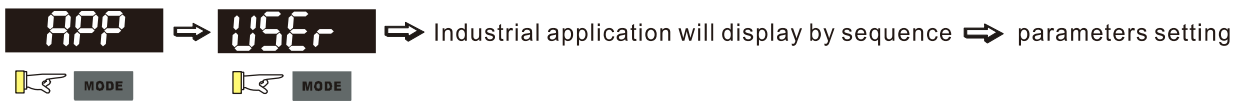

Pr. 13-00=2 is Compressor application, keypad will display CoPr

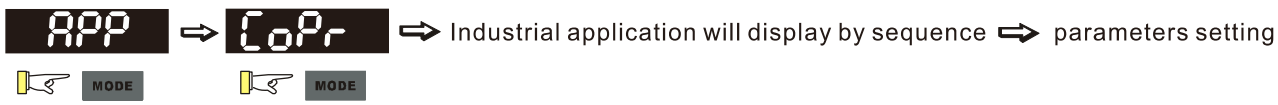

Pr. 13-00=3 is Fan application, keypad will display FAn

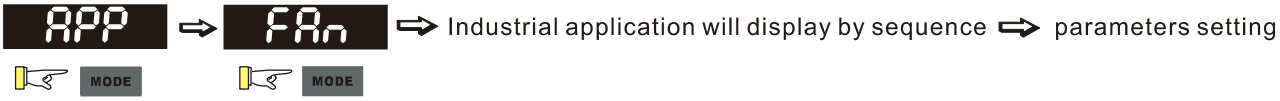

Pr. 13-00=4 is Pump application, keypad will display PUMP

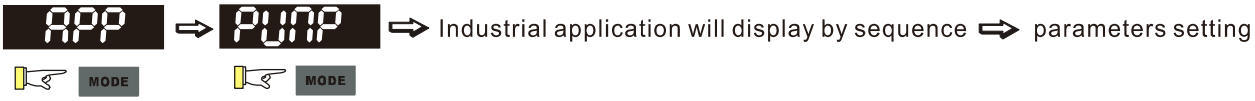

Pr. 13-00=5 is Conveyor application, keypad will display CnYr

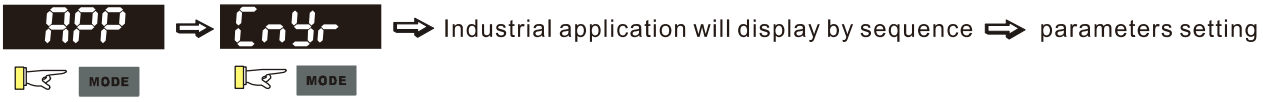

Pr. 13-00=6 is Machine tool, keypad will display CnC

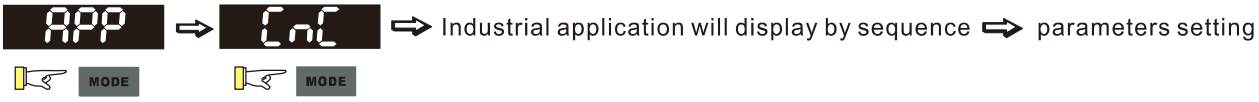

Pr. 13-00=7 is Packing application, keypad will display PAC

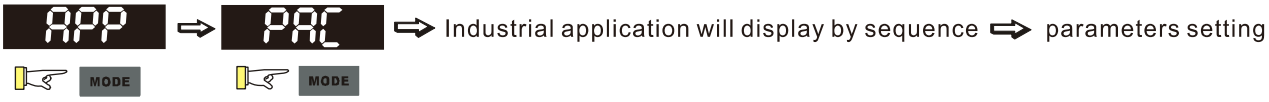

Pr. 13-00=8 is Textiles application, keypad will display tiLE

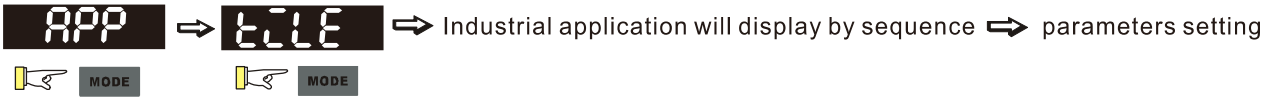

When Pr. 13-00≠0, the corresponding parameters will be shown in the APP page according to the setting of Pr. 13-00. Then in each selected application, user can view the parameters by pressing Enter button. (If Pr.13-00=1 and no parameters are set in Pr.13-01~13-50, the user can not enter USEr page.) The parameter setting in APP is the same as for other parameters groups: use up and left/down key to set the parameter value.

Please follow the setting process below to set the User Defined application selection (Pr.13-00=1):

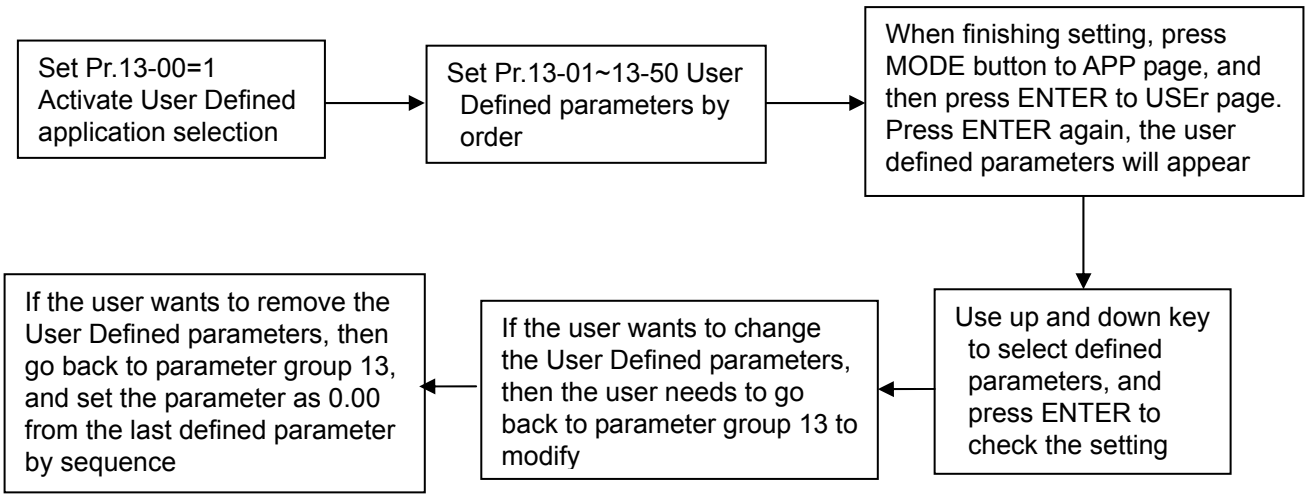

1. The application selection can be activated by setting Pr. 13-00≠0.
2. After setting Pr. 13-00=1, the user can give the definition of 13-01~50 by their requirement.
3. The default setting of Pr. 13-01~50 is P 0.00. Press Enter to set the corresponding parameters to Pr. 13-01~50 by sequence.
4. The way of setting corresponding parameters in Pr. 13-01~50 is the same as in other parameter groups: use up down and left key to set the parameters value
   Note 1: Read-only parameters cannot be set
   Note 2: Pr. 13-01, 02……50 need to be set by sequence, or the display will show Err
5. If the set corresponding parameters need to be changed, the user needs to go back to Pr. 13-01~50 to modify.
6. If user wants to remove the set parameters, then the last parameter needs to be removed (set as 0.00) first, or the display will show Err
   For example, if there are 5 user defined parameters (Pr. 13-01, 13-02…13-05), then to remove Pr. 13-02, Pr. 13-05, 04, 03 need to be removed by first in sequence
7. When finishing setting, press MODE back to APP page and ENTER again, the Keypad will display USEr, after ENTER again, the set corresponded parameters will appear

Please follow the setting process below to select specific application setting (Pr. 13-00=2~8)

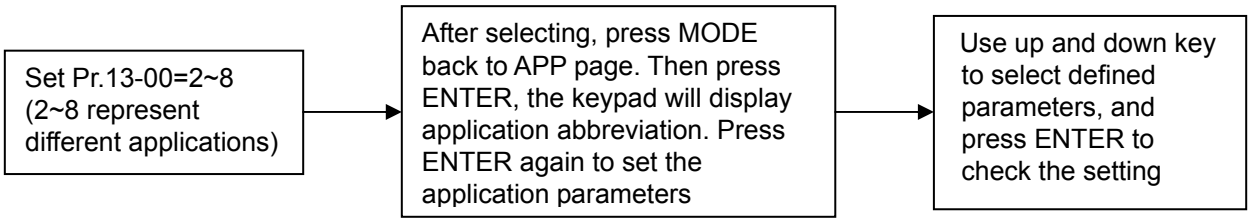

D. Parameter setting

How to enablele/disable left shift key function?

- Enable left shift key function: Press MODE for >2s. Last digit will start to blink.
- Disable left shift key function: Press MODE for >2s. Last digit stops blinking.

The left shift key function works only for changing parameters, not when going to a different parameter.

D-1. Unsigned parameter

(parameter setting range≧0, e.g. Pr. 01-00)

1. Left shift key function disabled: Press UP or LEFT/DOWN key to adjust the value.
2. Left shift key function enabled: Last digit blinks. Press UP key to increase the value of this digit. Back to 0 after 9
3. Press LEFT/DOWN key, the blinking digit will shift left one digit
4. After the parameter is set, the left shift key function will not be disabled automatically. It has to be disabled by the user

E.g.: The default setting of Pr. 01-00 is 60.00. After pressing MODE key for >2 seconds to enable the left shift function, pressing LEFT/DOWN key will be as shown below:

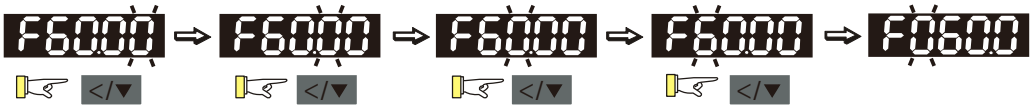

The upper setting limit of Pr. 01-00 is 599.00. If a value >599.00 is set, the display will show [Err] after ENTER, and then the display shows the upper limit [599.00] for a second to remind user of exceeding the maximum setting. Then the original value will kept unchanged. The cursor will return to the last digit.

D-2. Signed parameter setting status 1
(parameter setting range has no or one decimal place, e.g. Pr. 03-03)

1. Left shift key function disabled: Press UP or LEFT/DOWN key to adjust the value
2. Left shift key function enabled: Last digit blinks. Press UP key to increase the value of this digit. Back to 0 after 9
3. Press LEFT/DOWN key, the blinking digit will shift left one digit. When shifting to the first digit and pressing the UP key, the digit “0” will change to “minus”
4. After the parameter is set, the left shift key function will not be disabled automatically. It has to be disabled by the user

E.g.: The default setting of Pr. 03-03 is 0.0. After pressing MODE key for >2 seconds to enable the left shift function, pressing LEFT/DOWN key will be as shown below:

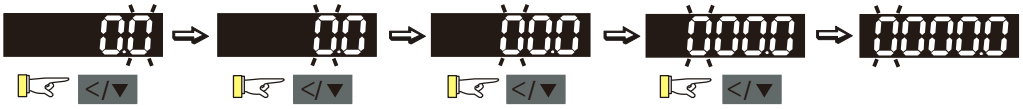

The upper setting limit of Pr.03-03 is 100.0 and the lower limit is -100.0. If a value >100.0 or <-100.0 is set, the display will show [Err] after ENTER, and then the display will show the upper limit [100.0] or lower limit [-100.0] for a second to remind user of exceeding the upper or lower limit. Then the original value will kept unchanged. The cursor will return to the last digit.

D-3. Signed parameter setting status 2
(parameter setting range has two decimal places, e.g. Pr. 03-74)

1. Left shift key function disabled: Press UP or LEFT/DOWN key to adjust the value
2. Left shift key function enabled: Last digit blinks. Press UP key to increase the value of this digit. Back to 0 after 9
3. Press LEFT/DOWN key, the blinking digit will shift left one digit. When shifting to the first digit and pressing the UP key, the digit “0” will change to “minus”
4. For parameters in 2 decimals and a positive/negative setting range, values >99.99 or <-99.99 will be shown in 1 decimal, e.g. 100.0 or -100.0
5. After the parameter is set, the left shift key function will not be disabled automatically. It has to be disabled by the user

E.g.: The default setting of Pr. 03-74 is -100.0. After pressing MODE key for >2 seconds to enable the left shift function, pressing LEFT/DOWN key will be as shown below:

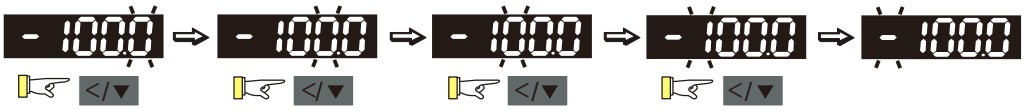

If the parameter is adjusted upwards, the display will show [-99.99].

The upper setting limit of Pr. 03-74 is 100.0 and lower limit is -100.0. If a value >100.0 or <-100.0 is set, the display will show [Err] after ENTER, and then the display will show the upper limit [100.0] or lower limit [-100.0] for a second to remind user of exceeding the upper or lower limit. Then the original value will kept unchanged. The cursor will return to the last digit.

Reference Table for the 7-segment LED Display of the Digital Keypad

Number	0	1	2	3	4	5	6	7	8	9
Display	0	1	2	3	4	5	6	7	8	9
Number	A	a	B	b	C	c	D	d	E	e
Display	A	-	-	b	C	c	-	d	E	-
Number	F	f	G	g	H	h	I	i	J	j
Display	F	-	G	-	H	h	-	i	J	j
Number	K	k	L	l	M	m	N	n	O	o
Display	K	-	L	-	-	-	-	n	-	o
Number	P	p	Q	q	R	r	S	s	T	t
Display	P	-	-	q	-	r	S	-	-	t
Number	U	u	V	v	W	w	X	x	Y	y
Display	U	u	-	v	-	-	-	-	Y	-
Number	Z	z								
Display	Z	-								

[This page intentionally left blank]

Chapter 11 Summary of Parameter Settings

This chapter provides summary of parameter settings for user to gather the parameter setting ranges, factory settings and set parameters. The parameters can be set, changed and reset by the digital keypad.

NOTE

⚡: The parameter can be set during operation

00 Drive Parameters

Pr.	Explanation	Settings	Factory Setting
00-00	Identity code of the AC motor drive	102: 110 V, 1 Phase, 0.25 HP 103: 110 V, 1 Phase, 0.5 HP 104: 110 V, 1 Phase, 1 HP 302: 230 V, 1 Phase, 0.25 HP 303: 230 V, 1 Phase, 0.5 HP 304: 230 V, 1 Phase, 1 HP 305: 230 V, 1 Phase, 2 HP 306: 230 V, 1 Phase, 3 HP 202: 230 V, 3 Phase, 0.25 HP 203: 230 V, 3 Phase, 0.5 HP 204: 230 V, 3 Phase, 1 HP 205: 230 V, 3 Phase, 2 HP 206: 230 V, 3 Phase, 3 HP 207: 230 V, 3 Phase, 5 HP 208: 230 V, 3 Phase, 7.5 HP 209: 230 V, 3 Phase, 10 HP 210: 230 V, 3 Phase, 15 HP 211: 230 V, 3 Phase, 20 HP 403: 460 V, 3 Phase, 0.5 HP 404: 460 V, 3 Phase, 1 HP 405: 460 V, 3 Phase, 2 HP 406: 460 V, 3 Phase, 3 HP 407: 460 V, 3 Phase, 5 HP 408: 460 V, 3 Phase, 7.5 HP 409: 460 V, 3 Phase, 10 HP 410: 460 V, 3 Phase, 15 HP 411: 460 V, 3 Phase, 20 HP 412: 460 V, 3 Phase, 25 HP 413: 460 V, 3 Phase, 30 HP	Read only

	Pr.	Explanation	Settings	Factory Setting
	00-01	Display AC motor drive rated current	Display by models	Read only
	00-02	Parameter reset	0: No function 1: Parameter write protect 5: Reset KWH display to 0 6: Reset PLC 7: Reset CANopen index (Slave) 8: Keypad doesn't respond 9: All parameters are reset to factory settings (base frequency is 50 Hz) 10: All parameters are reset to factory settings (base frequency is 60 Hz) 11: All parameters are reset to factory settings (base frequency is 50 Hz) (saving the setting value of user defined parameter 13-01~13-50) 12: All parameters are reset to factory settings (base frequency is 60 Hz) (saving the setting value of user defined parameter 13-01~13-50)	0
✓	00-03	Start-up display selection	0: F (frequency command) 1: H (output frequency) 2: U (multi-function display, see Pr. 00-04) 3: A (output current)	0
✓	00-04	Content of multi-function display (user defined)	0: Display output current (A) (Unit: Amps) 1: Display counter value (c) (Unit: CNT) 2: Display actual output frequency (H.) (Unit: Hz) 3: Display DC-BUS voltage (v) (Unit: Vdc) 4: Display output voltage (E) (Unit: Vac) 5: Display output power angle (n) (Unit: deg) 6: Display output power in kW (P) (Unit: Kw) 7: Display actual motor speed rpm (Unit: rpm) 10: Display PID feedback (b) (Unit: %) 11: Display signal value of AVI analog input terminal (1.) (Unit: %) 12: Display signal value of ACI analog input terminal (2.) (Unit: %) 14: Display the temperature of IGBT (i.) (Unit: ^{o}C) 16: The status of digital input (ON / OFF) (i) 17: Display digital output status ON / OFF (o) 18: Display the multi-stage speed that is executing (S) 19: The corresponding CPU pin status of digital input (d)	3

	Pr.	Explanation	Settings	Factory Setting
			20: The corresponding CPU pin status of digital output (0.) 22: Pulse input frequency (S.) 23: Pulse input position (q.) 25: Overload counting (0.00~100.00 %) (o.) (Unit: %) 26: GFF ground fault (G.) (Unit: %) 27: DC Bus voltage ripple (r.) (Unit: %) 28: Display PLC register D1043 data (C) 30: Display output of user defined (U) 31: H page x 00-05 display user gain (K) 35: Control mode display: 0 = speed control mode (SPD) 36: Present operating carrier frequency of drive (Hz) (J.) 38: Display drive status (6.) 41: KWH display (J) (Unit: kWh) 42: PID target value (h.) (Unit: %) 43: PID offset (o.) (Unit: %) 44: PID output frequency (b.) (Unit: Hz) 46: Display auxiliary frequency value (U.) (Unit: Hz) 47: Display master frequency value (A.) (Unit: Hz) 48: Display frequency value after addition and subtraction of auxiliary and master frequency (L.) (Unit: Hz)	
✓	00-05	Coefficient gain in actual output frequency	0~160.00	1.00
	00-06	Software version	Read only	#.#
✓	00-07	Parameter protection password input	0 ~ 65535 0~3 (the times of password attempts)	0
✓	00-08	Parameter protection password setting	0 ~ 65535 0: No password protection / password is entered correctly (Pr. 00-07) 1: Password has been set	0
	00-10	Control mode	0: Speed mode	0
	00-11	Control of speed mode	0: VF (IM V/F control) 1: VFPG (IM V/F control + Encoder) 2: SVC (Pr. 05-33 set as IM or PM)	0
	00-16	Load selection	0: Normal load 1: Heavy load	1
	00-17	Carrier frequency	Normal load: 2~15 KHz	4
			Heavy load: 2~15 KHz	4
	00-19	PLC command mask	bit 0: Control command forced by PLC control bit 1: Frequency command forced by PLC control	Read Only

	Pr.	Explanation	Settings	Factory Setting
✓	00-20	Source of the master frequency command (AUTO)	0: Digital keypad 1: Communication RS-485 input 2: External analog input (Refer to Pr. 03-00) 3: External UP / DOWN terminal 4: Pulse input without direction command (Refer to Pr. 10-16 without direction) 6: CANopen communication card 7: Digital keypad dial 8: Communication card (not includes CANopen card) [Note]: Need to use with MO setting as 42, or use with KPC-CC01	0
✓	00-21	Source of the operation command (AUTO)	0: Digital keypad 1: External terminals 2: Communication RS-485 input 3: CANopen communication card 5: Communication card (not includes CANopen card) [Note]: Need to use with MO setting as 42, or use with KPC-CC01	0
✓	00-22	Stop method	0: Ramp to stop 1: Coast to stop	0
✓	00-23	Control of motor direction	0: Enable forward / reverse 1: Disable reverse 2: Disable forward	0
	00-24	Memory of digital operator (Keypad) frequency command	Read only	Read only
✓	00-25	User defined characteristics	bit 0~3: user defined decimal place 0000b: no decimal place 0001b: one decimal place 0010b: two decimal place 0011b: three decimal place	0

Pr.	Explanation	Settings	Factory Setting
		bit 4~15: user defined unit 000xh: Hz 001xh: rpm 002xh: % 003xh: kg 004xh: M/S 005xh: kW 006xh: HP 007xh: PPM 008xh: l /m 009xh: kg/s 00Axh: kg/m 00Bxh: kg/h 00Cxh: lb/s 00Dxh: lb/m 00Exh: lb/h 00Fxh: ft/s 010xh: ft/m 011xh: M 012xh: ft 013xh: degC 014xh: degF 015xh: mbar 016xh: bar 017xh: Pa 018xh: kPa 019xh: mWG 01Axh: inWG 01Bxh: ftWG 01Cxh: Psi 01Dxh: Atm 01Exh: L/s 01Fxh: L/m 020xh: L/h 021xh: m3/s 022xh: m3/h 023xh: GPM 024xh: CFM	

	Pr.	Explanation	Settings	Factory Setting
	00-26	Max. user defined value	0: Disable 0~65535 (when Pr. 00-25 set to no decimal place) 0.0~6553.5 (when Pr. 00-25 set to 1 decimal place) 0.0~655.35 (when Pr. 00-25 set to 2 decimal place) 0.0~65.535 (when Pr. 00-25 set to 3 decimal place)	0
	00-27	User defined value	Read only	Read only
	00-29	LOCAL / REMOTE selection	0: Standard HOA function 1: Switching Local / Remote, the drive stops 2: Switching Local / Remote, the drive runs as the REMOTE setting for frequency and operation status 3: Switching Local / Remote, the drive runs as the LOCAL setting for frequency and operation status 4: Switching Local / Remote, the drive runs as LOCAL setting when switch to Local and runs as REMOTE setting when switch to Remote for frequency and operation status.	0
✓	00-30	Source of the master frequency command (HAND)	0: Digital keypad 1: Communication RS-485 input 2: External analog input (Refer to Pr. 03-00) 3: External UP / DOWN terminal 4: Pulse input without direction command (Refer to Pr. 10-16 without direction) 6: CANopen communication card 7: Digital keypad dial 8: Communication card (not includes CANopen card) [Note]: Need to use with MO setting as 41, or use with KPC-CC01	0
✓	00-31	Source of the operation command (HAND)	0: Digital keypad 1: External terminals 2: Communication RS-485 input 3: CANopen communication card 5: Communication card (not includes CANopen card) [Note]: Need to use with MO setting as 41, or use with KPC-CC01	0
✓	00-32	Digital keypad STOP function	0: STOP key disable 1: STOP key enable	0

	Pr.	Explanation	Settings	Factory Setting
	00-35	Source of auxiliary frequency	0: Master and auxiliary frequency function disabled 1: By digital keypad 2: By communication RS-485 input 3: By analog input 4: By external Up / Down key input 5: Pulse input with steering command (refer to Pr. 10-16) 6: By CANopen 8: By communication card	0
	00-36	Selection of master and auxiliary frequency command	0: Master + auxiliary frequency 1: Master - auxiliary frequency 2: Auxiliary - master frequency	0
✓	00-48	Display filter time (Current)	0.001~65.535 sec.	0.100
✓	00-49	Display filter time (Keypad)	0.001~65.535 sec.	0.100
	00-50	Software version (Date)	Read only	#####

01 Basic Parameters

	Pr.	Explanation	Settings	Factory Setting
	01-00	Max. operation frequency of motor 1	0.00~599.00 Hz	60.00/ 50.00
	01-01	Output frequency of motor 1	0.00~599.00 Hz	60.00/ 50.00
	01-02	Output voltage of motor 1	110 V / 230 V series: 0.0 V~255.0 V 460 V series: 0.0~510.0 V	220.0 440.0
	01-03	Mid-point frequency 1 of motor 1	0.00~599.00 Hz	3.00
✓	01-04	Mid-point voltage 1 of motor 1	110 V / 230 V series: 0.0 V~240.0 V 460 V series: 0.0 V~480.0 V	11.0 22.0
	01-05	Mid-point frequency 2 of motor 1	0.00~599.00 Hz	0.50
✓	01-06	Mid-point voltage 2 of motor 1	110 V / 230 V series: 0.0 V~240.0 V 460 V series: 0.0 V~480.0 V	2.0 4.0
	01-07	Min. output frequency of motor 1	0.00~599.00 Hz	0.00
✓	01-08	Min. output voltage of motor 1	110 V / 230 V series: 0.0 V~240.0 V 460 V series: 0.0 V~480.0 V	0.0 0.0
	01-09	Start-up frequency	0.00~599.00 Hz	0.50
✓	01-10	Output frequency upper limit	0.00~599.00 Hz	599.00
✓	01-11	Output frequency lower limit	0.00~599.00 Hz	0.00
✓	01-12	Accel. time 1	Pr. 01-45 = 0: 0.00~600.00 sec. Pr. 01-45 = 1: 0.00~6000.0 sec.	10.00 10.0
✓	01-13	Decel. time 1	Pr. 01-45 = 0: 0.00~600.00 sec. Pr. 01-45 = 1: 0.00~6000.0 sec.	10.00 10.0
✓	01-14	Accel. time 2	Pr. 01-45 = 0: 0.00~600.00 sec. Pr. 01-45 = 1: 0.00~6000.0 sec.	10.00 10.0
✓	01-15	Decel. time 2	Pr. 01-45 = 0: 0.00~600.00 sec. Pr. 01-45 = 1: 0.00~6000.0 sec.	10.00 10.0
✓	01-16	Accel. time 3	Pr. 01-45 = 0: 0.00~600.00 sec. Pr. 01-45 = 1: 0.00~6000.0 sec.	10.00 10.0
✓	01-17	Decel. time 3	Pr. 01-45 = 0: 0.00~600.00 sec. Pr. 01-45 = 1: 0.00~6000.0 sec.	10.00 10.0
✓	01-18	Accel. time 4	Pr. 01-45 = 0: 0.00~600.00 sec. Pr. 01-45 = 1: 0.00~6000.0 sec.	10.00 10.0
✓	01-19	Decel. time 4	Pr. 01-45 = 0: 0.00~600.00 sec. Pr. 01-45 = 1: 0.00~6000.0 sec.	10.00 10.0
✓	01-20	JOG acceleration time	Pr. 01-45 = 0: 0.00~600.00 sec. Pr. 01-45 = 1: 0.00~6000.0 sec.	10.00 10.0
✓	01-21	JOG deceleration time	Pr. 01-45 = 0: 0.00~600.00 sec. Pr. 01-45 = 1: 0.00~6000.0 sec.	10.00 10.0

	Pr.	Explanation	Settings	Factory Setting
✓	01-22	JOG frequency	0.00~599.00 Hz	6.00
✓	01-23	1st / 4th Accel. / decel. frequency	0.00~599.00 Hz	0.00
✓	01-24	S-curve acceleration begin time 1	Pr. 01-45 = 0: 0.00~25.00 sec. Pr. 01-45 = 1: 0.0~250.0 sec.	0.20 0.2
✓	01-25	S-curve acceleration arrival time 2	Pr. 01-45 = 0: 0.00~25.00 sec. Pr. 01-45 = 1: 0.0~250.0 sec.	0.20 0.2
✓	01-26	S-curve deceleration begin time 1	Pr. 01-45 = 0: 0.00~25.00 sec. Pr. 01-45 = 1: 0.0~250.0 sec.	0.20 0.2
✓	01-27	S-curve deceleration arrival time 2	Pr. 01-45 = 0: 0.00~25.00 sec. Pr. 01-45 = 1: 0.0~250.0 sec.	0.20 0.2
	01-28	Skip frequency 1 (upper limit)	0.00~599.00 Hz	0.00
	01-29	Skip frequency 1 (lower limit)	0.00~599.00 Hz	0.00
	01-30	Skip frequency 2 (upper limit)	0.00~599.00 Hz	0.00
	01-31	Skip frequency 2 (lower limit)	0.00~599.00 Hz	0.00
	01-32	Skip frequency 3 (upper limit)	0.00~599.00 Hz	0.00
	01-33	Skip frequency 3 (lower limit)	0.00~599.00 Hz	0.00
	01-34	Zero-speed mode	0: Output waiting 1: Zero-speed operation 2: Fmin (Refer to Pr. 01-07, 01-41)	0
	01-35	Output frequency of motor 2	0.00~599.00 Hz	60.00/ 50.00
	01-36	Output voltage of motor 2	110 V / 230 V series: 0.0 V~255.0 V 460 V series: 0.0~510.0 V	220.0 440.0
	01-37	Mid-point frequency 1 of motor 2	0.00~599.00 Hz	3.00
✓	01-38	Mid-point voltage 1 of motor 2	110 V / 230 V series: 0.0 V~240.0 V 460 V series: 0.0 V~480.0 V	11.0 22.0
	01-39	Mid-point frequency 2 of motor 2	0.00~599.00 Hz	0.50
✓	01-40	Mid-point voltage 2 of motor 2	110 V / 230 V series: 0.0 V~240.0 V 460 V series:0.0 V~480.0 V	2.0 4.0
	01-41	Min. output frequency of motor 2	0.00~599.00 Hz	0.00
✓	01-42	Min. output voltage of motor 2	110 V / 230 V series: 0.0 V~240.0 V 460 V series: 0.0 V~480.0 V	0.0 0.0
	01-43	V/F curve selection	0: V/F curve determined by Pr. 01-00~01-08 1: 1.5th V/F curve 2: 2nd V/F curve	0

	Pr.	Explanation	Settings	Factory Setting
✓	01-44	Auto acceleration / deceleration setting	0: Linear accel. / decel. 1: Auto accel., linear decel. 2: Linear accel., auto decel. 3: Auto accel. / decel. 4: Linear, stall prevention by auto accel. / decel. (limited by Pr. 01-12 to 01-21)	0
	01-45	Time unit for acceleration / deceleration and S curve	0: Unit 0.01 sec. 1: Unit 0.1 sec.	0
✓	01-46	Time for CANopen quick stop	Pr. 01-45 = 0: 0.00~600.00 sec. Pr. 01-45 = 1: 0.0~6000.0 sec.	1.00
	01-49	Deceleration method	0: Normal decel. 1: Overfluxing decel. 2: Traction energy control	0
	01-52	Max. operation frequency of motor 2	0.00~599.00 Hz	60.00/ 50.00
	01-53	Max. operation frequency of motor 3	0.00~599.00 Hz	60.00/ 50.00
	01-54	Output frequency of motor 3	0.00~599.00 Hz	60.00/ 50.00
	01-55	Output voltage of motor 3	110 V / 230V series: 0.0 V~255.0 V 460 V series: 0.0 V~510.0 V	220.0 440.0
	01-56	Mid-point frequency 1 of motor 3	0.00~599.00 Hz	3.00
✓	01-57	Mid-point voltage 1 of motor 3	110 V / 230 V series: 0.0 V~240.0 V 460 V series: 0.0 V~480.0 V	11.0 22.0
	01-58	Mid-point frequency 2 of motor 3	0.00~599.00 Hz	0.50
✓	01-59	Mid-point voltage 2 of motor 3	110 V / 230 V series: 0.0 V~240.0 V 460 V series: 0.0 V~480.0 V	2.0 4.0
	01-60	Min. output frequency of motor 3	0.00~599.00 Hz	0.00
✓	01-61	Min. output voltage of motor 3	110V / 230 V series: 0.0 V~240.0 V 460 V series: 0.0 V~480.0 V	0.0 0.0
	01-62	Max. operation frequency of motor 4	0.00~599.00 Hz	60.00/ 50.00
	01-63	Output frequency of motor 4	0.00~599.00 Hz	60.00/ 50.00
	01-64	Output voltage of motor 4	110 V / 230 V series: 0.0 V~255.0 V 460 V series: 0.0 V~510.0 V	220.0 440.0
	01-65	Mid-point frequency 1 of motor 4	0.00~599.00 Hz	3.00
✓	01-66	Mid-point voltage 1 of motor 4	110V / 230 V series: 0.0 V~240.0 V 460 V series: 0.0 V~480.0 V	11.0 22.0
	01-67	Mid-point frequency 2 of motor 4	0.00~599.00 Hz	0.50

	Pr.	Explanation	Settings	Factory Setting
✓	01-68	Mid-point voltage 2 of motor 4	110 V / 230 V series: 0.0 V~240.0 V 460 V series: 0.0 V~480.0 V	2.0 4.0
	01-69	Min. output frequency of motor 4	0.00~599.00 Hz	0.00
✓	01-70	Min. output voltage of motor 4	110 V / 230V series: 0.0 V~240.0 V 460 V series: 0.0 V~480.0 V	0.0 0.0

02 Digital Input / Output Parameters

Pr.	Explanation	Settings	Factory Setting
02-00	2-wire / 3-wire operation control	0: No function 1: 2-wire mode 1, power on for operation control (M1: FWD / STOP, M2: REV / STOP) 2: 2-wire mode 2, power on for operation control (M1: RUN / STOP, M2: REV / FWD) 3: 3-wire, power on for operation control (M1: RUN, M2: REV / FWD, M3: STOP) 4: 2-wire mode 1，fast start up (M1: FWD / STOP, M2: REV / STOP) 5: 2-wire mode 2，fast start up (M1: RUN / STOP, M2: REV / FWD) 6: 3-wire，fast start up (M1: RUN, M2: REV / FWD, M3: STOP) **IMPORTANT** 1. In fast start up function, terminal output will keep in ready status, drive will response to the command immediately. 2. When using fast start up function, the output terminal will have higher voltage potentially.	1
02-01	Multi-function input command 1 (MI1)	0: No function 1: Multi-stage speed command 1 / multi-stage position command 1 2: Multi-stage speed command 2 / multi-stage position command 2 3: Multi-stage speed command 3 / multi-stage position command 3 4: Multi-stage speed command 4 / multi-stage position command 4 5: Reset 6: JOG operation (By KPC-CC01 or external control) 7: Acceleration / deceleration speed inhibit 8: The 1st, 2nd acceleration / deceleration time selection 9: The 3rd, 4th acceleration / deceleration time selection 10: EF Input (Pr. 07-20) 11: B.B input from external (Base Block)	0
02-02	Multi-function input command 2 (MI2)		0
02-03	Multi-function input command 3 (MI3)		1
02-04	Multi-function input command 4 (MI4)		2
02-05	Multi-function input command 5 (MI5)		3
02-06	Multi-function input command 6 (MI6)		4
02-07	Multi-function input command 7 (MI7)		0

Pr.	Explanation	Settings	Factory Setting
		12: Output stop 13: Cancel the setting of auto accel. / decel. time 15: Rotating speed command from AVI 16: Rotating speed command from ACI 18: Forced to stop (Pr. 07-20) 19: Digital up command 20: Digital down command 21: PID function disabled 22: Clear counter command 23: Input the counter value (MI6) 24: FWD JOG command 25: REV JOG command 28: Emergency stop (EF1) 29: Signal confirmation for Y-connection 30: Signal confirmation for Δ-connection 38: Disable EEPROM write function 40: Force coast to stop 41: HAND switch 42: AUTO switch 48: Mechanical gear ratio switch 49: Drive enable 50: Master dEb input 51: Selection for PLC mode bit 0 52: Selection for PLC mode bit 1 53: Trigger CANopen quick stop 56: Local / Remote Selection 70: Auxiliary frequency is forced to 0 71: Disable PID function, PID output is forced to 0 72: Disable PID function, remain the output value before disabled 73: PID integral gain is forced to 0, integral disabled 74: PID feedback reversed 81: Zero point position signal input of simple positioning 82: OOB loading balance detection 83: Multi-motors (IM) selection bit 0 84: Multi-motors (IM) selection bit 1	

	Pr.	Explanation	Settings	Factory Setting
✓	02-09	UP / DOWN key mode	0: UP / DOWN by the accel. / decel. time 1: UP / DOWN constant speed (Pr. 02-10) 2: Pulse command (Pr. 02-10) 3: External terminals UP / DOWN mode	0
✓	02-10	Constant speed. The accel. / decel. speed of the UP / DOWN Key	0.001~1.000 Hz / ms	0.001
✓	02-11	Digital input response time	0.000~30.000 sec.	0.005
✓	02-12	Digital input mode selection	0000h~FFFFh (0: N.O.; 1: N.C.)	0000
✓	02-13	Multi-function output 1 RY1	0: No function	11
✓	02-16	Multi-function output 2 (MO1)	1: Indication during RUN	0
✓	02-17	Multi-function output 3 (MO2)	2: Operation speed attained	0
			3: Desired frequency attained 1 (Pr. 02-22) 4: Desired frequency attained 2 (Pr. 02-24) 5: Zero speed (Frequency command) 6: Zero speed, include STOP (Frequency command) 7: Over torque 1 (Pr. 06-06~06-08) 8: Over torque 2 (Pr. 06-09~06-11) 9: Drive is ready 10: Low voltage warning (LV) (Pr. 06-00) 11: Malfunction indication 13: Overheat warning (Pr. 06-15) 14: Software brake signal indication (Pr. 07-00) 15: PID feedback error 16: Slip error (oSL) 17: Count value attained, does not return to 0 (Pr. 02-20) 18: Count value attained, returns to 0 (Pr. 02-19) 19: External interrupt B.B. input (Base Block) 20: Warning output 21: Over voltage warning 22: Over-current stall prevention warning 23: Over-voltage stall prevention warning 24: Operation source 25: Forward command 26: Reverse command 29: Output when frequency ≥ Pr. 02-34 30: Output when frequency < Pr. 02-34 31: Y-connection for the motor coil	

	Pr.	Explanation	Settings	Factory Setting
			32: △-connection for the motor coil 33: Zero speed (actual output frequency) 34: Zero speed include stop (actual output frequency) 35: Error output selection 1 (Pr. 06-23) 36: Error output selection 2 (Pr. 06-24) 37: Error output selection 3 (Pr. 06-25) 38: Error output selection 4 (Pr. 06-26) 40: Speed attained (including Stop) 42: Crane function 43: Motor actual speed output < Pr. 02-47 44: Low current output (use with Pr. 06-71~06-73) 45: UVW magnetic contactor ON / OFF switch 46: Master dEb signal output 50: Output for CANopen control 52: Output for communication card control 66: SO output logic A 67: Analog input level reached output 68: SO output logic B 73: Over torque 3 74: Over torque 4	
✓	02-18	Multi-function output direction	0000h~FFFFh (0: N.O.; 1: N.C.)	0000
✓	02-19	Terminal counting value attained (returns to 0)	0~65500	0
✓	02-20	Preliminary counting value attained (not return to 0)	0~65500	0
✓	02-21	Digital output gain (DFM)	1~55	1
✓	02-22	Desired frequency attained 1	0.00~599.00 Hz	60.00/ 50.00
✓	02-23	The width of the desired frequency attained 1	0.00~599.00 Hz	2.00
✓	02-24	Desired frequency attained 2	0.00~599.00 Hz	60.00/ 50.00
✓	02-25	The width of the desired frequency attained 2	0.00~599.00 Hz	2.00
✓	02-34	Output frequency setting for multi-function output terminal	0.00~599.00 Hz (Motor speed when using PG Card)	0.00
✓	02-35	External operation control selection after reset and activate	0: Disable 1: Drive runs if run command exists after reset	0

	Pr.	Explanation	Settings	Factory Setting
✓	02-47	Zero-speed Level of Motor	0~65535 rpm	0
	02-50	Status of multi-function input terminal	Monitor the status of multi-function input terminals	Read only
	02-51	Status of multi-function output terminal	Monitor the status of multi-function output terminals	Read only
	02-52	Display external multi-function input terminals used by PLC	Monitor the status of PLC input terminals	Read only
	02-53	Display external multi-function output terminals used by PLC	Monitor the status of PLC output terminals	Read only
	02-54	Display memory of frequency command used by external terminal	Read only	Read only
	02-58	Multi-function output terminal: function 42: brake frequency checking point	0.00~599.00 Hz	0.00
	02-78	Gear ratio for simple index function	4.0 ~ 1000.0	200.0
	02-79	Automatic positioning angle setting	0.0 ~ 6480.0	180.0
✓	02-80	Automatic positioning deceleration time	0.00 Function disable 0.01 ~ 100.00 s	0.00
✓	02-81	EF active when terminal count value attained	0: Terminal count value attained, no EF display 1: Terminal count value attained, EF active	0
✓	02-82	Initial frequency command (F) mode after stop	0: By Current Freq. Command 1: By Zero Freq. Command 2: Refer to Pr. 02-83 to set up	0
✓	02-83	Initial frequency command (F) setting after stop	0.00~599.0 Hz	60.00

03 Analog Input / Output Parameters

	Pr.	Explanation	Settings	Factory Setting
✓	03-00	Analog input selection (AVI)	0: No function 1: Frequency command 4: PID target value 5: PID feedback signal 6: PTC thermistor input value 11: PT100 thermistor input value 12: Auxiliary frequency input 13: PID compensation value	1
✓	03-01	Analog input selection (ACI)		0
✓	03-03	Analog input bias (AVI)	-100.0~100.0 %	0
✓	03-04	Analog input bias (ACI)	-100.0~100.0 %	0
✓	03-07	Positive / negative bias mode (AVI)	0: No bias 1: Lower than or equal to bias 2: Greater than or equal to bias 3: The absolute value of the bias voltage while serving as the center 4: Serve bias as the center	0
✓	03-08	Positive / negative bias mode (ACI)		
✓	03-10	Reverse setting when analog signal input is negative frequency	0: Negative frequency input is not allowed. Forward and reverse run is controlled by digital keypad or external terminal. 1: Negative frequency input is allowed. Positive frequency = forward run; negative frequency = reverse run. Direction can not be switched by digital keypad or external terminal control.	0
✓	03-11	Analog input gain (AVI)	-500.0~500.0 %	100.0
✓	03-12	Analog input gain (ACI)	-500.0~500.0 %	100.0
✓	03-15	Analog input filter time (AVI)	0.00~20.00 sec.	0.01
✓	03-16	Analog input filter time (ACI)	0.00~20.00 sec.	0.01
✓	03-18	Addition function of the analog input	0: Disable (AVI, ACI) 1: Enable (Exclude analog extension card)	0
✓	03-19	Signal loss selection of analog input 4-20 mA	0: Disable 1: Continue operation at the last frequency 2: Decelerate to 0 Hz 3: Stop immediately and display ACE	0

	Pr.	Explanation	Settings	Factory Setting
✓	03-20	Multi-function output 1 (AFM)	0: Output frequency (Hz) 1: Frequency command (Hz) 2: Motor speed (Hz) 3: Output current (rms) 4: Output voltage 5: DC Bus voltage 6: Power factor 7: Power 9: AVI 10: ACI 12: Iq current command 13: Iq feedback value 14: Id current 15: Id feedback value 16: Vq-axis voltage command 17: Vd-axis voltage command 19: PG2 frequency command 20: CANopen analog output 21: RS-485 analog output 22: Communication card analog output 23: Constant voltage output	0
✓	03-21	Gain of analog output (AFM)	0~500.0 %	100.0
✓	03-22	Analog output when in REV direction (AFM)	0: Absolute value of output voltage 1: Reverse output 0 V; Positive output 0-10 V 2: Reverse output 5-0 V; Positive output 5-10 V	0
✓	03-27	AFM output bias	-100.00~100.00 %	0.00
✓	03-28	AVI terminal input selection	0: 0-10 V 3: -10 V ~ +10 V (Pr. 03-69 ~ 03-74 is valid)	0
✓	03-29	ACI terminal input selection	0: 4-20 mA 1: 0-10 V 2: 0-20 mA	0
✓	03-30	Status of PLC analog output terminal	Monitor the status of PLC analog output terminals bit 1: AFM bit 2: AO10 bit 3: AO11	Read only
✓	03-31	AFM output selection	0: 0-10 V output 1: 0-20 mA output 2: 4-20 mA output	0
✓	03-32	AFM DC output setting level	0.00~100.00 %	0.00

	Pr.	Explanation	Settings	Factory Setting
✓	03-35	AFM filter output time	0.00 ~ 20.00 sec.	0.01
✓	03-39	VR input selection	0：Disable 1：Frequency command	1
✓	03-40	VR input bias	-100.0~100.0 %	0.0
✓	03-41	VR positive / negative bias	0: No bias 1: Lower than or equal to bias 2: Greater than or equal to bias 3: The absolute value of the bias voltage while serving as the center 4: Serve bias as the center	0
✓	03-42	VR gain	-500.0~500.0 %	100.0
✓	03-43	VR filter time	0~2.00 sec.	0.01
✓	03-44	Multi-function MO output by source of AI level	0: AVI 1: ACI	0
✓	03-45	AI upper level 1	-100 % ~100.00 %	50
✓	03-46	AI lower level 2	-100 % ~100.00 %	10
✓	03-50	Analog input curve selection	0: Regular Curve 1: 3 point curve of AVI (& AI10) 2: 3 point curve of ACI (& AI11) 3: 3 point curve of AVI & ACI (& AI10 & AI11) (AI10, AI11 is valid when extension card is installed)	0
✓	03-57	ACI lowest point	03-29 = 1, 0.00~10.00 V 03-29 ≠ 1, 0.00~20.00 mA	4.00
✓	03-58	ACI proportional lowest point	0.00~100.00 %	0.00
✓	03-59	ACI mid-point	03-29 = 1, 0.00~10.00 V 03-29 ≠ 1, 0.00~20.00 mA	12.00
✓	03-60	ACI proportional mid-point	0.00~100.00 %	50.00
✓	03-61	ACI highest point	03-29 = 1, 0.00~10.00 V 03-29 ≠ 1, 0.00~20.00 mA	20.00
✓	03-62	ACI proportional highest point	0.00~100.00 %	100.00
✓	03-63	AVI voltage lowest point	0.00~10.00 V	0.00
✓	03-64	AVI voltage proportional lowest point	-100.00~100.00 %	0.00
✓	03-65	AVI voltage mid-point	0.00~10.00 V	5.00
✓	03-66	AVI voltage proportional mid-point	-100.00~100.00 %	50.00
✓	03-67	AVI voltage highest point	0.00~10.00 V	10.00
✓	03-68	AVI voltage proportional highest point	-100.00~100.00 %	100.00

	Pr.	Explanation	Settings	Factory Setting
✓	03-69	Negative AVI voltage lowest point	0.00~ -10.00 V (valid when Pr. 03-28 set as -10 V ~ +10 V)	0.00
✓	03-70	Negative AVI voltage proportional lowest point	-100.00~100.00 % (valid when Pr. 03-28 set as -10 V ~ +10 V)	0.00
✓	03-71	Negative AVI voltage mid-point	0.00~ -10.00 V (valid when Pr. 03-28 set as -10 V ~ +10 V)	-5.00
✓	03-72	Negative AVI voltage proportional mid-point	-100.00~100.00 % (valid when Pr. 03-28 set as -10 V ~ +10 V)	-50.00
✓	03-73	Negative AVI voltage highest point	0.00~ -10.00 V (valid when Pr. 03-28 set as -10 V ~ +10 V)	-10.00
✓	03-74	Negative AVI voltage proportional highest point	-100.00~100.00 % (valid when Pr. 03-28 set as -10 V ~ +10 V)	-100.00

04 Multi-stage Speed Parameters

	Pr.	Explanation	Settings	Factory Setting
✓	04-00	1st stage speed frequency	0.00~599.00 Hz	0.00
✓	04-01	2nd stage speed frequency	0.00~599.00 Hz	0.00
✓	04-02	3rd stage speed frequency	0.00~599.00 Hz	0.00
✓	04-03	4th stage speed frequency	0.00~599.00 Hz	0.00
✓	04-04	5th stage speed frequency	0.00~599.00 Hz	0.00
✓	04-05	6th stage speed frequency	0.00~599.00 Hz	0.00
✓	04-06	7th stage speed frequency	0.00~599.00 Hz	0.00
✓	04-07	8th stage speed frequency	0.00~599.00 Hz	0.00
✓	04-08	9th stage speed frequency	0.00~599.00 Hz	0.00
✓	04-09	10th stage speed frequency	0.00~599.00 Hz	0.00
✓	04-10	11th stage speed frequency	0.00~599.00 Hz	0.00
✓	04-11	12th stage speed frequency	0.00~599.00 Hz	0.00
✓	04-12	13th stage speed frequency	0.00~599.00 Hz	0.00
✓	04-13	14th stage speed frequency	0.00~599.00 Hz	0.00
✓	04-14	15th stage speed frequency	0.00~599.00 Hz	0.00
✓	04-50	PLC buffer 0	0~65535	0
✓	04-51	PLC buffer 1	0~65535	0
✓	04-52	PLC buffer 2	0~65535	0
✓	04-53	PLC buffer 3	0~65535	0
✓	04-54	PLC buffer 4	0~65535	0
✓	04-55	PLC buffer 5	0~65535	0
✓	04-56	PLC buffer 6	0~65535	0
✓	04-57	PLC buffer 7	0~65535	0
✓	04-58	PLC buffer 8	0~65535	0
✓	04-59	PLC buffer 9	0~65535	0
✓	04-60	PLC buffer 10	0~65535	0
✓	04-61	PLC buffer 11	0~65535	0
✓	04-62	PLC buffer 12	0~65535	0
✓	04-63	PLC buffer 13	0~65535	0
✓	04-64	PLC buffer 14	0~65535	0
✓	04-65	PLC buffer 15	0~65535	0
✓	04-66	PLC buffer 16	0~65535	0
✓	04-67	PLC buffer 17	0~65535	0
✓	04-68	PLC buffer 18	0~65535	0
✓	04-69	PLC buffer 19	0~65535	0

05 Motor Parameters

	Pr.	Explanation	Settings	Factory Setting
	05-00	Motor parameter auto tuning	0: No function 1: Dynamic test for induction motor (IM) 2: Static test for induction motor (IM) 13: High frequency stall test for PM synchronous motor	0
	05-01	Full-load current of induction motor 1 (A)	10~120 % of drive's rated current	#.##
✓	05-02	Rated power of induction motor 1 (kW)	0~655.35 kW	#.##
✓	05-03	Rated speed of induction motor 1 (rpm)	0~65535 1710 (60 Hz 4 poles); 1410 (50 Hz 4 poles)	1710
	05-04	Pole number of induction motor 1	2~20	4
	05-05	No-load current of induction motor 1 (A)	0~ Pr. 05-01 factory setting	#.##
	05-06	Stator resistance (Rs) of induction motor 1	0~65.535 Ω	#.###
	05-07	Rotor resistance (Rr) of induction motor 1	0~65.535 Ω	#.###
	05-08	Magnetizing inductance (Lm) of induction motor 1	0~6553.5 mH	#.#
	05-09	Stator inductance (Lx) of induction motor 1	0~6553.5 mH	#.#
	05-13	Full-load current of induction motor 2 (A)	10~120 % of drive's rated current	#.##
✓	05-14	Rated power of induction motor 2 (kW)	0~655.35 kW	#.##
✓	05-15	Rated speed of induction motor 2 (rpm)	0~65535 1710 (60 Hz 4 poles); 1410 (50 Hz 4 poles)	1710
	05-16	Pole number of induction motor 2	2~20	4
	05-17	No-load current of induction motor 2 (A)	0~ Pr. 05-13 factory setting	#.##
	05-18	Stator resistance (Rs) of induction motor 2	0~65.535 Ω	#.###
	05-19	Rotor resistance (Rr) of induction motor 2	0~65.535 Ω	#.###
	05-20	Magnetizing inductance (Lm) of induction motor 2	0~6553.5 mH	#.#

	Pr.	Explanation	Settings	Factory Setting
	05-21	Stator inductance (Lx) of induction motor 2	0~6553.5 mH	#.#
	05-22	Multi-motors (induction) selection	1: Motor 1 2: Motor 2 3: Motor 3 (VF or SVC control mode only) 4: Motor 4 (VF or SVC control mode only)	1
✓	05-23	Frequency for Y-connection /△-connection switch of induction motor	0.00~599.00 Hz	60.00
	05-24	Y-connection /△-connection switch of induction motor	0: Disable 1: Enable	0
✓	05-25	Delay time for Y-connection /△-connection switch of induction motor	0.000~60.000 sec.	0.200
	05-26	Accumulative Watt-second of motor in low word (W-sec)	Read only	#.#
	05-27	Accumulative Watt-second of motor in high word (W-sec)	Read only	#.#
	05-28	Accumulative Watt-hour of motor (W-Hour)	Read only	#.#
	05-29	Accumulative Watt-hour of motor in low word (KW-Hour)	Read only	#.#
	05-30	Accumulative Watt-hour of motor in high word (KW-Hour)	Read only	#.#
	05-31	Accumulative motor operation time (Min.)	00~1439	0
	05-32	Accumulative motor operation time (Day)	00~65535	0
	05-33	Induction motor or permanent magnet synchronous motors selection	0: Induction Motor 1: SPM 2: IPM	0
	05-34	Full-load current of permanent magnet synchronous motor	0~120 % of drive's rated current	#.#
	05-35	Rated power of permanent magnet synchronous motor	0.00~655.35 kW	#.#
	05-36	Rated speed of permanent magnet synchronous motor	0~65535 rpm	2000
	05-37	Pole number of permanent magnet synchronous motor	0~65535	10

	Pr.	Explanation	Settings	Factory Setting
	05-39	Stator resistance of permanent magnet synchronous motor	0.000~65.535 Ω	0.000
	05-40	Permanent magnet synchronous motor Ld	0.00~655.35 mH	0.00
	05-41	Permanent magnet synchronous motor Lq	0.00~655.35 mH	0.00
	05-43	Ke parameter of permanent magnet synchronous motor	0.0~6553.5 (Unit: V / 1000 rpm)	0
	05-64	Full-load current of induction motor 3 (A)	10~120 % of drive's rated current	#.##
✓	05-65	Rated power of induction motor 3 (kW)	0~655.35 kW	#.##
✓	05-66	Rated speed of induction motor 3 (rpm)	0~65535 1710 (60 Hz 4 poles); 1410 (50 Hz 4 poles)	1710
	05-67	Pole number of induction motor 3	2~20	4
	05-68	No-load current of induction motor 3 (A)	0~ Pr. 05-64 factory setting	#.##
	05-69	Stator resistance (Rs) of induction motor 3	0~65.535 Ω	#.###
	05-70	Full-load current of induction motor 4 (A)	10~120 % of drive's rated current	#.##
✓	05-71	Rated power of induction motor 4 (kW)	0~655.35 kW	#.##
✓	05-72	Rated speed of induction motor 4 (rpm)	0~65535 1710 (60 Hz 4 poles); 1410 (50 Hz 4 poles)	1710
	05-73	Pole number of induction motor 4	2~20	4
	05-74	No-load current of induction motor 4 (A)	0~ Pr. 05-70 factory setting	#.##
	05-75	Stator resistance (Rs) of induction motor 4	0~65.535 Ω	#.###

06 Protection Parameters (1)

	Pr.	Explanation	Settings	Factory Setting
✓	06-00	Low voltage level	110V / 230V: 150.0~220.0 Vdc 460V: 300.0~440.0 Vdc	180.0 360.0
✓	06-01	Over-voltage stall prevention	0: Disabled 110V / 230V: 0.0~450.0 Vdc 460V: 0.0~900.0 Vdc	 380.0 760.0
✓	06-02	Selection for over-voltage stall prevention	0: Traditional over-voltage stall prevention 1: Smart over-voltage stall prevention	0
✓	06-03	Over-current stall prevention during acceleration	Normal Load: 0~150 % (100 % corresponds to the rated current of the drive) Heavy Load: 0~200 % (100 % corresponds to the rated current of the drive)	120 180
✓	06-04	Over-current stall prevention during operation	Normal Load: 0~150 % (100 % corresponds to the rated current of the drive) Heavy Load: 0~200 % (100 % corresponds to the rated current of the drive)	120 180
✓	06-05	Accel. / Decel. time selection of stall prevention at constant speed	0: By current accel. / decel. time 1: By the 1st accel. / decel. time 2: By the 2nd accel. / decel. time 3: By the 3rd accel. / decel. time 4: By the 4th accel. / decel. time 5: By auto accel. / decel.	0
✓	06-06	Over-torque detection selection (motor 1)	0: No function 1: Continue operation after Over-torque detection during constant speed operation 2: Stop after Over-torque detection during constant speed operation 3: Continue operation after Over-torque detection during RUN 4: Stop after Over-torque detection during RUN	0
✓	06-07	Over-torque detection level (motor 1)	110~250 % (100 % corresponds to the rated current of the drive)	120
✓	06-08	Over-torque detection time (motor 1)	0.0~60.0 sec.	0.1

	Pr.	Explanation	Settings	Factory Setting
✓	06-09	Over-torque detection selection (motor 2)	0: No function 1: Continue operation after Over-torque detection during constant speed operation 2: Stop after Over-torque detection during constant speed operation 3: Continue operation after Over-torque detection during RUN 4: Stop after Over-torque detection during RUN	0
✓	06-10	Over-torque detection level (motor 2)	10~250 % (100 % corresponds to the rated current of the drive)	120
✓	06-11	Over-torque detection time (motor 2)	0.0~60.0 sec.	0.1
✓	06-13	Electronic thermal relay selection 1 (motor 1)	0: Inverter motor (with external forced cooling) 1: Standard motor (motor with fan on the shaft) 2: Disabled	2
✓	06-14	Electronic thermal relay action time 1 (motor 1)	30.0~600.0 sec.	60.0
✓	06-15	Temperature level over-heat (OH) warning	0.0~110.0 °C	105.0
✓	06-16	Stall prevention limit level	0~100 % (Pr. 06-03, Pr. 06-04)	100
	06-17	Fault record 1	0: No fault record 1: Over-current during acceleration (ocA) 2: Over-current during deceleration (ocd) 3: Over-current during constant speed (ocn) 4: Ground fault (GFF) 6: Over-current at stop (ocS) 7: Over-voltage during acceleration (ovA) 8: Over-voltage during deceleration (ovd) 9: Over-voltage during constant speed (ovn) 10: Over-voltage at stop (ovS) 11: Low-voltage during acceleration (LvA) 12: Low-voltage during deceleration (Lvd) 13: Low-voltage during constant speed (Lvn) 14: Low-voltage at stop (LvS) 15: Phase loss protection (OrP) 16: IGBT over-heat (oH1) 18: TH1 open: IGBT over-heat protection error (tH1o) 21: Drive over-load (oL) 22: Electronics thermal relay protection 1 (EoL1)	0
	06-18	Fault record 2		0
	06-19	Fault record 3		0
	06-20	Fault record 4		0
	06-21	Fault record 5		0
	06-22	Fault record 6		0
		Fault record 7 (14-70) Fault record 8 (14-71) Fault record 9 (14-72) Fault record 10 (14-73)		

Pr.	Explanation	Settings	Factory Setting
		23: Electronics thermal relay protection 2 (EoL2) 24: Motor PTC overheat (oH3) 26: Over-torque 1 (ot1) 27: Over-torque 2 (ot2) 28: Low current (uC) 31: Memory read-out error (cF2) 33: U-phase current detection error (cd1) 34: V-phase current detection error (cd2) 35: W-phase current detection error (cd3) 36: Clamp current detection error (Hd0) 37: Over-current detection error (Hd1) 40: Auto tuning error (AUE) 41: PID feedback loss (AFE) 42: PG feedback error (PGF1) 43: PG feedback loss (PGF2) 44: PG feedback stall (PGF3) 45: PG slip error (PGF4) 48: Analog current input loss (ACE) 49: External fault input (EF) 50: Emergency stop (EF1) 51: External Base Block (bb) 52: Password error (Pcod) 54: Communication error (CE1) 55: Communication error (CE2) 56: Communication error (CE3) 57: Communication error (CE4) 58: Communication Time-out (CE10) 61: Y-connection / △-connection switch error (ydc) 62: Decel. Energy Backup Error (dEb) 63: Slip error (oSL) 72: Channel 1 (S1~DCM) safety loop error (STL1) 76: Safety torque off (STo) 77: Channel 2 (S2~DCM) safety loop error (STL2) 78: Internal loop error (STL3) 79: U phase Over current before run (Aoc) 80: V phase Over current before run (boc) 81: W phase Over current before run (coc) 82: U phase output phase loss (oPL1) 83: V phase output phase loss (oPL2) 84: W phase output phase loss (oPL3)	

	Pr.	Explanation	Settings	Factory Setting
			87: Drive over load in low frequency (oL3) 89: Initial rotor position detection error (roPd) 101: CANopen software disconnect 1 (CGdE) 102: CANopen software disconnect 2 (CHbE) 104: CANopen hardware disconnect (CbFE) 105: CANopen index setting error (CIdE) 106: CANopen station number setting error (CAdE) 107: CANopen memory error (CFrE) 121: Internal communication error (CP20) 123: Internal communication error (CP22) 124: Internal communication error (CP30) 126: Internal communication error (CP32) 127: Software version error (CP33) 128: Over-torque 3 (ot3) 129: Over-torque 4 (ot4) 134: Electronics thermal relay 3 protection (EoL3) 135: Electronics thermal relay 4 protection (EoL4) 140: GFF detected when power on (Hd6) 141: GFF occurs before run (b4GFF) 142: Auto tuning error 1 (DC test stage) (AUE1) 143: Auto tuning error 2 (High frequency test stage) (AUE2) 144: Auto tuning error 3 (Rotary test stage) (AUE3)	
✓	06-23	Fault output option 1	0~65535 (refer to bit table for fault code)	0
✓	06-24	Fault output option 2	0~65535 (refer to bit table for fault code)	0
✓	06-25	Fault output option 3	0~65535 (refer to bit table for fault code)	0
✓	06-26	Fault output option 4	0~65535 (refer to bit table for fault code)	0
✓	06-27	Electronic thermal relay selection 2 (motor 2)	0: Inverter motor (with external forced cooling) 1: Standard motor (motor with fan on the shaft) 2: Disabled	2
✓	06-28	Electronic thermal relay action time 2 (motor 2)	30.0~600.0 sec.	60.0
✓	06-29	PTC detection selection	0: Warn and keep operation 1: Warn and ramp to stop 2: Warn and coast to stop 3: No warning	0
✓	06-30	PTC level	0.0 ~100.0 %	50.0

	Pr.	Explanation	Settings	Factory Setting
	06-31	Frequency command for malfunction	0.00~599.00 Hz	Read only
	06-32	Output frequency at malfunction	0.00~599.00 Hz	Read only
	06-33	Output voltage at malfunction	0.0~6553.5 V	Read only
	06-34	DC voltage at malfunction	0.0~6553.5 V	Read only
	06-35	Output current at malfunction	0.00~655.35 Amp	Read only
	06-36	IGBT temperature at malfunction	0.0~6553.5 °C	Read only
	06-37	Capacitance temperature at malfunction	0.0~6553.5 °C	Read only
	06-38	Motor speed in rpm at malfunction	0~65535 rpm	Read only
	06-40	Status of multi-function input terminal at malfunction	0000h~FFFFh	Read only
	06-41	Status of multi-function output terminal at malfunction	0000h~FFFFh	Read only
	06-42	Drive's status at malfunction	0000h~FFFFh	Read only
✓	06-44	STO latch selection	0: STO Latch 1: STO No Latch	0
✓	06-45	Treatment to output phase loss detection (OPHL)	0: Warn and keep operation 1: Warn and ramp to stop 2: Warn and coast to stop 3: No warning	3
✓	06-46	Detection time of output phase loss	0.000~65.535 sec.	0.500
✓	06-47	Current detection level of output phase loss	0.00~100.00 %	1.00
✓	06-48	DC Brake time of output phase loss	0.000~65.535 sec.	0.000
✓	06-49	LvX auto reset	0: Disabled 1: Enabled	0
✓	06-53	Treatment for the detected input phase Loss (OrP)	0: Warn and ramp to stop 1: Warn and coast to stop	0

	Pr.	Explanation	Settings	Factory Setting
✓	06-55	Derating protection	0: Constant rated current and limit carrier wave by load current and temperature 1: Constant carrier frequency and limit load current by setting carrier wave 2: Constant rated current (same as setting 0), but close current limit	0
✓	06-56	PT100 voltage level 1	0.000~10.000 V	5.000
✓	06-57	PT100 voltage level 2	0.000~10.000 V	7.000
✓	06-58	PT100 level 1 frequency protect	0.00~599.00 Hz	0.00
✓	06-59	Delay Time of Activating PT100 Level 1 Frequency Protection	0~6000 sec.	60
✓	06-60	Software detection GFF current level	0.0~6553.5 %	60.0
✓	06-61	Software detection GFF filter time	0.00~655.35 sec.	0.10
	06-63	Operation time of fault record 1 (Day)	0~65535 days	Read only
	06-64	Operation time of fault record 1 (Min.)	0~1439 min.	Read only
	06-65	Operation time of fault record 2 (Day)	0~65535 days	Read only
	06-66	Operation time of fault record 2 (Min.)	0~1439 min.	Read only
	06-67	Operation time of fault record 3 (Day)	0~65535 days	Read only
	06-68	Operation time of fault record 3 (Min.)	0~1439 min.	Read only
	06-69	Operation time of fault record 4 (Day)	0~65535 days	Read only
	06-70	Operation time of fault record 4 (Min.)	0~1439 min.	Read only
✓	06-71	Low current setting level	0.0 ~ 100.0 %	0.0
✓	06-72	Low current detection time	0.00 ~ 360.00 sec.	0.00
✓	06-73	Treatment for low current	0 : No function 1 : Warn and coast to stop 2 : Warn and ramp to stop by 2nd deceleration time 3 : Warn and operation continue	0
	06-90	Operation time of fault record 5 (Day)	0~65535 days	Read only
	06-91	Operation time of fault record 5 (Min.)	0~1439 min.	Read only

Pr.	Explanation	Settings	Factory Setting
06-92	Operation time of fault record 6 (Day)	0~65535 days	Read only
06-93	Operation time of fault record 6 (Min.)	0~1439 min.	Read only

07 Special Parameters

	Pr.	Explanation	Settings	Factory Setting
✓	07-00	Software brake level	110 V / 230 V: 350.0~450.0 Vdc 460 V: 700.0~900.0 Vdc	370.0 740.0
✓	07-01	DC brake current level	0~100 %	0
✓	07-02	DC brake time at startup	0.0~60.0 sec.	0.0
✓	07-03	DC brake time at stop	0.0~60.0 sec.	0.0
✓	07-04	DC brake start frequency	0.00~599.00 Hz	0.00
✓	07-05	Voltage increasing gain	1~200 %	100
✓	07-06	Restart after momentary power loss	0: Stop operation 1: Speed tracking by the speed before the power loss 2: Speed tracking by minimum output frequency	0
✓	07-07	Allowed power loss duration	0.0~20.0 sec.	2.0
✓	07-08	Base block time	0.1~5.0 sec.	0.5
✓	07-09	Current limit of speed tracking	20~200 %	100
✓	07-10	Treatment of restart after fault	0: Stop operation 1: Speed tracking by current speed 2: Speed tracking by minimum output frequency	0
✓	07-11	Restart times after fault	0~10	0
✓	07-12	Speed tracking during start-up	0: Disabled 1: Speed tracking by maximum output frequency 2: Speed tracking by motor frequency at start 3: Speed tracking by minimum output frequency	0
✓	07-13	dEb function selection	0: Disabled 1: dEb with auto accel. / decal., the frequency will not return after power recovery 2: dEb with auto accel. / decal., the frequency will return after power recovery	0
✓	07-15	Dwell time at accel.	0.00 ~ 600.00 sec.	0.00
✓	07-16	Dwell frequency at accel.	0.00 ~ 599.00 Hz	0.00
✓	07-17	Dwell time at decel.	0.00 ~ 600.00 sec.	0.00
✓	07-18	Dwell frequency at decel.	0.00 ~ 599.00 Hz	0.00
✓	07-19	Fan cooling control	0: Fan always ON 1: Fan will be OFF after the AC motor drive stops 1 minute 2: When the AC motor drive runs, the fan is ON. When the AC motor drive stops, the fan is OFF 3: Fan turns ON when the temperature attain around 60 °C	3

	Pr.	Explanation	Settings	Factory Setting
✓	07-20	Deceleration of emergency or forced stop	0: Coast to stop 1: Stop by 1st deceleration time 2: Stop by 2nd deceleration time 3: Stop by 3rd deceleration time 4: Stop by 4th deceleration time 5: System Deceleration 6: Automatic Deceleration	0
✓	07-21	Auto energy-saving setting	0: Disabled 1: Enabled	0
✓	07-22	Energy-saving gain	10~1000 %	100
✓	07-23	Auto voltage regulation (AVR) function	0: Enable AVR 1: Disable AVR 2: Disable AVR during deceleration	0
✓	07-24	Filter time of torque compensation (V/F and SVC control mode)	0.001~10.000 sec.	0.050
✓	07-25	Filter time of slip compensation (V/F and SVC control mode)	0.001~10.000 sec.	0.100
✓	07-26	Torque compensation gain	IM: 0~10 (when Pr. 05-33 = 0) PM: 0~5000 (when Pr. 05-33 = 1 or 2)	1
✓	07-27	Slip compensation gain (V/F and SVC control mode)	0.00~10.00 (Default value is 1 in SVC mode)	0.00
✓	07-29	Slip deviation level	0.0~100.0 % 0: No detection	0
✓	07-30	Detection time of slip deviation	0.0~10.0 sec.	1.0
✓	07-31	Treatment of slip deviation	0: Warn and keep operation 1: Warn and ramp to stop 2: Warn and coast to stop 3: No warning	0
✓	07-32	Motor shock compensation factor	0~10000	1000
✓	07-33	Return time of fault restart	0.0~6000.0 sec.	60.0
	07-46	OOB sampling time	0.1 ~ 120.0 sec.	1.0
	07-47	Number of OOB sampling times	00 ~ 32	20
	07-48	OOB average sampling angle	Read Only	#.#
✓	07-62	dEb gain	0~65535	8000
✓	07-71	Torque compensation gain (motor 2)	IM: 0~10 (when Pr. 05-33 = 0) PM: 0~5000 (when Pr. 05-33 = 1 or 2)	1

	Pr.	Explanation	Settings	Factory Setting
✓	07-72	Slip compensation gain (motor 2)	0.00~10.00 (Default value is 1 in SVC mode)	0.00
✓	07-73	Torque compensation gain (motor 3)	IM: 0~10 (when Pr. 05-33 = 0) PM: 0~5000 (when Pr. 05-33 = 1 or 2)	1
✓	07-74	Slip compensation gain (motor 3)	0.00~10.00 (Default value is 1 in SVC mode)	0.00
✓	07-75	Torque compensation gain (motor 4)	IM: 0~10 (when Pr. 05-33 = 0) PM: 0~5000 (when Pr. 05-33 = 1 or 2)	1
✓	07-76	Slip compensation gain (motor 4)	0.00~10.00 (Default value is 1 in SVC mode)	0.00

08 High-function PID Parameters

	Pr.	Explanation	Settings	Factory Setting
✓	08-00	Terminal selection of PID feedback	0: No function 1: Negative PID feedback: by analog input (Pr. 03-00) 2: Negative PID feedback: by PG card pulse input, without direction (Pr. 10-16) 4: Positive PID feedback: by analog input (Pr. 03-00) 5: Positive PID feedback: by PG card pulse input, without direction (Pr. 10-16) 7: Negative PID feedback: by communication protocol 8: Positive PID feedback: by communication protocol	0
✓	08-01	Proportional gain (P)	0.0~500.0	1.0
✓	08-02	Integral time (I)	0.00~100.00 sec.	1.00
✓	08-03	Derivative time (D)	0.00~1.00 sec.	0.00
✓	08-04	Upper limit of integral control	0.0~100.0 %	100.0
✓	08-05	PID output command limit (positive limit)	0.0~110.0 %	100.0
✓	08-06	PID feedback value by communication protocol	-200.00~200.00 %	0.00
✓	08-07	PID delay time	0.0~2.5 sec.	0.0
✓	08-08	Feedback signal detection time	0.0~3600.0 sec.	0.0
✓	08-09	Feedback signal fault treatment	0: Warn and keep operation 1: Warn and ramp to stop 2: Warn and coast to stop 3: Warn and operate at last frequency	0
✓	08-10	Sleep frequency	0.00 ~ 599.00 Hz	0.00
✓	08-11	Wake-up frequency	0.00 ~ 599.00 Hz	0.00
✓	08-12	Sleep time	0.0 ~ 6000.0 sec.	0.0
✓	08-13	PID deviation level	1.0 ~ 50.0 %	10.0
✓	08-14	PID deviation time	0.1~300.0 sec.	5.0
✓	08-15	Filter time for PID feedback	0.1~300.0 sec.	5.0
✓	08-16	PID compensation selection	0: Parameter setting 1: Analog input	0
✓	08-17	PID compensation	-100.0 ~ +100.0 %	0
	08-18	Setting of sleep mode function	0: Refer to PID output command 1: Refer to PID feedback signal	0
✓	08-19	Wakeup integral limit	0.0~200.0 %	50.0

	Pr.	Explanation	Settings	Factory Setting
	08-20	PID mode selection	0: Serial connection 1: Parallel connection	0
	08-21	Enable PID to change operation direction	0: Operation direction can be changed 1: Operation direction can not be changed	0
✓	08-22	Wakeup delay time	0.00~600.00 sec.	0.00
✓	08-23	PID control flag	bit 0 = 1, PID reverse running must follow the setting of Pr. 00-23. bit 0 = 0, PID reverse running refers to PID's calculated value. bit 1 = 1, PID Kp gain is 2 decimal place bit 1 = 0, PID Kp gain is 1 decimal place	2
✓	08-26	PID output command limit (reverse limit)	0.0~110.0 %	100.0
✓	08-27	Acceleration / deceleration time of PID command	0.00~655.35 sec.	0.00
	08-29	Selection of frequency base corresponding to 100.00 % PID	0: PID control output 100.00 % corresponding to max. output frequency (Pr. 01-00) 1: PID control output 100.00 % corresponding to the input value of auxiliary frequency	0

09 Communication Parameters

	Pr.	Explanation	Settings	Factory Setting
✓	09-00	Communication address	1~254	1
✓	09-01	COM1 transmission speed	4.8~115.2 Kbps	9.6
✓	09-02	COM1 transmission fault treatment	0: Warn and continue operation 1: Warn and ramp to stop 2: Warn and coast to stop 3: No warning and continue operation	3
✓	09-03	COM1 time-out detection	0.0~100.0 sec.	0.0
✓	09-04	COM1 communication protocol	1: 7N2 (ASCII) 2: 7E1 (ASCII) 3: 7O1 (ASCII) 4: 7E2 (ASCII) 5: 7O2 (ASCII) 6: 8N1 (ASCII) 7: 8N2 (ASCII) 8: 8E1 (ASCII) 9: 8O1 (ASCII) 10: 8E2 (ASCII) 11: 8O2 (ASCII) 12: 8N1 (RTU) 13: 8N2 (RTU) 14: 8E1 (RTU) 15: 8O1 (RTU) 16: 8E2 (RTU) 17: 8O2 (RTU)	1
✓	09-09	Delay time of communication response	0.0~200.0 ms	2.0
	09-10	Main frequency of the communication	0.00~599.00 Hz	60.00
✓	09-11	Block transfer 1	0~65535	0
✓	09-12	Block transfer 2	0~65535	0
✓	09-13	Block transfer 3	0~65535	0
✓	09-14	Block transfer 4	0~65535	0
✓	09-15	Block transfer 5	0~65535	0
✓	09-16	Block transfer 6	0~65535	0
✓	09-17	Block transfer 7	0~65535	0
✓	09-18	Block transfer 8	0~65535	0
✓	09-19	Block transfer 9	0~65535	0
✓	09-20	Block transfer 10	0~65535	0

	Pr.	Explanation	Settings	Factory Setting
✓	09-21	Block transfer 11	0~65535	0
✓	09-22	Block transfer 12	0~65535	0
✓	09-23	Block transfer 13	0~65535	0
✓	09-24	Block transfer 14	0~65535	0
✓	09-25	Block transfer 15	0~65535	0
✓	09-26	Block transfer 16	0~65535	0
	09-30	Communication decoding method	0: Decoding Method 1 1: Decoding Method 2	1
✓	09-33	PLC command force to 0	0~65535	0
	09-35	PLC address	1~254	2
	09-36	CANopen slave address	0: Disable 1~127	0
	09-37	CANopen speed	0: 1 Mbps 1: 500 Kbps 2: 250 Kbps 3: 125 Kbps 4: 100 Kbps (Delta only) 5: 50 Kbps	0
	09-39	CANopen warning record	bit 0: CANopen software disconnection 1 (CANopen Guarding Time out) bit 1: CANopen software disconnection 2 (CANopen Heartbeat Time out) bit 3: CANopen SDO Time out bit 4: CANopen SDO buffer overflow bit 5: CANopen hardware disconnection warning (Can Bus Off) bit 6: Error protocol of CANopen	0
	09-40	CANopen decoding method	0: Delta defined decoding method 1: CANopen Standard DS402 protocol	1
	09-41	CANopen communication status	0: Node reset state 1: Com reset state 2: Boot up state 3: Pre operation state 4: Operation state 5: Stop state	Read Only

	Pr.	Explanation	Settings	Factory Setting
	09-42	CANopen control status	0: Not ready for use state 1: Inhibit start state 2: Ready to switch on state 3: Switched on state 4: Enable operation state 7: Quick Stop Active state 13: Error reaction activation state 14: Error state	Read Only
	09-43	CANopen reset index	bit 0: CANopen reset, the internal address 20XX is 0 bit 1: CANopen reset, the internal address 264X is 0 bit 2: CANopen reset, the internal address 26AX is 0 bit 3: CANopen reset, the internal address 60XX is 0	65535
	09-60	Identifications for communication card	0: No communication card 1: DeviceNet slave 2: Profibus-DP slave 3: CANopen slave 4: Modbus-TCP slave 5: EtherNet/IP slave 10: Backup power supply	##
	09-61	Firmware version of communication card	Read only	##
	09-62	Product code	Read only	##
	09-63	Error code	Read only	##
✓	09-70	Address of communication card	DeviceNet: 0-63 Profibus-DP: 1-125	1
✓	09-71	Setting of DeviceNet speed	● Standard DeviceNet: 0: 125 Kbps 1: 250 Kbps 2: 500 Kbps 3: 1 Mbps (Delta Only) ● Non-standard DeviceNet: (Delta Only) 0: 10 Kbps 1: 20 Kbps 2: 50 Kbps 3: 100 Kbps 4: 125 Kbps 5: 250 Kbps 6: 500 Kbps 7: 800 Kbps 8: 1 Mbps	2

	Pr.	Explanation	Settings	Factory Setting
✓	09-72	Other setting of DeviceNet speed	0: Disable In this mode, baud rate can only be 125 Kbps, 250 Kbps, 500 Kbps, 1 Mbps in standard DeviceNet speed 1: Enable In this mode, the baud rate of DeviceNet can be same as CANopen (0-8).	0
✓	09-75	IP Configuration of the communication card	0: Static IP 1: Dynamic IP (DHCP)	0
✓	09-76	IP address 1 of the communication card	0~255	0
✓	09-77	IP address 2 of the communication card	0~255	0
✓	09-78	IP address 3 of the communication card	0~255	0
✓	09-79	IP address 4 of the communication card	0~255	0
✓	09-80	Address mask 1 of the communication card	0~255	0
✓	09-81	Address mask 2 of the communication card	0~255	0
✓	09-82	Address mask 3 of the communication card	0~255	0
✓	09-83	Address mask 4 of the communication card	0~255	0
✓	09-84	Getway address 1 of the communication card	0~255	0
✓	09-85	Getway address 2 of the communication card	0~255	0
✓	09-86	Getway address 3 of the communication card	0~255	0
✓	09-87	Getway address 4 of the communication card	0~255	0
✓	09-88	Password for communication card (low word)	0~99	0
✓	09-89	Password for communication card (high word)	0~99	0
✓	09-90	Reset communication card	0: No function 1: Reset, return to factory setting	0

Pr.	Explanation	Settings	Factory Setting
✓ 09-91	Additional setting for communication card	bit 0: Enable IP filter bit 1: Internet parameters enable (1 bit) When IP address is set up, this bit will be enabled. After updating the parameters of communication card, this bit will change to disable. bit 2: Login password enable (1 bit) When enter login password, this bit will be enabled. After updating the parameters of communication card, this bit will change to disable.	0
09-92	Status of communication card	bit 0: Password enable When the communication card is set with password, this bit will be enabled. When the password is clear, this bit will be disabled.	0

10 Speed Feedback Control Parameters

	Pr.	Explanation	Settings	Factory Setting
	10-00	Encoder type selection	0: Disabled 5: Pulse input (MI7)	0
	10-01	Encoder pulse per round	1~20000	600
	10-02	Encoder input type setting	0: Disabled 5: Single-phase input (MI7)	0
✓	10-04	Electrical gear at load side A1	1~65535	100
✓	10-05	Electrical gear at motor side B1	1~65535	100
✓	10-06	Electrical gear at load side A2	1~65535	100
✓	10-07	Electrical gear at motor side B2	1~65535	100
✓	10-08	Treatment for Encoder feedback fault	0: Warn and keep operation 1: Warn and ramp to stop 2: Warn and coast to stop	2
✓	10-09	Detection time of Encoder feedback fault	0.0~10.0 sec. 0: No function	1.0
✓	10-10	Encoder stall level	0~120 % (0: No function)	115
✓	10-11	Detection time of Encoder stall	0.0 ~ 2.0 sec.	0.1
✓	10-12	Treatment for Encoder stall	0: Warn and keep operation 1: Warn and ramp to stop 2: Warn and coast to stop	2
✓	10-13	Encoder slip range	0~50 % (0: No function)	50
✓	10-14	Detection time of Encoder slip	0.0~10.0 sec.	0.5
✓	10-15	Treatment for Encoder stall and slip error	0: Warn and keep operation 1: Warn and ramp to stop 2: Warn and coast to stop	2
✓	10-16	Pulse input type setting	0: Disabled 5: Single-phase input (MI7)	0
✓	10-17	Electrical gear A	1~65535	100
✓	10-18	Electrical gear B	1~65535	100
✓	10-21	PG2 pulse input speed command filter time	0~65.535 sec.	0.100
	10-22	PG2 pulse input speed command mode	0: Electronic frequency 1: Mechanical frequency (base on pole pair)	0
✓	10-29	Top limit of frequency deviation	0.00~100.00 Hz	20.00
✓	10-31	I/F mode, current command	0~150 % Rated current of motor	40
✓	10-32	PM FOC sensorless speed estimator bandwidth	0.00~600.00 Hz	5.00
✓	10-34	PM sensorless speed estimator low-pass filter gain	0.00~655.35	1.00

	Pr.	Explanation	Settings	Factory Setting
✓	10-39	Frequency point when switch from I/F mode to PM sensorless mode.	0.00~599.00 Hz	20.00
✓	10-40	Frequency when switch from PM sensorless observer mode to V/F mode.	0.00~599.00 Hz	20.00
✓	10-42	Initial angle detection pulse value	0.0~3.0	1.0
✓	10-49	Zero voltage time while start up	00.000~60.000 sec.	00.000
✓	10-51	Injection frequency	0~1200 Hz	500
✓	10-52	Injection magnitude	0.0~200.0 V	15.0/ 30.0
✓	10-53	Position detection method	0: Disabled 1: Internal 1/4 rated current attracting the rotor to zero degrees 2: High frequency injection 3: Pulse injection	0

11 Advanced Parameters

	Pr.	Explanation	Settings	Factory Setting
	11-00	System control	bit 3: Dead Time compensation closed bit 7: Selection to save or not save the frequency	0
✓	11-06	ASR 1 gain	0~40 Hz (IM) / 1~100 Hz (PM)	10
✓	11-07	ASR 1 integral time	0.000~10.000 sec.	0.100
	11-41	PWM mode selection	0: 2-phase 2: Space vector	2
✓	11-42	System control flag	0000~FFFFh	0000

13 Macro / User Define Macro

Pr.	Explanation	Settings	Factory Setting
13-00	Application selection	00: Disabled 01: User Parameter 02: Compressor 03: Fan 04: Pump 05: Conveyor 06: Machine tool 07: Packing 08: Textiles	00
13-01 ∫ 13-50	Application parameters (user defined)		

14 Protection Parameters (2)

Pr.	Explanation	Settings	Factory Setting
14-50	Output frequency at malfunction 2	0.00~599.00 Hz	Read only
14-51	DC voltage at malfunction 2	0.0~6553.5 V	Read only
14-52	Output current at malfunction 2	0.00~655.35 Amp	Read only
14-53	IGBT temperature at malfunction 2	-3276.7~3276.7 °C	Read only
14-54	Output frequency at malfunction 3	0.00~599.00 Hz	Read only
14-55	DC voltage at malfunction 3	0.0~6553.5 V	Read only
14-56	Output current at malfunction 3	0.00~655.35 Amp	Read only
14-57	IGBT temperature at malfunction 3	-3276.7~3276.7 °C	Read only
14-58	Output frequency at malfunction 4	0.00~599.00 Hz	Read only
14-59	DC voltage at malfunction 4	0.0~6553.5 V	Read only
14-60	Output current at malfunction 4	0.00~655.35 Amp	Read only
14-61	IGBT temperature at malfunction 4	-3276.7~3276.7 °C	Read only
14-62	Output frequency at malfunction 5	0.00~599.00 Hz	Read only
14-63	DC voltage at malfunction 5	0.0~6553.5 V	Read only
14-64	Output current at malfunction 5	0.00~655.35 Amp	Read only
14-65	IGBT temperature at malfunction 5	-3276.7~3276.7 °C	Read only
14-66	Output frequency at malfunction 6	0.00~599.00 Hz	Read only
14-67	DC voltage at malfunction 6	0.0~6553.5 V	Read only
14-68	Output current at malfunction 6	0.00~655.35 Amp	Read only

	Pr.	Explanation	Settings	Factory Setting
	14-69	IGBT temperature at malfunction 6	-3276.7~3276.7 °C	Read only
	14-70	Fault record 7	Refer to fault record Pr. 6-17~06-22	0
	14-71	Fault record 8	Refer to fault record Pr. 6-17~06-22	0
	14-72	Fault record 9	Refer to fault record Pr. 6-17~06-22	0
	14-73	Fault record 10	Refer to fault record Pr. 6-17~06-22	0
✓	14-74	Over-torque detection selection (motor 3)	0: No function 1: Continue operation after Over-torque detection during constant speed operation 2: Stop after Over-torque detection during constant speed operation 3: Continue operation after Over-torque detection during RUN 4: Stop after Over-torque detection during RUN	0
✓	14-75	Over-torque detection level (motor 3)	10~250 % (100 % corresponds to the rated current of the drive)	120
✓	14-76	Over-torque detection time (motor 3)	0.0~60.0 sec.	0.1
✓	14-77	Over-torque detection selection (motor)	0: No function 1: Continue operation after Over-torque detection during constant speed operation 2: Stop after Over-torque detection during constant speed operation 3: Continue operation after Over-torque detection during RUN 4: Stop after Over-torque detection during RUN	0
✓	14-78	Over-torque detection level (motor 4)	10~250 % (100 % corresponds to the rated current of the drive)	120
✓	14-79	Over-torque detection time (motor 4)	0.0~60.0 sec.	0.1
✓	14-80	Electronic thermal relay selection 3 (motor 3)	0: Inverter motor (with external forced cooling) 1: Standard motor (motor with fan on the shaft) 2: Disabled	2
✓	14-81	Electronic thermal relay action time 3 (motor 3)	30.0~600.0 sec.	60.0
✓	14-82	Electronic thermal relay selection 4 (motor 4)	0: Inverter motor (with external forced cooling) 1: Standard motor (motor with fan on the shaft) 2: Disabled	2
✓	14-83	Electronic thermal relay action time 4 (motor 4)	30.0~600.0 sec.	60.0

[This page intentionally left blank]

Chapter 12 Description of Parameter Settings

12-1 Description of parameter settings

00 Drive Parameters

✓ This parameter can be set during operation.

00-00 Identity Code of the AC Motor Drive

Factory Setting: #.#

Settings Read Only

00-01 Display AC Motor Drive Rated Current

Factory Setting: #.#

Settings Read Only

📖 Pr. 00-00 displays the identity code of the AC motor drive. Using the following table to check if Pr. 00-01 setting is the rated current of the AC motor drive. Pr. 00-01 corresponds to the identity code of Pr. 00-00.

📖 The factory setting is the rated current for normal duty. Please set Pr. 00-16 to 1 to display the rated current for the heavy duty.

Series	115V Series – 1-Phase			230V Series – 1-Phase				
Frame	A	B	C	A/B		B	C	
kW	0.2	0.4	0.75	0.2	0.4	0.75	1.5	2.2
HP	0.25	0.5	1	0.25	0.5	1	2	3
Identity Code	102	103	104	302	303	304	305	306
Rated Current for Heavy Duty	1.6	2.5	4.8	1.6	2.8	4.8	7.5	11
Rated Current for Normal Duty	1.8	2.7	5.5	1.8	3.2	5	8.5	12.5

230V Series – 3-Phase										
Frame	A			B	C		D	E		F
kW	0.2	0.4	0.75	1.5	2.2	3.7	5.5	7.5	11	15
HP	0.25	0.5	1	2	3	5	7.5	10	15	20
Identity Code	202	203	204	205	206	207	208	209	210	211
Rated Current for Heavy Duty	1.6	2.8	4.8	7.5	11	17	25	33	49	65
Rated Current for Normal Duty	1.8	3.2	5	8	12.5	19.5	27	36	51	69

460V Series – 3-Phase											
Frame	A/B		B	C		D		E		F	
kW	0.4	0.75	1.5	2.2	3.7	5.5	7.5	11	15	18.5	22
HP	0.5	1	2	3	5	7.5	10	15	20	25	30
Identity Code	403	404	405	406	407	408	409	410	411	412	413
Rated Current for Heavy Duty	1.5	2.7	4.2	5.5	9	13	17	25	32	38	45
Rated Current for Normal Duty	1.8	3	4.6	6.5	10.5	15.7	20.5	28	36	41.5	49

00-02 Parameter Reset

Factory Setting: 0

Settings
0: No Function
1: Parameter write protect
5: Reset KWH display to 0
6: Reset PLC
7: Reset CANopen index (Slave)
8: Keypad doesn't respond
9: All parameters are reset to factory settings (base frequency is 50 Hz)
10: All parameters are reset to factory settings (base frequency is 60Hz)
11: All parameters are reset to factory settings (base frequency is 50 Hz) (saving the setting value of user defined parameter 13-01~13-50)
12: All parameters are reset to factory settings (base frequency is 60 Hz) (saving the setting value of user defined parameter 13-01~13-50)

- When it is set to 1: all parameters are read only except Pr. 00-02, 00-07, and 00-08. It needs to set Pr. 00-02 to 0 before changing other parameter settings.
- When it is set to 5: kWh display value can be reset to 0 even when the drive is operating. Pr. 05-26, 05-27, 05-28, 05-29, 05-30 reset to 0.
- When it is set to 6: clear internal PLC program (includes the related settings of PLC internal CANopen master)
- When it is set to 7: reset the related settings of CANopen slave.
- When it is set to 9 or 10: all parameters are reset to factory settings. If password is set in Pr. 00-08, input the password set in Pr.00-07 to reset to factory settings.
- When it is set to 6, 9, 10: please re-power the motor drive after setting.

00-03 Start-up Display Selection

Factory setting: 0

Settings
0: F (frequency command)
1: H (output frequency)
2: U (user defined) Pr. 00-04
3: A (output current)

- This parameter determines the start-up display page. User defined choice display according to the setting in Pr. 00-04.

00-04 Content of Multi-function Display (User Defined)

Factory setting: 3

Settings
0: Display output current (A) (Unit: Amps)
1: Display counter value (c) (Unit: CNT)
2: Display actual output frequency (H.) (Unit: Hz)
3: Display DC-BUS voltage (v) (Unit: Vdc)
4: Display output voltage of U, V, W (E) (Unit: Vac)
5: Display output power angle of U, V, W (n) (Unit: deg)

6: Display output power of U, V, W (P) (Unit: kW)
7: Display actual motor speed rpm (r) (Unit: rpm)
10: Display PID feedback (b) (Unit: %)
11: Display signal value of AVI analog input terminal (1.) (Unit: %)
12: Display signal value of ACI analog input terminal (2.) (Unit: %)
14: Display the temperature of IGBT (i.) (Unit: ^{o}C)
16: The status of digital input (ON / OFF) (i)
17: The status of digital output (ON / OFF) (o)
18: Display the multi-stage speed that is executing (S)
19: The corresponding CPU pin status of digital input (d)
20: The corresponding CPU pin status of digital output (0.)
22: Pulse input frequency (S.)
23: Pulse input position (q.)
25: Overload counting (0.00~100.00 %) (o.) (Unit: %)
26: GFF Ground Fault (G.) (Unit: %)
27: DC Bus voltage ripple (r.) (Unit: Vdc)
28: Display PLC register D1043 data (C)
30: Display output of user defined (U)
31: Pr. 00-05 display user gain (K)
35: Control mode display: 0= Speed control mode (SPD)
36: Present operating carrier frequency of drive (Hz) (J.)
38: Display status of drive (6.)
41: KWH display (J) (Unit: kWh)
42: PID target value (h.) (Unit: %)
43: PID offset (o.) (Unit: %)
44: PID output frequency (b.) (Unit: Hz)
46: Display auxiliary frequency value (U.) (Unit: Hz)
47: Display master frequency value (A.) (Unit: Hz)
48: Display frequency value after addition and subtraction of auxiliary and master frequency (L.) (Unit: Hz)

NOTE

1. ● When Pr. 10-01 is set to 1000 and Pr. 10-02 is set to 1, 2, the display range for PG feedback will be from 0 to 4000.
   ● When Pr. 10-01 is set to 1000 and Pr. 10-02 is set to 3, 4, 5, the display range for PG feedback will be from 0 to 1000.
2. ● It can display negative values when setting analog input bias (Pr. 03-03 ~ 03-10).
   Example: assume that AVI input voltage is 0 V, Pr. 03-03 is 10.0 % and Pr. 03-07 is 4 (Serve bias as the center).
3. Example: If MI1 and MI6 are ON, the following table shows the status of the terminals.
   N.O. normally opened contact: (0: OFF, 1: ON)

Terminal	MI7	MI6	MI5	MI4	MI3	MI2	MI1
Status	0	1	0	0	0	0	1

- The value is 0000 0000 0010 0001 in binary and 0021H in HEX. When Pr. 00-04 is set to “16” or “19”, it will display “0021h” with LED u page is ON in the keypad.
- The setting 16 is the ON / OFF status of digital input by Pr. 02-12 setting and the setting 19 is the corresponding CPU pin ON / OFF status of digital input.
- When MI1 / MI2 default setting is two-wire/ three-wire operation control (2-00 ≠ 0), and MI3 set as three-wire, it will not affected by Pr. 02-12.
- User can set 16 to monitor digital input status and then set 19 to check if the wire is normal.

4. Example: Assume that RY: Pr. 02-13 is set to 9 (Drive is ready). After the drive powered on, if there is no other abnormal status, the contact will be ON. The display status will be shown as follows.
   N.O. normally opened contact:

Terminal	MO2	MO1	RY1
Status	0	0	1

- At the meanwhile, if Pr. 00-04 is set to 17 or 20, it will display in hexadecimal “0001h” with LED u page is ON in the keypad.
- The setting 17 is the ON / OFF status of digital output by Pr. 02-18 setting and the setting 20 is the corresponding CPU pin ON / OFF status of digital output.
- User can set 17 to monitor the digital output status and then set 20 to check if the wire is normal.

5. - Set value 8: 100 % means the motor rated torque.
   Motor rated torque = (motor rated power x 60 / 2π) / motor rated rotating speed.
6. - Set value 25: when display value reaches 100.00 %, the drive will show “oL” as an overload warning.
7. - Set value 38:
   bit 0: The drive is running forward.
   bit 1: The drive is running backward.
   bit 2: The drive is ready.
   bit 3: Errors occurred on the drive.
   bit 4: The drive is running.
   bit 5: Warnings occurred on the drive.

00-05 Coefficient Gain in Actual Output Frequency

Factory Setting: 1.00

Settings 0~160.00

This parameter is to set user defined unit coefficient gain. Set Pr. 00-04 = 31 to display the calculation result on the screen (calculation = output frequency * Pr. 00-05).

00-06 Software Version

Factory Setting: #.#

Settings Read only

00-07 Parameter Protection Password Input

Factory Setting: 0

Settings 0～65535

Display 0~3 (the times of password attempts)

- This parameter allows user to enter their password (which is set in Pr. 00-08) to unlock the parameter protection and to make changes to the parameter.
- To avoid future inconvenience, be sure to write down the set value after setting this parameter.
- Pr. 00-07 and Pr. 00-08 are used to prevent personnel set other parameters mistakenly.
- When the user forget the password, clear the setting by input 9999 and press ENTER key, then input 9999 again and press ENTER within 10 seconds. After decoding, all the settings will return to factory setting.
- When setting the password, all the parameters are read 0, except Pr. 00-08.

00-08 Parameter Protection Password Setting

Factory Setting: 0

Settings	0～65535
	0: No password protection or password is entered correctly (Pr. 00-07)
	1: Password has been set

- This parameter is for setting the password protection. Password can be set directly at first time. The value of Pr. 00-08 will become 1 after setting, which means password protection is activated. When the password is set, if any parameter setting needs to be changed, be sure to enter correct password in Pr. 00-07, and then the password will be inactivated temporarily with Pr. 00-08 changing to 0. At this time, parameters setting can be changed. After setting, re-power the motor drive, and the password will be activated again.
- To cancel the password protection, after entering correct password in Pr. 00-07, Pr. 00-08 also needs to be set as 0 again to inactive password protection permanently. If not, password protection will be active after motor drive re-power.
- The keypad copy function will work normally only when the password protection is inactivated temporarily or permanently, and the password set in Pr. 00-08 will not be copied to keypad. So when copying parameters from keypad to motor drive, the password need to be set manually again in the motor drive to active password protection.

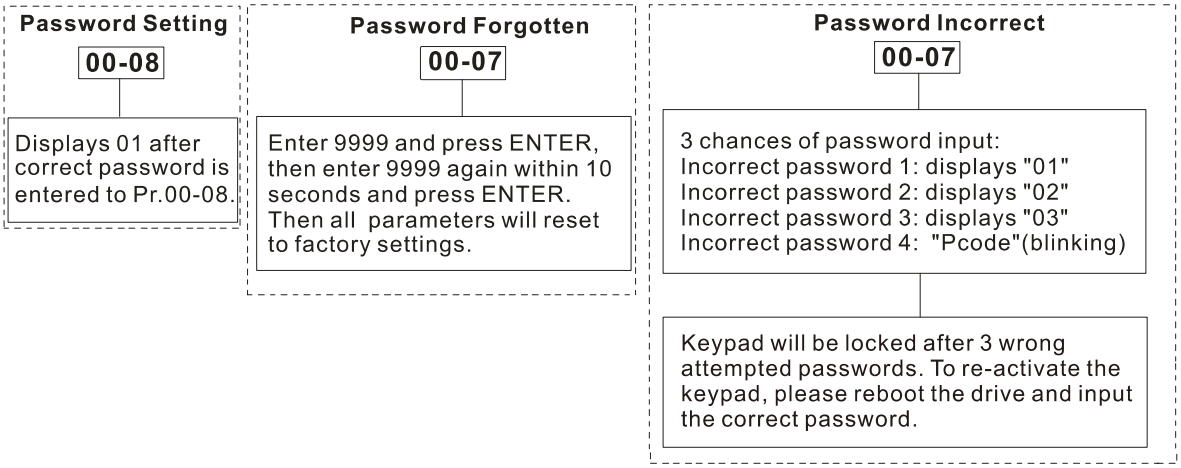

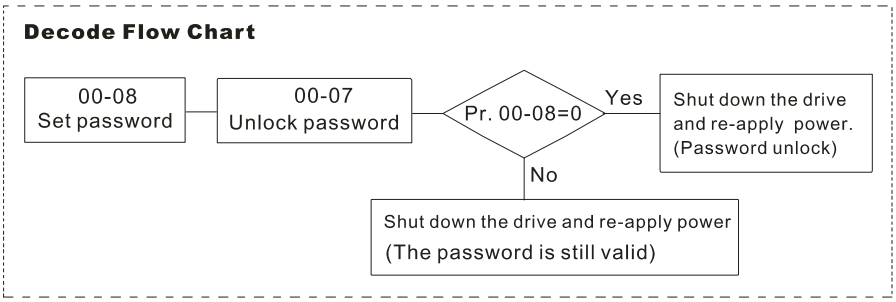

00-10 Control Mode

Factory Setting: 0

Settings 0: Speed mode

This parameter determines the control mode of the AC motor drive.

00-11 Control of Speed Mode

Factory Setting: 0

Settings 0: V/F (IM V/F control)
1: VFPG (IM V/F control + Encoder)
2: SVC (Pr. 05-33 set as IM or PM)

This parameter determines the control mode of the AC motor drive:

0: IM V/F control: user can design proportion of V/F as required and control multiple motors simultaneously.

1: IM V/F control + Encoder pulse input: user can use encoder for the closed-loop speed control.

2: IM sensorless vector control: get the optimal control by the auto-tuning of motor parameters.

When Pr. 00-10 = 0 and set Pr. 00-11 to 0, the V/F control diagram is shown as follows:

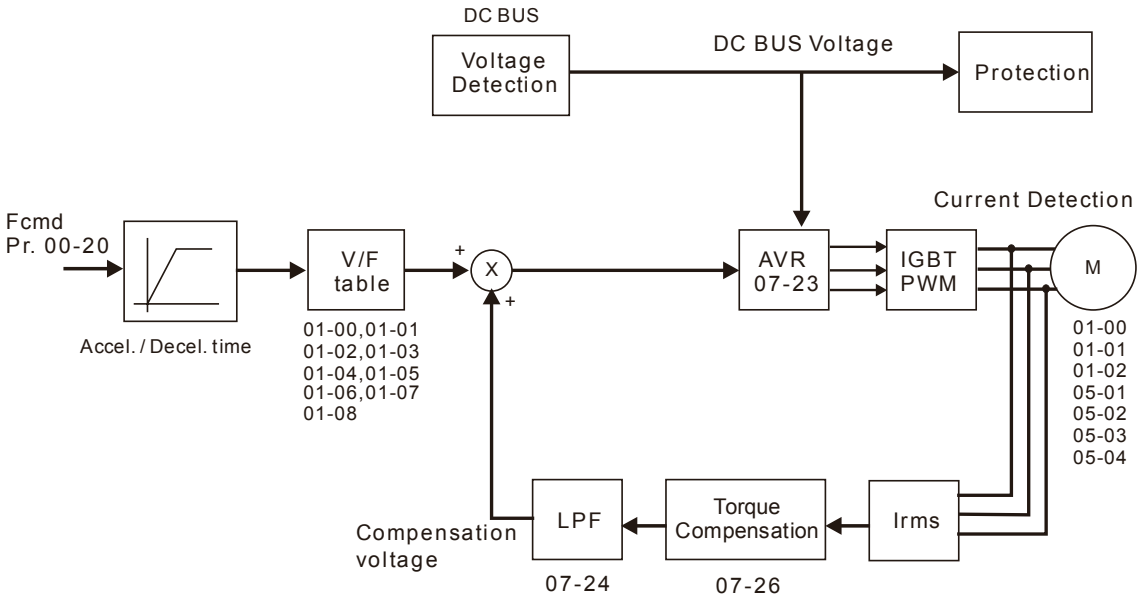

When Pr. 00-10 = 0 and set Pr. 00-11 to 1, the V/F control + encoder diagram is shown as follows:

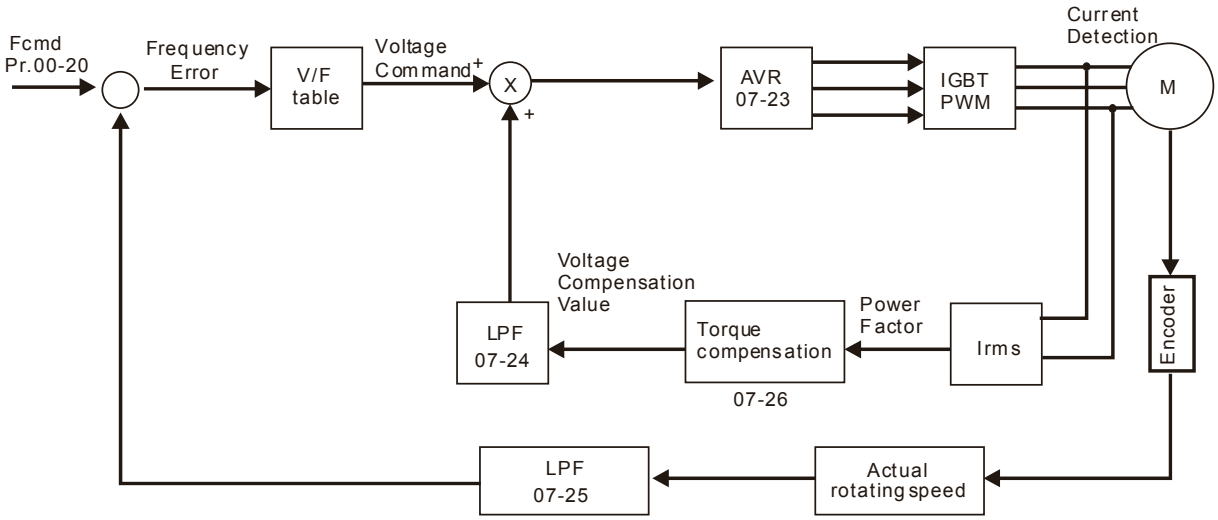

When Pr. 00-10 = 0 and set Pr. 00-11 to 2, the sensorless vector control diagram is shown as follows:

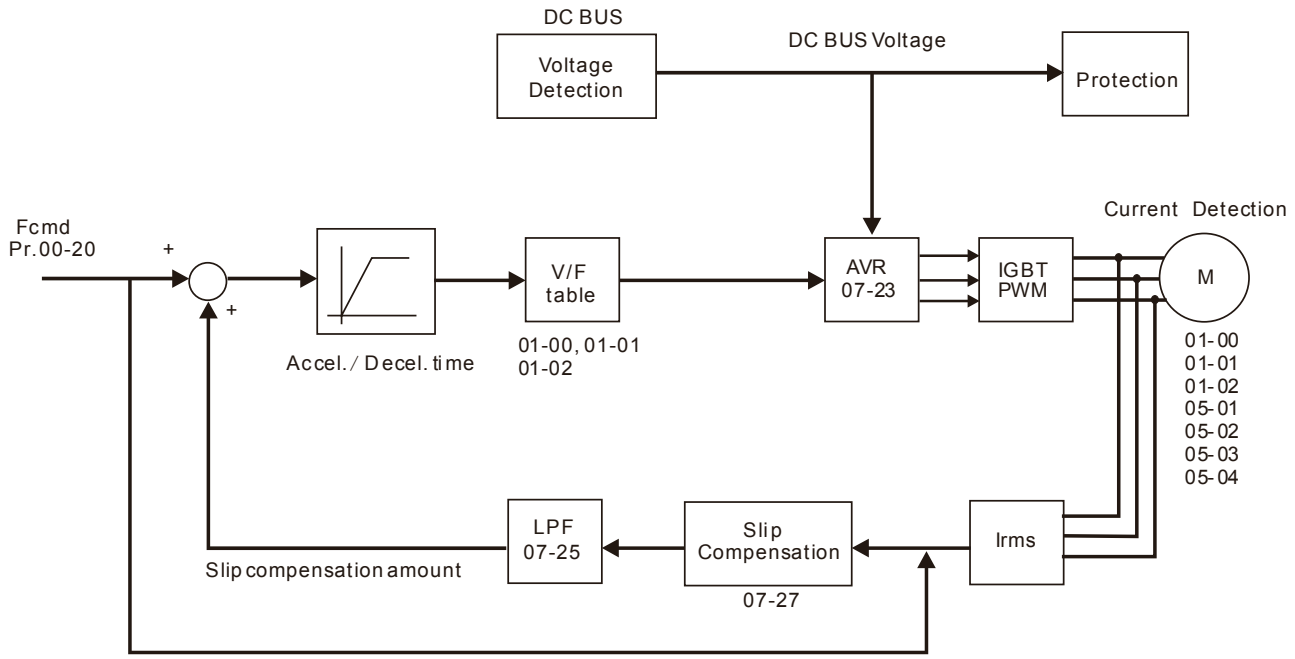

00-16 Load Selection

Factory Setting: 1

Settings 0: Normal load
1: Heavy load

Normal duty: over load rated output current 150 % in 3 seconds. (120 %, 1 minutes) Please refer to Pr. 00-17 for the setting of carrier. Refer to Pr. 00-01 or specification table for the rated current.

Heavy duty: over load rated output current 200 % in 3 seconds. (150 %,1 minutes) Please refer to Pr. 00-17 for the setting of carrier wave. Refer to Pr. 00-01 or specification table for the rated current.

When the set value of Pr. 00-16 changes, Pr. 00-01 will follow the change, the default value and maximum of Pr. 06-03, 06-04 will change according to its change.

In Normal Duty, the default setting of Pr. 06-03 and Pr. 06-04 is 160 %, maximum is 180 %. However, if DC voltage is higher than 700 Vdc (460V series) or 350V (230V series), then the maximum will be 145 %.

In Heavy Duty, the default setting of Pr. 06-03 and Pr. 06-04 is 180 %, maximum is 200 %. However, if DC voltage is higher than 700 Vdc (460V series) or 350V (230V series), then the maximum will be 165 %

00-17 Carrier Frequency

Factory Setting: 4 / 4

Settings Normal load: 2~15 KHz
Heavy load: 2~15 KHz

This parameter determinates the PWM carrier frequency of the AC motor drive.

Series	230V		460V	
Models	1~15HP [0.75~11kW]	20~30HP [15~37kW]	1~20HP [0.75~15kW]	25~40HP [18.5~55kW]
Settings Range	02~15kHz	02~10kHz	02~15kHz	02~10kHz
Normal Duty Factory Setting	4 kHz			
Heavy Duty Factory Setting	4 kHz			

Carrier Frequency	Acoustic Noise	Electromagnetic Noise or Leakage Current	Heat Dissipation	Current Wave
2 kHz	Significant	Minimal	Minimal	
8 kHz				
15 kHz	Minimal	Significant	Significant	

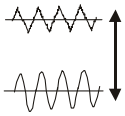

📖 From the table, we see that the PWM carrier frequency has a significant influence on the electromagnetic noise, AC motor drive heat dissipation, and motor acoustic noise. Therefore, if the surrounding noise is greater than the motor noise, lower the carrier frequency is good to reduce the temperature rise. Although it is quiet operation in the higher carrier frequency, the entire wiring and prevention of interference should be considered.

📖 When the carrier frequency is higher than the factory setting, must decreasing the carrier frequency to protect the drive. Refer to Pr. 06-55 for the related setting and details.

00-19 PLC Command Mask

Factory Setting: Read Only

Settings bit 0: Control command forced by PLC control
bit 1: Frequency command forced by PLC control

📖 This parameter determines if frequency command or control command is locked by PLC.

00-20 Source of the Master Frequency Command (AUTO)

Factory Setting: 0

Settings
0: Digital keypad
1: Communication RS-485 input
2: External analog input (Refer to Pr. 03-00)
3: External UP / DOWN terminal
4: Pulse input without direction command (Refer to Pr. 10-16 without direction)
6: CANopen communication card
7: Digital keypad dial
8: Communication card (not includes CANopen card)
[Note]: Need to use with MO setting as 42, or use with KPC-CC01

- The AUTO / HAND mode can be switched by the keypad KPC-CC01 (optional) or multi-function input terminal (MI) to set the source of the master frequency.
- Pr. 00-20 and Pr. 00-21 are for the settings of frequency source and operation source in AUTO mode. Pr. 00-30 and Pr. 00-31 are for the settings of frequency source and operation source in HAND mode.
- The factory setting of frequency source or operation source is for AUTO mode. It will return to AUTO mode whenever power on again after power off. If there is multi-function input terminal used to switch AUTO / HAND mode, the highest priority is the multi-function input terminal. When the external terminal is OFF, the drive will not accept any operation signal and cannot execute JOG.

00-21 Source of the Operation Command (AUTO)

Factory Setting: 0

Settings	0: Digital keypad
	1: External terminals
	2: Communication RS-485 input
	3: CANopen communication card
	5: Communication card (not includes CANopen card)
	[Note]：Need to use with MO setting as 42, or use with KPC-CC01

- It is used to set the source of the operation frequency in AUTO mode.
- When the operation command is controlled by the keypad KPC-CC01 (optional), keys RUN, STOP and JOG (F1) are valid.

00-22 Stop Method

Factory Setting: 0

Settings	0: Ramp to stop
	1: Coast to stop

- The parameter determines how the motor is stopped when the drive receives stop command.

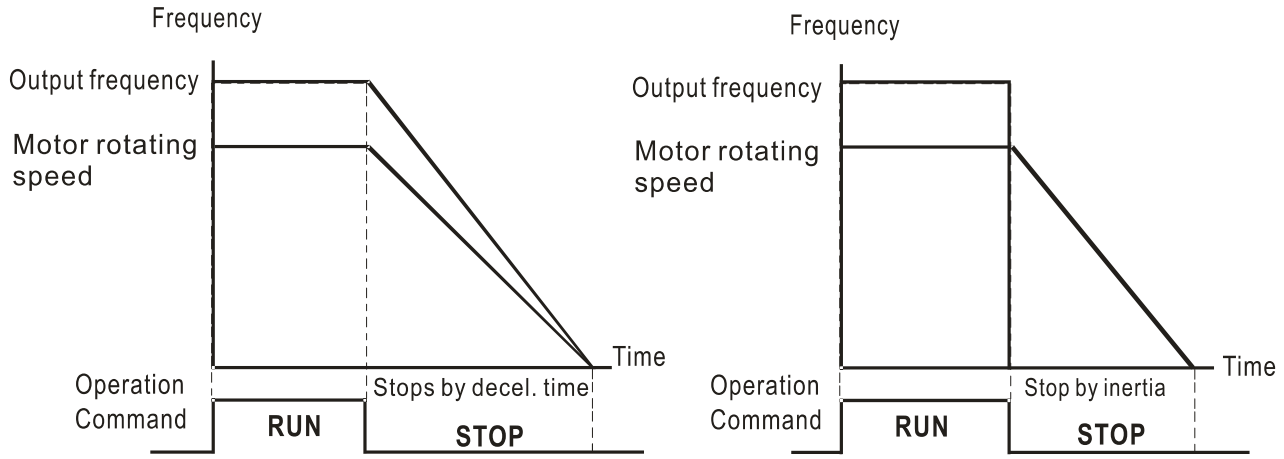

Ramp to Stop and Coast to Stop

1. **Ramp to stop:** the AC motor drive decelerates to 0 or minimum output frequency (Pr. 01-09) according to current set deceleration time and then stop (by Pr. 01-07).

2. **Coast to stop:** the AC motor drive stops output immediately, and the motor free runs to stop according to the load inertia.

☑ It is recommended to use "ramp to stop" for safety of personnel or to prevent material from being wasted in applications where the motor must stop immediately after the drive stops. The deceleration time has to be set accordingly.

☑ If the motor free running is allowed or the load inertia is large, it is recommended to select "coast to stop". For example, blowers, punching machines and pumps.

00-23 Control of Motor Direction

Factory Setting: 0

Settings 0: Enable forward / reverse
1: Disable reverse
2: Disable forward

This parameter enables the AC motor drives to run in the forward / reverse Direction. It may be used to prevent a motor from running in a direction that would consequently injure the user or damage the equipment.

00-24 Memory of Digital Operator (Keypad) Frequency Command

Factory Setting: Read Only

Settings Read only

If keypad is the source of frequency command, when Lv or Fault occurs, the present frequency command will be saved in this parameter.

00-25 User Defined Characteristics

Factory Setting: 0

Settings bit 0~3: user defined decimal place
0000h-0000b: no decimal place
0001h-0001b: one decimal place
0002h-0010b: two decimal place
0003h-0011b: three decimal place
bit 4~15：user defined unit
000xh: Hz
001xh: rpm
002xh: %
003xh: kg
004xh: M/S
005xh: kW
006xh: HP
007xh: ppm
008xh: l / m
009xh: kg/s
00Axh: kg/m
00Bxh: kg/h

00Cxh: lb/s
00Dxh: lb/m
00Exh: lb/h
00Fxh: ft/s
010xh: ft/m
011xh: M
012xh: ft
010xh: ft/m
011xh: M
012xh: ft
013xh: degC
014xh: degF
015xh: mbar
016xh: bar
017xh: Pa
018xh: kPa
019xh: mWG
01Axh: inWG
01Bxh: ftWG
01Cxh: Psi
01Dxh: Atm
01Exh: L/s
01Fxh: L/m
020xh: L/h
021xh: m3/s
022xh: m3/h
023xh: GPM
024xh: CFM

🕮 bit 0~3: Control frequency F page, unit of user defined (Pr. 00-04 = d10, PID feedback value) and the decimal point of Pr. 00-26 which supports up to 3 decimal points.

🕮 bit 4~15: Control frequency F page, unit of user defined (Pr. 00-04 = d10, PID feedback value) and the displayed units of Pr. 00-26.

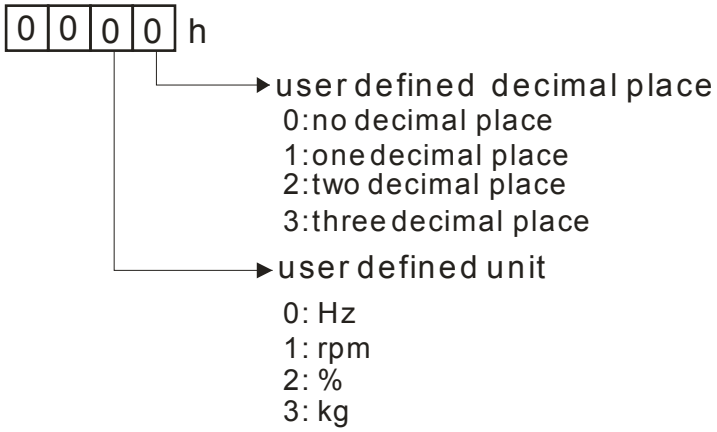

Must be converted to decimal when using the keypad to set parameters.

Example: If user defined unit is inWG and the third decimal point, according to the information above, corresponding to inWG is 01Axh (x is the set decimal point), and corresponding to the third decimal place is 0003h. Then inWG and the third decimal point displayed in hexadecimal is 01A3h, converted to decimal is 01A3h = 419. Set Pr. 00-25 = 419 to complete setting.

00-26 Max. User Defined Value

Factory Setting: 0

Settings 0: Disable
0~65535 (when Pr. 00-25 set to no decimal place)
0.0~6553.5 (when Pr. 00-25 set to 1 decimal place)
0.0~655.35 (when Pr. 00-25 set to 2 decimal place)
0.0~65.535 (when Pr. 00-25 set to 3 decimal place)

When Pr. 00-26 is NOT set to 0, the user defined value is enabled. After selecting displayed unit and decimal point by Pr. 00-25, the setting value of Pr. 00-26 will correspond to Pr. 01-00 (Max. operation frequency of motor), then the operation frequency of motor will be a linear correspondence with displayed value of digital keypad.

Example: When the frequency at Pr. 01-00 = 60.00 Hz, the max. user defined value at Pr. 00-26 is 100.0 %. That also means Pr. 00-25 is set at 0021h to select % as the unit.

NOTE

The drive will display as Pr. 00-25 setting when Pr. 00-25 is properly set and Pr. 00-26 is not 0.

00-27 User Defined Value

Factory Setting: Read only

Settings Read only

Pr. 00-27 will display user defined value when Pr. 00-26 is not set to 0.

User defined value is valid only when Pr. 00-20 (source of frequency) is set to digital keypad or RS-485 communication.

00-29 LOCAL / REMOTE Selection

Factory Setting: 0

Settings 0: Standard HOA function
1: Switching Local / Remote, the drive stops
2: Switching Local / Remote, the drive runs as the REMOTE setting for frequency and operation status
3: Switching Local / Remote, the drive runs as the LOCAL setting for frequency and operation status
4: Switching Local / Remote, the drive runs as LOCAL setting when switch to Local and runs as REMOTE setting when switch to Remote for frequency and operation status.

AUTO / HAND mode can be selected or switched by using digital keypad KPC-CC01 (optional) or setting multi-function input terminal MI = 41, 42.

- The factory setting of Pr. 00-29 is 0 (standard Hand-Off-Auto function). The AUTO frequency and source of operation can be set by Pr. 00-20 and Pr. 00-21, and the HAND frequency and source of operation can be set by Pr. 00-30 and Pr. 00-31.
- When external terminal (MI) is set to 41 and 42 (AUTO / HAND mode), the settings of Pr. 00-29 = 1,2,3,4 will be disabled. The external terminal has the highest priority of command, and Pr. 00-29 will function as standard HOA mode.
- When Pr. 00-29 is not set to 0, Local / Remote function is enabled, the top right corner of digital keypad KPC-CC01 (optional) will display “LOC” or “REM”. The LOCAL frequency and source of operation can be set by Pr. 00-20 and Pr. 00-21, and the REMOTE frequency and source of operation can be set by Pr. 00-30 and Pr. 00-31. LOC / REM mode can be selected or switched by using digital keypad KPC-CC01 (optional) or setting multi-function input terminal MI = 56. The AUTO key of the digital keypad is for the REMOTE function, and HAND key is for the LOCAL function.
- When external terminal (MI) is set to 56 for LOC / REM mode selection, if Pr. 00-29 is set to 0, then the external terminal function is disabled.
- When external terminal (MI) is set to 56 for LOC / REM mode selection, if Pr. 00-29 is not set to 0, then AUTO / HAND key will be disabled, and the external terminal has the highest priority of command.

00-30 Source of the Master Frequency Command (HAND)

Factory Setting: 0

Settings
0: Digital keypad
1: Communication RS-485 input
2: External analog input (Refer to Pr. 03-00)
3: External UP / DOWN terminal
4: Pulse input without direction command (Refer to Pr.10-16 without direction)
6: CANopen communication card
7: Digital keypad dial
8: Communication card (not includes CANopen card)
[Note]: Need to use with MO setting as 41, or use with KPC-CC01

- It is used to set the source of the master frequency in HAND mode.

00-31 Source of the Operation Command (HAND)

Factory Setting: 0

Settings
0: Digital keypad
1: External terminals
2: Communication RS-485 input
3: CANopen communication card
5: Communication card (not includes CANopen card)
[Note]: Need to use with MO setting as 41, or use with KPC-CC01

- AUTO / HAND mode can be selected or switched by using digital keypad KPC-CC01 (optional) or setting multi-function input terminal MI = 41, 42.

- Pr. 00-20 and 00-21 are for the settings of frequency source and operation source in AUTO mode. Pr. 00-30 and 00-31 are for the settings of frequency source and operation source in HAND mode.
- The factory setting of frequency source or operation source is for AUTO mode. It will return to AUTO mode whenever power on again after power off. If there is multi-function input terminal used to switch AUTO / HAND mode. The highest priority is the multi-function input terminal. When the external terminal is OFF, the drive will not accept any operation signal and cannot execute JOG.

00-32 Digital Keypad STOP Function

Factory Setting: 0

Settings 0: STOP key disable
1: STOP key enable

- This parameter is valid when the source of operation is not set as digital keypad (Pr. 00-21 ≠ 0). When Pr. 00-21 = 0, the STOP key of digital keypad will not be affected by this parameter.

00-35 Source of Auxiliary Frequency

Factory Setting: 0

Settings 0: Master and auxiliary frequency function disabled
1: By digital keypad
2: By communication RS-485 input
3: By analog input
4: By external Up / Down key input
5: Pulse input with steering command (refer to Pr. 10-16)
6: By CANopen
8: By communication card

00-36 Selection of Master and Auxiliary Frequency Command

Factory Setting: 0

Settings 0: Master + auxiliary frequency
1: Master - auxiliary frequency
2: Auxiliary - master frequency

- Master and auxiliary frequency command sets the source of master frequency by Pr. 00-20, and sets the source of auxiliary frequency by Pr. 00-35. Addition and subtraction mode of auxiliary / master frequency is set by Pr. 00-36.
- When Pr. 00-36 = 0, 1, 2, accelerating and decelerating by the system (includes S-curve) after addition and subtraction of auxiliary / master frequency, and then be outputted as control command.
- If the value received is negative after addition and subtraction of auxiliary / master frequency, then Pr. 03-10 determines whether to change the running direction.
- If the source of master frequency (Pr. 00-20 = 0) or the source of auxiliary frequency (Pr. 00-35 = 1) is set by keypad, then F page of keypad displays setting frequency, to set master frequency or auxiliary frequency. If the source of master frequency or auxiliary frequency is NOT

set by keypad (Pr. 00-20 ≠ 0 and Pr. 00-35 ≠ 1), the F page displays the value after addition and subtraction of auxiliary / master frequency.

📖 When setting the source of master frequency and auxiliary frequency, Pr. 00-35 can NOT be set the same as Pr. 00-20 or Pr. 00-30.

00-48 Display Filter Time (Current)

Factory Setting: 0.100

Settings 0.001~65.535 sec.

📖 Set this parameter to minimize the current fluctuation displayed by digital keypad.

00-49 Display Filter Time (Keypad)

Factory Setting: 0.100

Settings 0.001~65.535 sec.

📖 Set this parameter to minimize the value fluctuation displayed by digital keypad.

00-50 Software Version (Date)

Factory Setting: #####

Settings Read only

📖 This parameter displays current software version of drive by date.

01 Basic Parameters

✓ This parameter can be set during operation.

01-00	Max. Operation Frequency of Motor 1
01-52	Max. Operation Frequency of Motor 2
01-53	Max. Operation Frequency of Motor 3
01-62	Max. Operation Frequency of Motor 4

Factory Setting: 60.00 / 50.00

Settings 00.00~599.00 Hz

📖 This parameter determines the maximum operation frequency range of drive. This setting is frequency range corresponding to maximum value of analog input frequency setting signal (0~10V, 4~20 mA, 0~20 mA，±10V).

📖 When the high speed mode is on, maximum operation frequency is 0.00~1500.0 Hz.

01-01	Output Frequency of Motor 1
01-35	Output Frequency of Motor 2
01-54	Output Frequency of Motor 3
01-63	Output Frequency of Motor 4

Factory Setting: 60.00 / 50.00

Settings 00.00~599.00 Hz

📖 This value should be set according to the rated frequency of the motor as indicated on the motor nameplate. If the motor is 60 Hz, the setting should be 60 Hz. If the motor is 50 Hz, the setting should be 50 Hz.

01-02	Output Voltage of Motor 1
01-36	Output Voltage of Motor 2
01-55	Output Voltage of Motor 3
01-64	Output Voltage of Motor 4

Factory Setting: 220.0 / 440.0

Settings 110 V / 230 V series: 0.0 V~255.0 V
460 V series: 0.0~510.0 V

📖 This value should be set according to the rated voltage of the motor as indicated on the motor nameplate. If the motor is 220V, the setting should be 220.0 V. If the motor is 200V, the setting should be 200.0 V.

📖 A wide variety of motors are sold in the market, but the power system for each country is different. The economic and convenient way to solve this problem is to install the AC motor drive. The drive can deal with different voltage and frequency. Besides, it can also exert the original characteristics and life of the motor.

01-03	Mid-point Frequency 1 of Motor 1

Factory Setting: 3.00

Settings 0.00~599.00 Hz

01-04 Mid-point Voltage 1 of Motor 1

Factory Setting: 11.0 / 22.0

Settings 110 V / 230 V series: 0.0 V~240.0 V
460 V series: 0.0 V~480.0 V

01-37 Mid-point Frequency 1 of Motor 2

Factory Setting: 3.00

Settings 0.00~599.00 Hz

01-38 Mid-point Voltage 1 of Motor 2

Factory Setting: 11.0 / 22.0

Settings 110 V / 230 V series: 0.0 V~240.0 V
460 V series: 0.0 V~480.0 V

01-56 Mid-point Frequency 1 of Motor 3

Factory Setting: 3.00

Settings 00.00~599.00 Hz

01-57 Mid-point Voltage 1 of Motor 3

Factory Setting: 11.0 / 22.0

Settings 110 V / 230 V series: 0.0 V~240.0 V
460 V series: 0.0 V~480.0 V

01-65 Mid-point Frequency 1 of Motor 4

Factory Setting: 3.00

Settings 00.00~599.00 Hz

01-66 Mid-point Voltage 1 of Motor 4

Factory Setting: 11.0 / 22.0

Settings 110 V / 230 V series: 0.0 V~240.0 V
460 V series: 0.0 V~480.0 V

01-05 Mid-point Frequency 2 of Motor 1

Factory Setting: 0.50

Settings 0.00~599.00 Hz

01-06 Mid-point Voltage 2 of Motor 1

Factory Setting: 2.0 / 4.0

Settings 110 V / 230 V series: 0.0 V~240.0 V
460 V series: 0.0 V~480.0 V

01-39 Mid-point Frequency 2 of Motor 2

Factory Setting: 0.50

Settings 0.00~599.00 Hz

01-40 Mid-point Voltage 2 of Motor 2

Factory Setting: 2.0 / 4.0

Settings 110 V / 230 V series: 0.0 V~240.0 V
460 V series: 0.0 V~480.0 V

01-58	Mid-point Frequency 2 of Motor 3

Factory Setting: 0.50

Settings 0.00~599.00 Hz

01-59	Mid-point Voltage 2 of Motor 3

Factory Setting: 2.0 / 4.0

Settings 110 V / 230 V series: 0.0 V~240.0 V
460 V series: 0.0 V~480.0 V

01-67	Mid-point Frequency 2 of Motor 4

Factory Setting: 0.50

Settings 0.00~599.00 Hz

01-68	Mid-point Voltage 2 of Motor 4

Factory Setting: 2.0 / 4.0

Settings 110 V / 230 V series: 0.0 V~240.0 V
460 V series: 0.0 V~480.0 V

01-07	Min. Output Frequency of Motor 1

Factory Setting: 0.00

Settings 0.00~599.00 Hz

01-08	Min. Output Voltage of Motor 1

Factory Setting: 0.0 / 0.0

Settings 110 V / 230 V series: 0.0 V~240.0 V
460 V series: 0.0 V~480.0 V

01-41	Min. Output Frequency of Motor 2

Factory Setting: 0.00

Settings 0.00~599.00 Hz

01-42	Min. Output Voltage of Motor 2

Factory Setting: 0.0 / 0.0

Settings 110 V / 230 V series: 0.0 V~240.0 V
460 V series: 0.0 V~480.0 V

01-60	Min. Output Frequency of Motor 3

Factory Setting: 0.00

Settings 0.00~599.00 Hz

01-61	Min. Output Voltage of Motor 3

Factory Setting: 0.0 / 0.0

Settings 110 V / 230 V series: 0.0 V~240.0 V
460 V series: 0.0 V~480.0 V

01-69	Min. Output Frequency of Motor 4

Factory Setting: 0.00

Settings 0.00~599.00 Hz

01-70 Min. Output Voltage of Motor 4

Factory Setting: 0.0 / 0.0

Settings 110 V / 230 V series: 0.0 V~240.0 V
460 V series: 0.0 V~480.0 V

- V/F curve setting is usually set by the motor's allowable loading characteristics. If the loading characteristics exceed the loading limit of the motor, must pay more attention to the heat dissipation, dynamic balance, and bearing lubricity of the motor.
- If the voltage is too high at low frequency, it may cause motor damage, overheat, and stall prevention or over-current protection. To prevent motor damage or motor fault, please be careful when setting the voltage.
- Pr. 01-35 ~ Pr. 01-42 is the V/F curve for motor 2. When multi-function input terminals Pr. 02-01 ~ 02-08 and Pr. 02-26 ~ Pr. 02-31 (extension card) are set to 14 and enabled, the AC motor drive will act as the 2nd V/F curve.
- When the high speed mode is on, maximum operation frequency is 0.00~1500.0 Hz.
- The V/F curve for motor 1 is shown as follows. The V/F curve for motor 2 can be deduced from it.

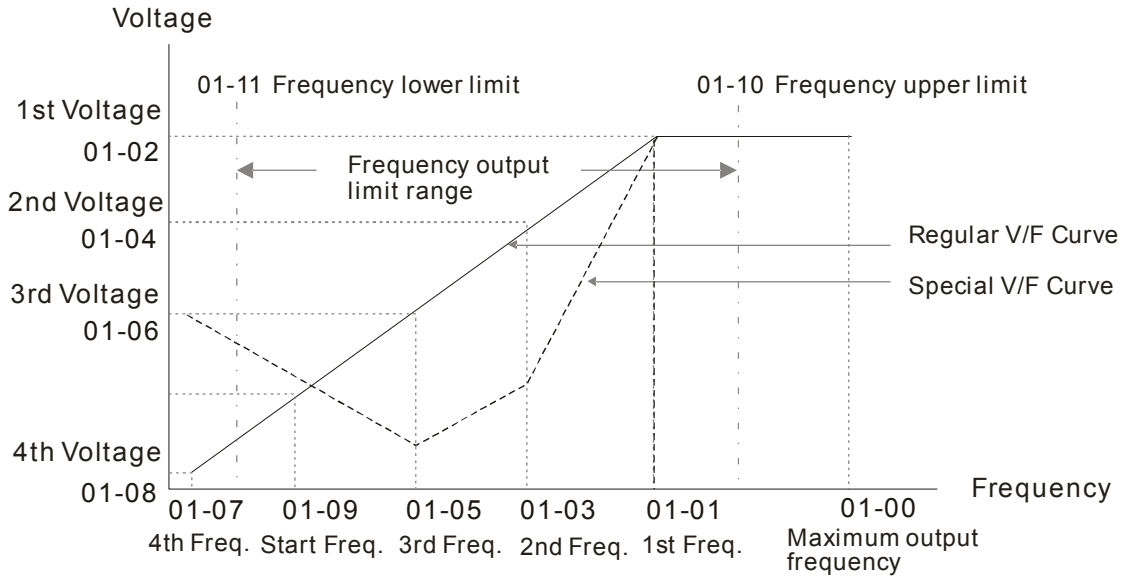

V/F Curve

- Common settings of V/F curve:

(1) General purpose

Motor spec. 60Hz

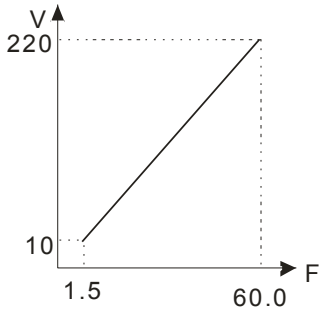

Pr.	Setting
01-00	60.0
01-01	60.0
01-02	220.0
01-03 01-05	1.50
01-04 01-06	10.0
01-07	1.50
01-08	10.0

Motor spec. 50Hz

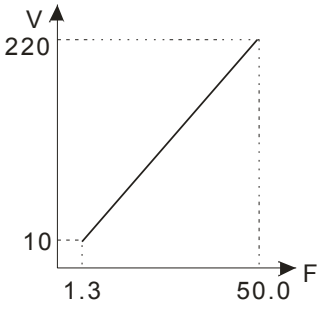

Pr.	Setting
01-00	50.0
01-01	50.0
01-02	220.0
01-03 01-05	1.30
01-04 01-06	10.0
01-07	1.30
01-08	10.0

(2) Fan and hydraulic machinery

Motor spec. 60Hz

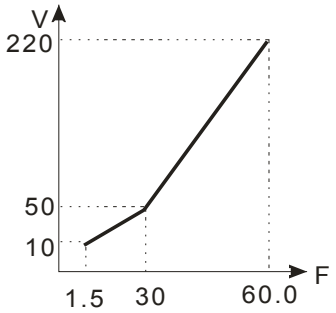

Pr.	Setting
01-00	60.0
01-01	60.0
01-02	220.0
01-03 01-05	30.0
01-04 01-06	50.0
01-07	1.50
01-08	10.0

Motor spec. 50Hz

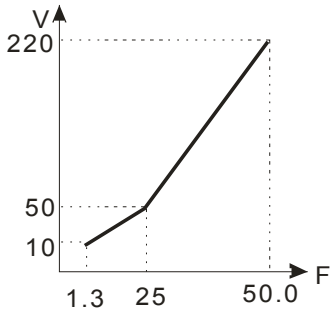

Pr.	Setting
01-00	50.0
01-01	50.0
01-02	220.0
01-03 01-05	25.0
01-04 01-06	50.0
01-07	1.30
01-08	10.0

(3) High starting torque

Motor spec. 60Hz

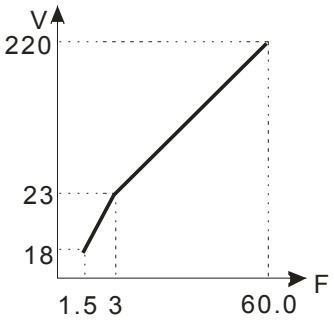

Pr.	Setting
01-00	60.0
01-01	60.0
01-02	220.0
01-03 01-05	3.00
01-04 01-06	23.0
01-07	1.50
01-08	18.0

Motor spec. 50Hz

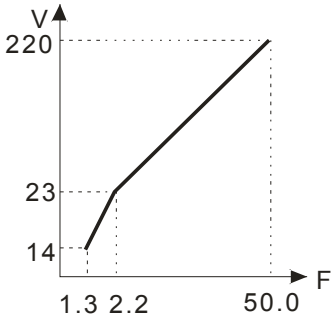

Pr.	Setting
01-00	50.0
01-01	50.0
01-02	220.0
01-03 01-05	2.20
01-04 01-06	23.0
01-07	1.30
01-08	14.0

01-09 Start-up Frequency

Factory Setting: 0.50

Settings 0.00~599.00 Hz

- When start frequency is higher than the min. output frequency, drive's output will be from start frequency to the setting frequency. Please refer to the following diagram for details.
- Fcmd = frequency command;
  Fstart = start frequency (Pr. 01-09);
  fstart = actual start frequency of drive;
  Fmin = 4th output frequency setting (Pr. 01-07 / Pr. 01-41);
  Flow = output frequency lower limit (Pr. 01-11)
- When Fcmd > Fmin and Fcmd < Fstart:
  If Flow < Fcmd, drive will run directly by Fcmd.
  If Flow ≥ Fcmd, drive will run by Fcmd, then rise to Flow according to acceleration time.
- The output frequency will attain directly to 0 when decelerating to Fmin.

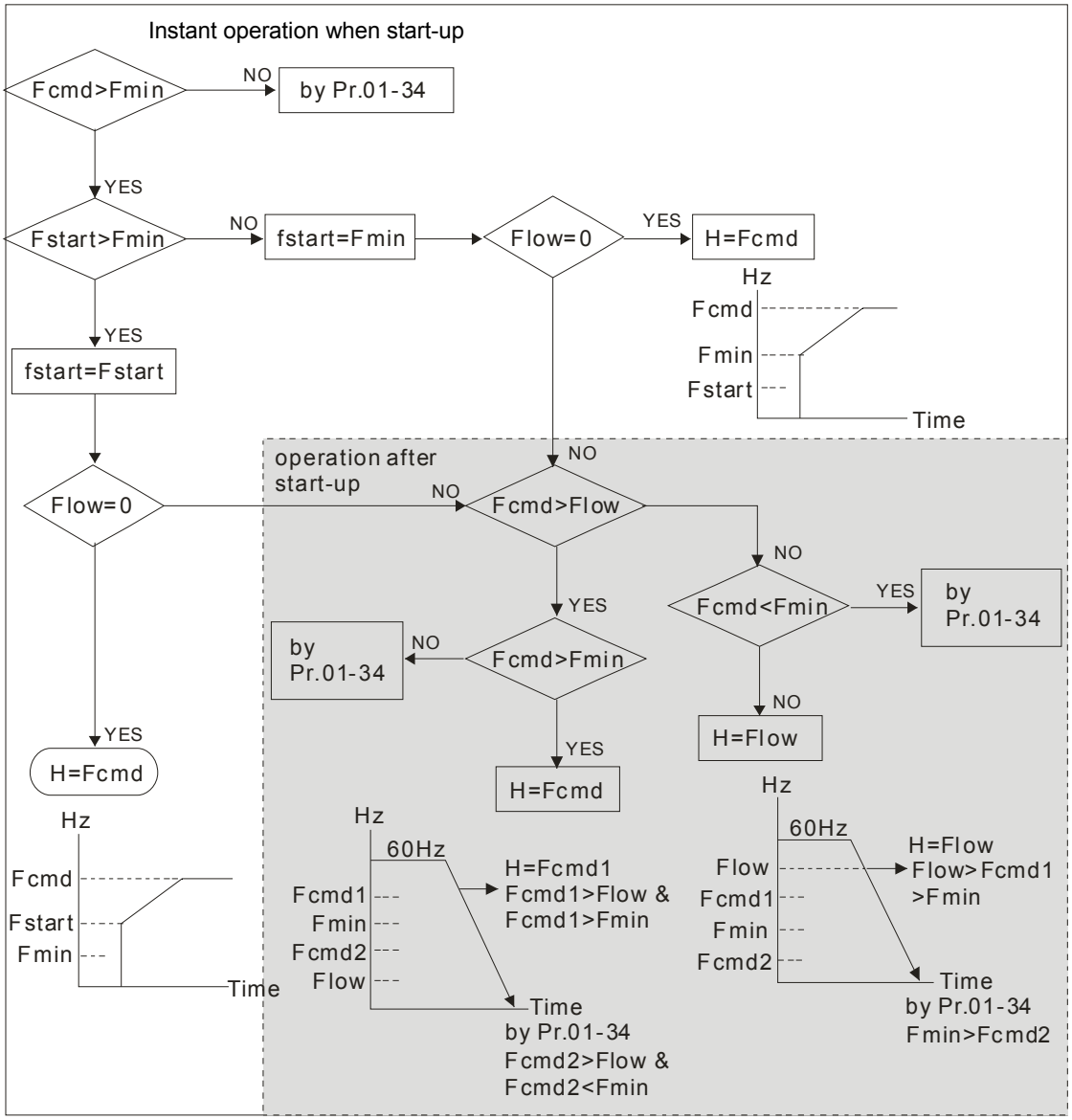

01-10 Output Frequency Upper Limit

Factory Setting: 599.00

Settings 0.00~599.00 Hz

01-11 Output Frequency Lower Limit

Factory Setting: 0.00

Settings 0.00~599.00 Hz

- The upper / lower limit output frequency setting is used to limit the actual output frequency. If the frequency setting is higher than the upper limit (Pr. 01-10), it will run by the upper limit frequency. If output frequency is lower than lower limit (Pr. 01-11) and frequency setting is higher than min. frequency (Pr. 01-07), it will run by lower limit frequency. The upper limit frequency should be set > lower limit frequency. (Pr. 01-10 setting value must be > Pr. 01-11 setting value).
- Upper output frequency will limit the max. output frequency of drive. If frequency setting is higher than Pr. 01-10, the output frequency will be limited by Pr. 01-10 setting.
- When the drive starts the function of slip compensation (Pr. 07-27) or PID feedback control, drive output frequency may exceed frequency command but still be limited by this setting.
- Related parameters: Pr. 01-00 Max. Operation Frequency and Pr.01-11 Output Frequency Lower Limit

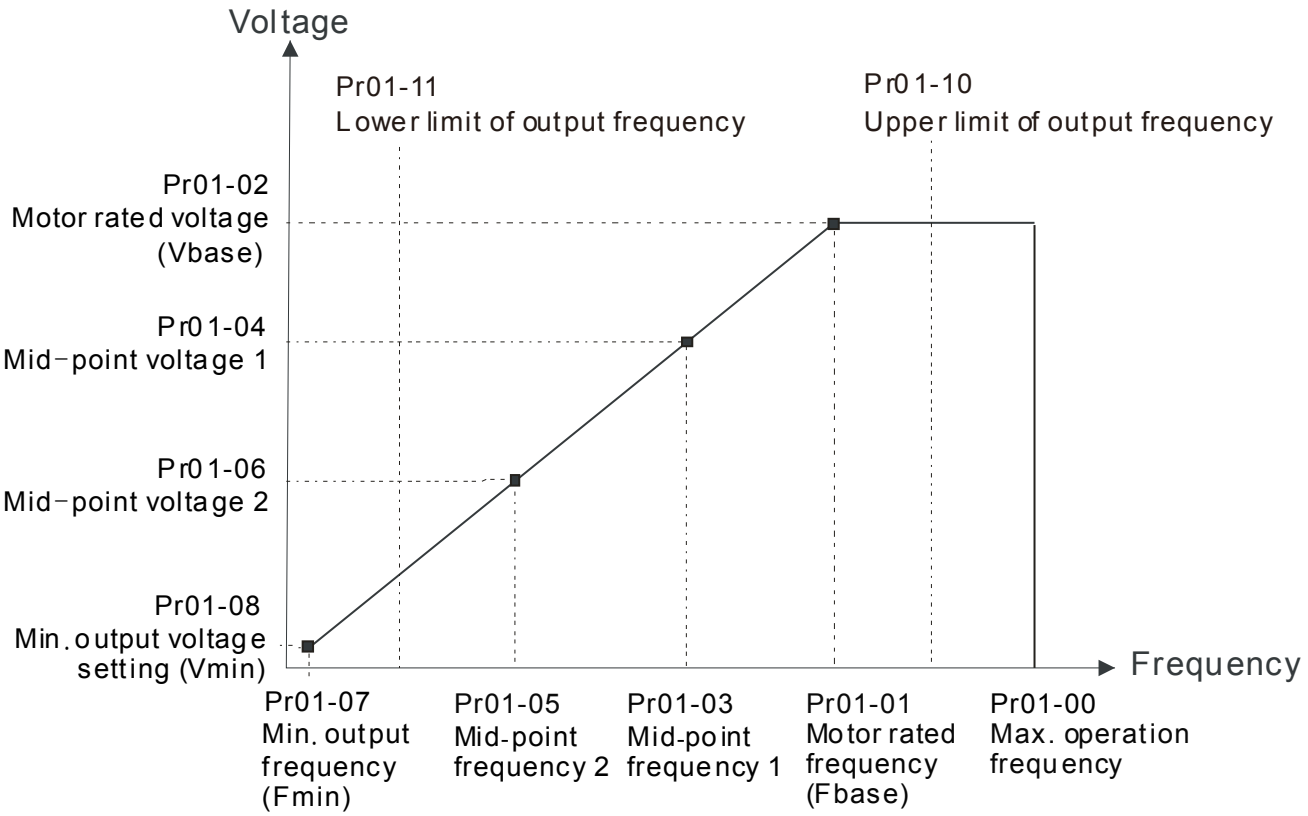

- Lower output frequency will limit the min. output frequency of drive. When drive frequency command is lower than this setting, drive output frequency will be limited by the lower limit of frequency.
- When the drive starts, it will operate from min. output frequency (Pr. 01-07) accelerate to the setting frequency. It will not be limited by lower output frequency setting.
- The setting of output frequency upper / lower limit is used to prevent operator misuse, overheat caused by too low operation frequency or damage caused by excessive speed.
- If the output frequency upper limit setting is 50 Hz and frequency setting is 60 Hz, max. output frequency will be 50 Hz.
- If the output frequency lower limit setting is 10 Hz and min. operation frequency setting (Pr. 01-07) is 1.5 Hz, it will operate by 10 Hz when the frequency command is greater than Pr. 01-07 and less than 10 Hz. If the frequency command is less than Pr. 01-07, the drive will be in ready status with no output.
- If the frequency output upper limit is 60 Hz and frequency setting is also 60 Hz, only frequency command will be limited in 60 Hz. Actual frequency output may exceed 60 Hz if the drive starts the function of slip compensation.
- When the high speed mode is on, maximum operation frequency is 0.00~1500.0 Hz.

01-12	Accel. Time 1
01-13	Decel. Time 1
01-14	Accel. Time 2
01-15	Decel. Time 2
01-16	Accel. Time 3
01-17	Decel. Time 3
01-18	Accel. Time 4
01-19	Decel. Time 4
01-20	JOG Acceleration Time
01-21	JOG Deceleration Time

Factory Setting: 10.00 / 10.0

Settings Pr. 01-45 = 0: 0.00~600.00 sec.
Pr. 01-45 = 1: 0.00~6000.0 sec.

- The acceleration time is used to determine the time required for the AC motor drive to accelerate from 0 Hz to maximum output frequency (Pr. 01-00).
- The acceleration / deceleration time is invalid when using Pr. 01-44 Auto acceleration / deceleration setting.
- The acceleration / deceleration time 1, 2, 3, 4 are selected according to the multi-function input terminals settings. The factory settings are accel. / decel. time 1.
- When enable torque limits and stalls prevention function, the actual accel. / decel. time will be longer than the above action time.
- Please note that it may trigger the protection function (Pr. 06-03 Over-current stall prevention during acceleration or Pr. 06-01 Over-voltage stall prevention) when setting of accel. / decel. time is too short.
- Please note that it may cause motor damage or drive protection enabled due to over current during acceleration when the setting of acceleration time is too short.
- Use suitable brake resistor (please refer to Chapter 07 Optional accessories) to decelerate in a short time and prevent over-voltage.
- When enable Pr. 01-24 ~ Pr. 01-27 (S-curve accel. / decel. begin and arrival time) , the actual accel. / decel. time will be longer than the setting.

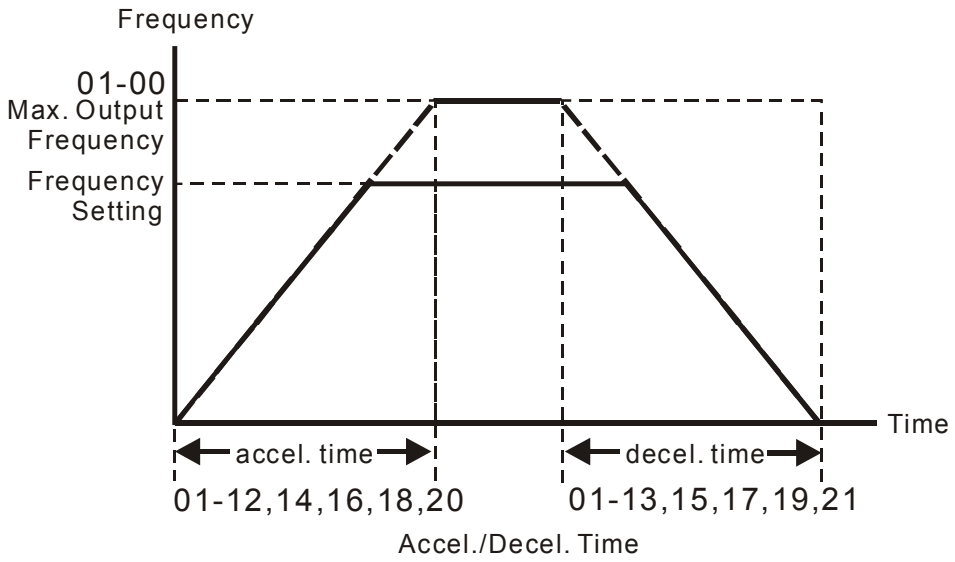

01-22 JOG Frequency

Factory Setting: 6.00

Settings 0.00~599.00 Hz

Both external terminal JOG and key "F1" on the keypad KPC-CC01 (optional) can be used to set JOG function. When the JOG command is ON, the AC motor drive will accelerate from 0 Hz to JOG frequency (Pr. 01-22). When JOG command is OFF, the AC motor drive will decelerate from Jog frequency to stop. The JOG accel. / decel. time (Pr. 01-20, Pr. 01-21) is the time that accelerates from 0.0 Hz to JOG frequency (Pr. 01-22). The JOG command cannot be executed when the AC motor drive is running. In the same way, when the JOG command is executing, other operation commands are invalid.

01-23 1st / 4th Accel. / decel. Frequency

Factory Setting: 0.00

Settings 0.00~599.00 Hz

This function does not require external terminal switching function, it will switch the accel. / decel. time automatically by Pr. 01-23 setting. If the external terminal is set, it will be prior to Pr. 01-23.

When using this function, please set S-curve acceleration time as 0 if 4th acceleration time is set too short.

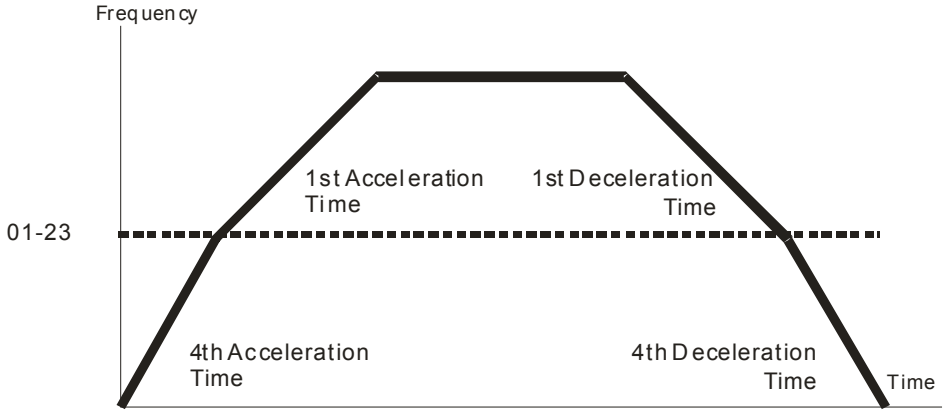

1st/4th Acceleration/Deceleration Frequency Switching

01-24 S-curve Acceleration Begin Time 1
01-25 S-curve Acceleration Arrival Time 2
01-26 S-curve Deceleration Begin Time 1
01-27 S-curve Deceleration Arrival Time 2

Factory Setting: 0.20 / 0.2

Settings Pr. 01-45 = 0: 0.00~25.00 sec.
Pr. 01-45 = 1: 0.0~250.0 sec.

This parameter is used to set slow start when the drive begins to accelerate at start. The accel. / decel. curve can adjust the S-curve accel. / decel by setting parameter value. When it is enabled, the drive will have different accel. / decel. curve by the accel. / decel. time.

The S-curve function is disabled when accel. / decel. time is set to 0.

When Pr. 01-12, 01-14, 01-16, 01-18 ≥ Pr. 01-24 and Pr. 01-25,
the actual accel. time = Pr. 01-12, 01-14, 01-16, 01-18 + (Pr. 01-24 + Pr. 01-25) / 2

When Pr. 01-13, 01-15, 01-17, 01-19 ≥ Pr. 01-26 and Pr. 01-27,
the actual decel. time = Pr. 01-13, 01-15, 01-17, 01-19 + (Pr. 01-26 + Pr. 01-27) / 2

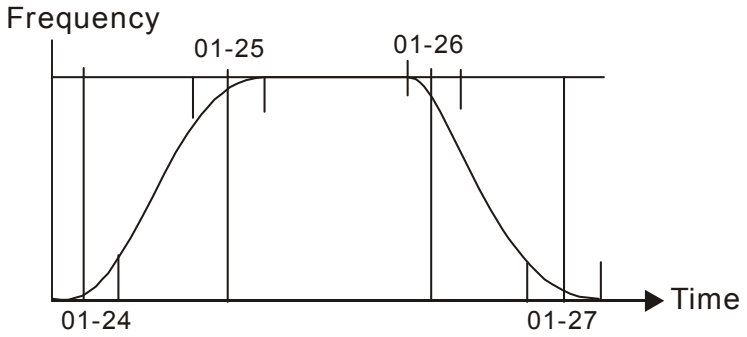

01-28	Skip Frequency 1 (Upper Limit)
01-29	Skip Frequency 1 (Lower Limit)
01-30	Skip Frequency 2 (Upper Limit)
01-31	Skip Frequency 2 (Lower Limit)
01-32	Skip Frequency 3 (Upper Limit)
01-33	Skip Frequency 3 (Lower Limit)

Factory Setting: 0.00

Settings 0.00~599.00 Hz

These parameters are used to set skip frequency of the AC drive. Frequency setting of the drive will skip these frequency ranges. However, the frequency output is continuous. There is no limit for the setting of these six parameters and it can be combined. Pr. 01-28 does not need to be greater than Pr. 01-29; Pr. 01-30 does not need to be greater than
Pr. 01-31; Pr. 01-32 does not need to be greater than Pr. 01-33. Pr. 01-28~01-33 can be set as required. There is no size distinction between these six parameters.

These parameters set skip frequency ranges of the AC drive. This function can be used to prevent the mechanical resonance. The skip frequencies are useful when a motor has vibration at a specific frequency bandwidth. By skipping this frequency, the vibration will be avoided. There are 3 zones offered for use.

Frequency command (F) can be set within the range of skip frequencies. Then the output frequency (H) will be limited to the lower limit of skip frequency ranges.

When accelerating / decelerating, the output frequency will still pass the skip frequency ranges.

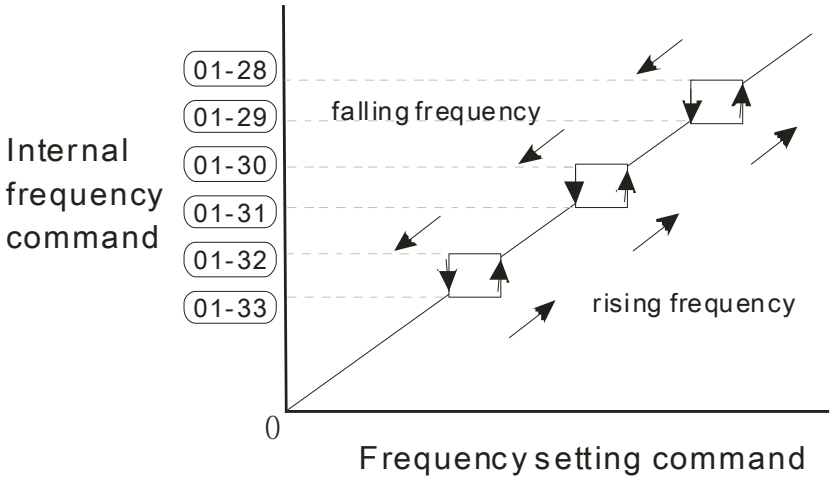

01-34 Zero-speed Mode

Factory Setting: 0

Settings 0: Output waiting
1: Zero-speed operation
2: Fmin (Refer to Pr. 01-07, 01-41)

- When the frequency command of drive is less than Fmin (Pr. 01-07, Pr. 01-41), the drive will operate by this parameter.
- When it is set to 0, the AC motor drive will be in waiting mode without voltage output from terminals U, V, W.
- When it is set to 1, it will execute DC brake by Vmin (Pr. 01-08 and Pr. 01-42) in V/F and SVC modes.
- When it is set to 2, the AC motor drive will run by Fmin (Pr. 01-07, Pr. 01-41) and Vmin (Pr. 01-08, Pr. 01-42) in V/F and SVC modes.
- In V/F, SVC modes:

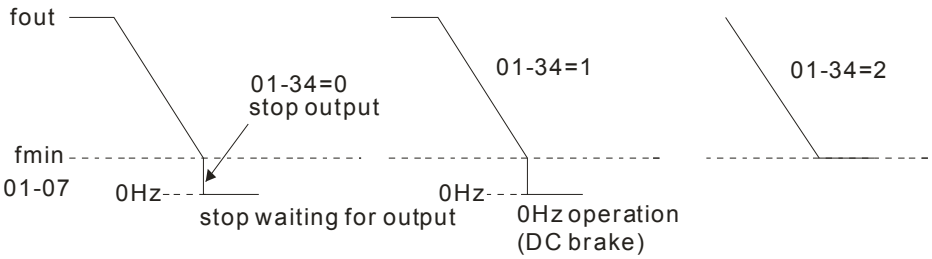

01-43 V/F Curve Selection

Factory Setting: 0

Settings 0: V/F curve determined by Pr. 01-00~01-08
1: 1.5th V/F curve
2: 2nd V/F curve

- When setting to 0, refer to Pr. 01-01~01-08 for motor 1 V/F curve. For motor 2, please refer to Pr. 01-35~01-42.
- When setting to 1 or 2, 2nd and 3rd voltage frequency setting are invalid.
- If motor load is variable torque load (torque is in direct proportion to rotating speed, such as the load of fan or pump), load torque will be low at low rotating speed, decrease input voltage to make magnetic field of input current smaller, which will reduce flux loss and iron loss of the motor to raise the entire efficiency.
- When setting high power of V/F curve, it is lower torque at low frequency, and the drive is not suitable for rapid acceleration / deceleration. It is recommended NOT to use this parameter for the rapid acceleration / deceleration.

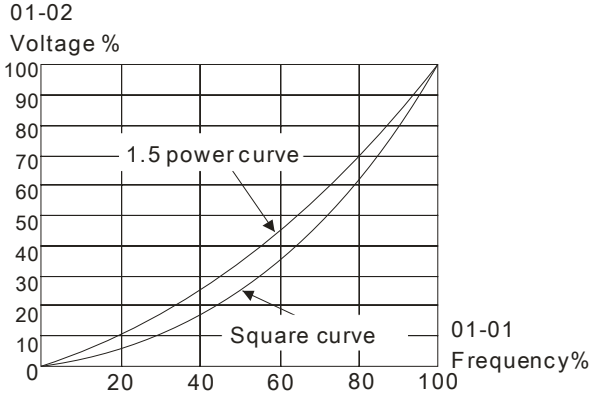

01-44 Auto Acceleration / Deceleration Setting

Factory Setting: 0

Settings 0: Linear accel. / decel.
1: Auto accel., linear decel.
2: Linear accel., auto decel.
3: Auto accel. / decel.
4: Linear, stall prevention by auto accel. / decel. (limited by Pr. 01-12 to 01-21)

- Setting 0 linear accel. / decel. : it will accel. / decel. according to the setting of Pr. 01-12~01-19.
- Setting to auto accel. / decel. : it can reduce the mechanical vibration and prevent the complicated auto-tuning processes. It will not stall during acceleration and no need to use brake resistor. In addition, it can improve the operation efficiency and save energy.
- Setting 3 auto accel. / decel. (Decelerate by actual load): it can auto detect the load torque and accelerate from the fastest acceleration time and smoothest start current to the setting frequency. When decelerating, it can auto detect the load re-generation and stop the motor smoothly with the fastest decel. time.
- Setting 4 stall prevention by auto accel. / decel. (Refer to accel. / decel. time) : if the acceleration / deceleration is in the reasonable range, it will accelerate / decelerate by Pr. 01-12~01-19. If the accel. /decel. time is too short, the actual accel./decel. time is greater than the setting of accel. /decel. time.

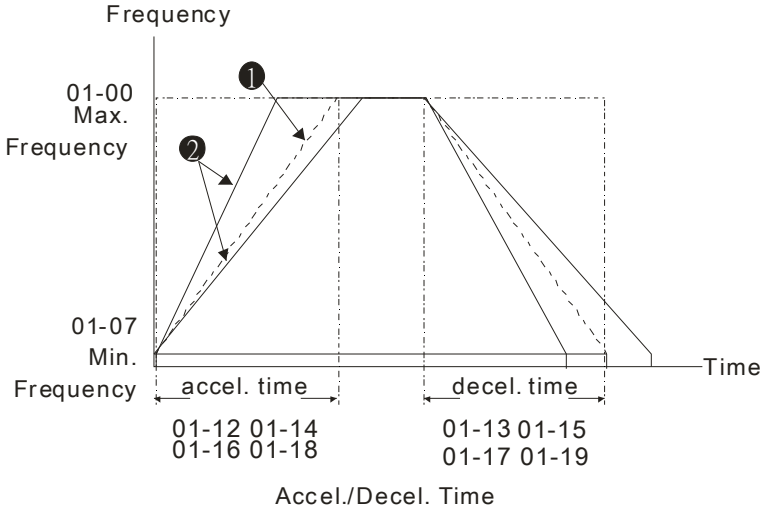

❶ When Pr.01-44 is set to 0.

❷ When Pr.01-44 is set to 3.

01-45 Time Unit for Acceleration / Deceleration and S Curve

Factory Setting: 0

Settings 0: Unit 0.01 sec.
1: Unit 0.1 sec.

01-46 Time for CANopen Quick Stop

Factory Setting: 1.00

Settings Pr. 01-45 = 0: 0.00~600.00 sec.
Pr. 01-45 = 1: 0.0~6000.0 sec.

- It is used to set the time decelerating from maximum operation frequency (Pr. 01-00) to 0.00 Hz by CANopen control.

01-49 Deceleration Method

Factory Setting: 0

Settings	0: Normal decel.
	1: Overfluxing decel.
	2: Traction energy control

- When 0 is set: decelerate or stop in accordance with original decelerating setting.
- When 1 is set: during deceleration, the drive will make control according to the setting of Pr. 06-01 and the voltage recovery size of DC BUS. The controller will start when DC BUS voltage reaches to 95 % of Pr. 06-01. When Pr. 06-01 is set to 0, the drive will make control according to operating voltage and the voltage recovery size of DC BUS. This method will decelerate according to the setting value of deceleration time. The fastest actual deceleration time will not be less than the setting of deceleration time.
- The actual deceleration time of motor is more than the setting of deceleration time due to overvoltage stall prevention operation.
- When 1 is set: can be used with Pr. 06-02 set to 1 to get a better effect of deceleration over-voltage suppression.
- When 2 is set: this function can auto tuning output frequency and output voltage to accelerate consuming DC BUS energy according to the ability of the drive. So that the actual deceleration time can comply with the parameter setting as possible. This setting is recommended when overvoltage occurs due to use the deceleration time which is not as expected.

02 Digital Input / Output Parameter

✎ This parameter can be set during operation.

02-00 2-wire / 3-wire Operation Control

Factory Setting: 1

Settings
0: No function
1: 2-wire mode 1, power on for operation control
(M1: FWD / STOP, M2: REV / STOP)
2: 2-wire mode 2, power on for operation control
(M1: RUN / STOP, M2: REV / FWD)
3: 3-wire, power on for operation control
(M1: RUN, M2: REV / FWD, M3: STOP)
4: 2-wire mode 1, fast start up
(M1: FWD / STOP, M2: REV / STOP)
5: 2-wire mode 2, fast start up
(M1: RUN / STOP, M2: REV / FWD)
6: 3-wire，fast start up
(M1: RUN, M2: REV / FWD, M3: STOP)

IMPORTANT

1. In fast start up function, terminal output will keep in ready status, drive will response to the command immediately.
2. When using fast start up function, the output terminal will have higher voltage potentially.

📖 In Quick Start function, the output will remain ready for operation. The drive will respond to start command immediately.

📖 When using Quick Start function, there will be greater potential voltage on the output terminals.

📖 This parameter is for setting the configuration of external drive operation control, plus Quick Start function, there are six different control modes:

Pr. 02-00	Control Circuits of the External Terminal
Setting value: 1 2-wire FWD / STOP REV / STOP	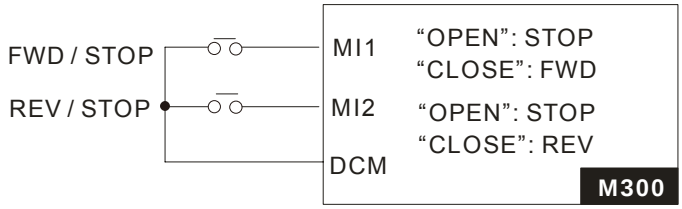
Setting value: 2 2-wire RUN / STOP REV / FWD	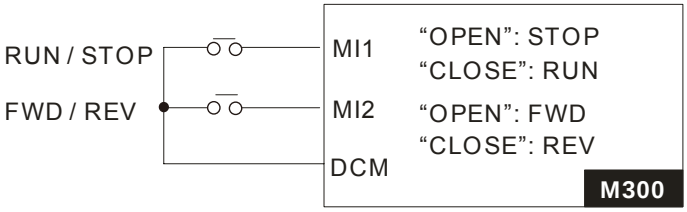

Setting value: 3 3-wire	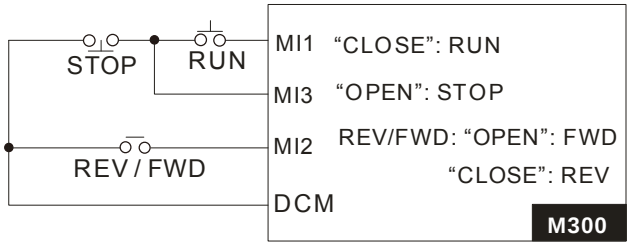
Setting value: 4 2-wire Quick Start	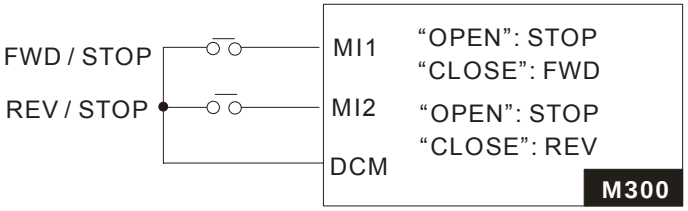
Setting value: 5 2-wire Quick Start	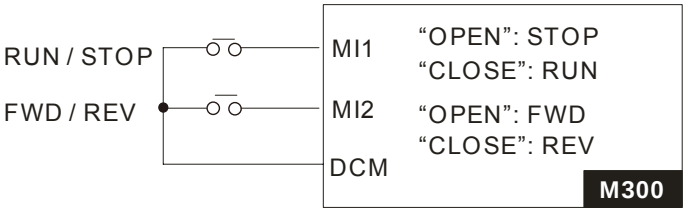
Setting value: 6 3-wire Quick Start	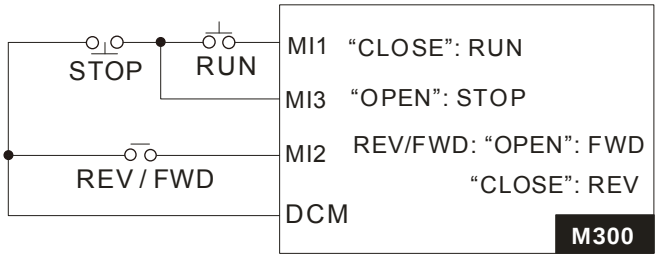

02-01	Multi-function Input Command 1 (MI1)
02-02	Multi-function Input Command 2 (MI2)
02-07	Multi-function Input Command 7 (MI7)
	Factory Setting: 0
02-03	Multi-function Input Command 3 (MI3)
	Factory Setting: 1
02-04	Multi-function Input Command 4 (MI4)
	Factory Setting: 2
02-05	Multi-function Input Command 5 (MI5)
	Factory Setting: 3
02-06	Multi-function Input Command 6 (MI6)
	Factory Setting: 4

Settings 0: No function

1: Multi-stage speed command 1 / multi-stage position command 1

2: Multi-stage speed command 2 / multi-stage position command 2

3: Multi-stage speed command 3 / multi-stage position command 3

4: Multi-stage speed command 4 / multi-stage position command 4

5: Reset

6: JOG operation (By KPC-CC01 or external control)
7: Acceleration / deceleration speed not allow
8: The 1st, 2nd acceleration / deceleration time selection
9: The 3rd, 4th acceleration / deceleration time selection
10: EF input (Pr. 07-20)
11: B.B input from external (Base Block)
12: Output stop
13: Cancel the setting of the auto acceleration / deceleration time
15: Rotating speed command from AVI
16: Rotating speed command from ACI
18: Forced to stop (Pr. 07-20)
19: Digital up command
20: Digital down command
21: PID function disabled
22: Clear counter
23: Input the counter value (MI6)
24: FWD JOG command
25: REV JOG command
28: Emergency stop (EF1)
29: Signal confirmation for Y-connection
30: Signal confirmation for Δ-connection
38: Disable write EEPROM function
40: Force coast to stop
41: HAND switch
42: AUTO switch
48: Mechanical gear ratio switch
49: Drive enable
50: Master dEb input
51: Selection for PLC mode bit 0
52: Selection for PLC mode bit 1
53: Trigger CANopen quick stop
56: Local / Remote Selection
70: Auxiliary frequency is forced to 0
71: Disable PID function, PID output is forced to 0
72: Disable PID function, remain the output value before disabled
73: PID integral gain is forced to 0, integral disabled
74: PID feedback reversed
81: Zero point position signal input of simple positioning
82: OOB loading balance detection
83: Multi-motors (IM) selection bit 0
84: Multi-motors (IM) selection bit 1

- This parameter selects the functions for each multi-function terminal.
- When Pr. 02-00 = 0, multi-function options can be set by multi-function input terminal MI1, MI2.
- When Pr. 02-00 ≠ 0, specify the use of multi-function input terminals MI1, MI2 with reference to the setting value of Pr. 02-00.

  Example:

  If Pr. 02-00 = 1: multi-function input terminal MI1 = FWD / STOP,
  multi-function input terminal MI2 = REV / STOP.

  If Pr. 02-00 = 2: multi-function input terminal MI1 = RUN / STOP,
  multi-function input terminal MI2 = FWD / REV.
- When multi-function input terminal MI7 = 0, MI7 is designated as pulse input terminal.
- If Pr. 02-00 is set to 3-wire operation control, terminal MI3 is for STOP contact. The function set will be invalid automatically.

Summary of function settings

(Take the N.O. normally opened contact for example, ON: contact is closed, OFF: contact is open)

Settings	Functions	Descriptions
0	No Function	
1	Multi-stage speed command 1 / multi-stage position command 1	15-stages speed or 15 positions could be set by the digital status of these 4 terminals. 16-steps speed could be operate if the master speed is included when setting as 15 steps speed. (Refer to Parameter 04)
2	Multi-stage speed command 2 / multi-stage position command 2multi-stage	
3	Multi-stage speed command 3 / multi-stage position command 3	
4	Multi-stage speed command 4 / multi-stage position command 4	
5	Reset	Use this terminal to reset the drive after the error of the drive is eliminated.
6	JOG operation KPC-CC01 required (optional)	This function is valid when the source of operation command is external terminals. The JOG operation executes when the drive stops completely. During running, the operation direction can be changed, and STOP key on the keypad is valid. Once the external terminal receives OFF command, the motor will stop by the JOG deceleration time. Refer to Pr. 01-20~01-22 for details. 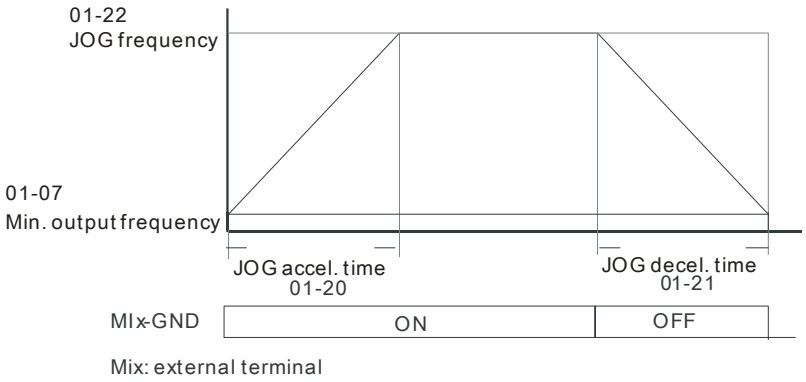

Settings	Functions	Descriptions
7	Acceleration / deceleration speed inhibit	When this function is enabled, the drive will stop acceleration and deceleration immediately. After this function is disabled, the AC motor drive starts to accel. / decel. from the inhibit point. 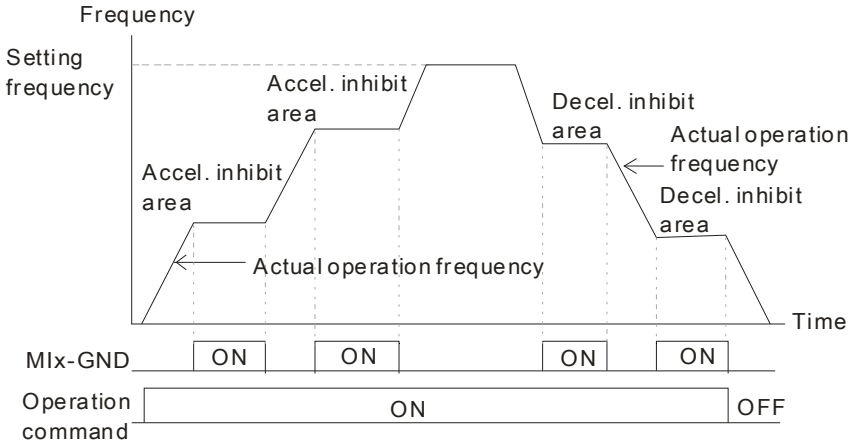
8	The 1st, 2nd acceleration / deceleration time selection	The acceleration / deceleration time of the drive can be selected from this function or the digital status of terminals; there are 4 acceleration / deceleration for selection.
9	The 3rd, 4th acceleration / deceleration time selection	
10	EF input (EF: External fault)	For external fault input. The drive will decelerate by Pr. 07-20 setting, and keypad will show EF. (It will have fault record when external fault occurs). The drive will keep running until the fault is cleared (terminal status restored) after RESET.
11	B.B input from external (B.B.: Base Block)	When the contact of this function is ON, output of the drive will stop immediately. The motor will be in free run and keypad will display B.B. signal. Refer to Pr. 07-08 for details.
12	Output stop (Output pause)	When the contact of this function is ON, output of the drive will stop immediately. The motor will be in free run. The drive is in output waiting status until the switch turned to OFF, the drive will re-start to current setting frequency. 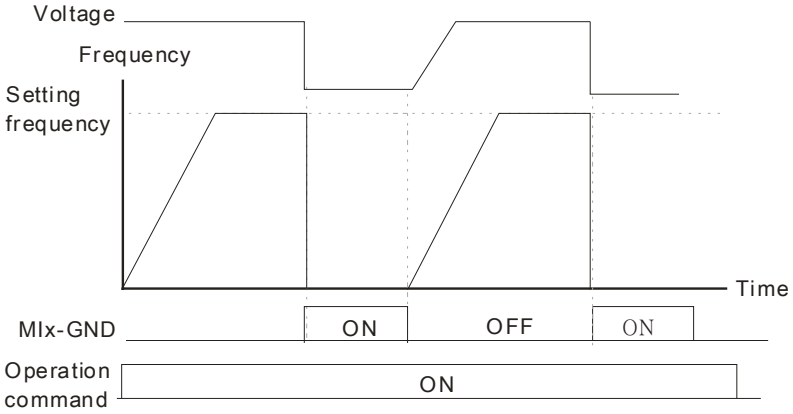

Settings	Functions	Descriptions
13	Cancel the setting of the auto accel. / decel. time	Pr. 01-44 should be set to one of 01~04 modes before using this function. When this function is enabled, OFF is for auto mode and ON is for linear accel. / decel.
15	Rotating speed command form AVI	When the contact of this function is ON, the source of the frequency will force to be AVI. (If the rotating speed commands are set to AVI, ACI at the same time, the priority is AVI > ACI)
16	Rotating speed command form ACI	When the contact of this function is ON, the source of the frequency will force to be ACI. (If the rotating speed commands are set to AVI, ACI at the same time, the priority is AVI > ACI)
18	Forced to stop	When the contact of this function is ON, the drive will ramp to stop by Pr. 07-20 setting.
19	Digital up command	When the contact of this function is ON, the frequency of drive will increase or decrease by one unit. If this function remains ON continuously, the frequency will increase / decrease by Pr. 02-09 / Pr. 02-10. The frequency command returns to zero when the drive stops, and the displayed frequency is 0.00 Hz. Select Pr. 11-00, bit 7 = 1, frequency is not saved.
20	Digital down command	
21	PID function disabled	When the contact of this function is ON, the PID function is disabled.
22	Clear counter command	When the contact of this function is ON, current counter value will be cleared and display “0”. Only when this function is disabled, the drive will keep counting upward.
23	Input the counter value (MI 6)	The counter value will increase 1 once the contact of this function is ON. The function needs to be set with Pr. 02-19.
24	FWD JOG command	This function is valid when the source of operation command is external terminals. When the contact of this function is ON, the drive will execute forward JOG. When execute JOG command in torque mode, the drive will automatically switch to speed mode. The drive will return to torque mode after JOG command is done.
25	REV JOG command	This function is valid when the source of operation command is external terminals. When the contact of this function is ON the drive will execute reverse JOG. When execute JOG command in torque mode, the drive will automatically switch to speed mode. The drive will return to torque mode after JOG command is done.

<table>
<tr><th>Settings</th><th>Functions</th><th>Descriptions</th></tr>
<tr><td>28</td><td>Emergency stop (EF1)</td><td>When the contact of this function is ON: output of the drive will stop immediately, and display EF1 on the keypad. The motor will be in free run. The drive will keep running until the fault is cleared after pressing “RESET”. (EF: External Fault)
 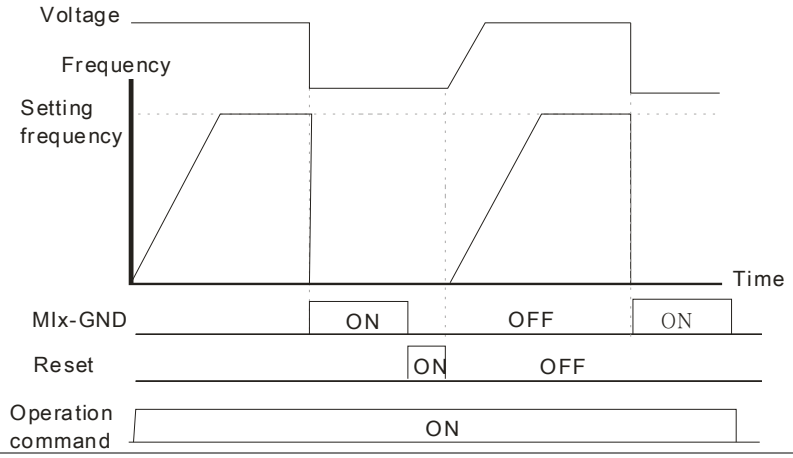
</td></tr>
<tr><td>29</td><td>Signal confirmation for Y-connection</td><td>When the control mode is V/F. If the contact of this function is ON, the drive will operate by 1st V/F.</td></tr>
<tr><td>30</td><td>Signal confirmation for Δ-connection</td><td>When the control mode is V/F. If the contact of this function is ON, the drive will operate by 2nd V/F.</td></tr>
<tr><td>38</td><td>Disable EEPROM write function (Parameters memory disable)</td><td>When the contact of this function is ON, the write of EEPROM is disabled. (Changed parameters will not be saved after power off)</td></tr>
<tr><td>40</td><td>Force coast to stop</td><td>When the contact of this function is ON during the operation, the drive will free run to stop.</td></tr>
<tr><td>41</td><td>HAND switch</td><td rowspan="2">☑ When MI terminal is switched to OFF status, it executes a STOP command. Therefore, if MI terminal is switched to OFF during operation, the drive will also stop.
☑ Using keypad KPC-CC01 (optional) to switch between HAND / AUTO, the drive will stop first then switch to the HAND or AUTO status.
☑ The digital keypad KPC-CC01 (optional) will display current status of drive (HAND / OFF / AUTO).
<table>
<tr><th></th><th>bit 1</th><th>bit 0</th></tr>
<tr><td>OFF</td><td>0</td><td>0</td></tr>
<tr><td>AUTO</td><td>0</td><td>1</td></tr>
<tr><td>HAND</td><td>1</td><td>0</td></tr>
<tr><td>OFF</td><td></td><td>1</td></tr>
</table></td></tr>
<tr><td>42</td><td>AUTO switch</td></tr>
<tr><td>48</td><td>Mechanical gear ratio switch</td><td>When this contact is ON, the mechanical gear ratio will switch to the second group. (Refer to Pr. 10-04 ~ Pr. 10-07).</td></tr>
<tr><td>49</td><td>Drive enable</td><td>When drive is enabled, RUN command is valid.
When drive is disabled, RUN command is invalid.
When drive is operating, motor will coast to stop.
This function will interact with MO = 45</td></tr>
</table>

<table>
<tr><th>Settings</th><th>Functions</th><th>Descriptions</th></tr>
<tr><td>50</td><td>Master dEb input</td><td>Input the message setting in this parameter when dEb occurs to Master. This will ensure that dEb also occurs to Slave, then Master and Slave will stop simultaneously.</td></tr>
<tr><td>51</td><td>Selection for PLC mode (bit 0)</td><td rowspan="2">
<table>
<tr><td>PLC status</td><td>bit 1</td><td>bit 0</td></tr>
<tr><td>Disable PLC function (PLC 0)</td><td>0</td><td>0</td></tr>
<tr><td>Trigger PLC to operate (PLC 1)</td><td>0</td><td>1</td></tr>
<tr><td>Trigger PLC to stop (PLC 2)</td><td>1</td><td></td></tr>
<tr><td>No function</td><td>1</td><td>1</td></tr>
</table>
</td></tr>
<tr><td>52</td><td>Selection for PLC mode (bit 1)</td></tr>
<tr><td>53</td><td>Trigger CANopen quick stop</td><td>When this function is enabled under CANopen control, it will change to quick stop. Refer to Chapter 15 for more details.</td></tr>
<tr><td>56</td><td>LOCAL / REMOTE selection</td><td>Use Pr. 00-29 to select LOCAL / REMOTE mode (refer to Pr. 00-29).
When Pr. 00-29 is not set to 0, the digital keypad KPC-CC01 (optional) will display the status of LOC / REM.
<table>
<tr><td></td><td>bit 0</td></tr>
<tr><td>REM</td><td>0</td></tr>
<tr><td>LOC</td><td>1</td></tr>
</table>
</td></tr>
<tr><td>70</td><td>Auxiliary frequency is forced to 0</td><td>Auxiliary frequency will be forced to return 0 when using this function; PID will keep operating if PID is master frequency. (When Pr. 00-35 ≠ 0, master frequency is enabled, selecting this function valid by terminal to force closing the auxiliary frequency = 0)</td></tr>
<tr><td>71</td><td>Disable PID function, PID output is forced to 0</td><td>When master and auxiliary frequency are enabled and using PID function, PID will not operate if setting terminal contact of this parameter ON, integral value return to zero, and PID output is forced to zero.</td></tr>
<tr><td>72</td><td>Disable PID function, remain the output value before disabled</td><td>Master and auxiliary frequency are enabled and using PID function, PID will not operate if setting terminal contact of this parameter ON. Output value can be maintained at the value before PID is disabled.</td></tr>
<tr><td>73</td><td>PID integral gain is forced to 0, integral disabled</td><td>When setting terminal contact of this parameter ON, PID continues to operate, integral control is disabled, and integral value return to zero.</td></tr>
<tr><td>74</td><td>PID feedback reversed</td><td>When setting terminal contact of this parameter ON, PID negative feedback will become positive feedback; PID positive feedback will become negative feedback.</td></tr>
<tr><td>81</td><td>Zero point position signal input of simple positioning</td><td>Use this function as trigger terminal for simple positioning with Pr. 01.20~01.25. This function is for simple positioning, positioning accuracy should be evaluated by the user. Refer to Pr. 01-25 for more details.</td></tr>
</table>

Settings	Functions	Descriptions
82	OOB loading balance detection	OOB (Out Of Balance Detection) function can be used with PLC program in washing machine system. When the contact of this function is ON, receiving Δθ value by Pr. 07-46 and Pr. 07-47. PLC or higher level controller will decide the operation speed of motor according to this Δθ value.
83	Multi-motors (IM) selection bit 0	When the contact of this function is ON, parameters can be changed (Pr. 01.01~01.06, Pr. 01.26~01.43, Pr. 07.18~07.38, Pr. 07.00~07.06) Example: MI1 = 27, MI2 = 28 When MI1 OFF, MI2 OFF: motor 1 MI1 ON, MI2 OFF: motor 2 MI1 OFF, MI2 ON: motor 3 MI1 ON, MI1 ON: motor 4
84	Multi-motors (IM) selection bit 1	

02-09 UP / DOWN Key Mode

Factory Setting: 0

Settings 0: UP / DOWN by the accel. / decel. time
1: UP / DOWN constant speed (Pr. 02-10)
2: Pulse signal (Pr. 02-10)
3: External terminals UP / DOWN key mode

02-10 Constant Speed. the Accel. / Decel. Speed of the UP / DOWN Key

Factory Setting: 0.001

Settings 0.001~1.000 Hz / ms

- These settings are used when multi-function input terminals are set to 19, 20 (UP / DOWN Command). The frequency increases / decreases according to Pr. 02-09 and Pr. 02-10.
- Pr. 11-00 bit 7 = 1, frequency is not saved. The frequency command returns to zero when the drive stops, and the displayed frequency is 0.00 Hz. The frequency increases / decreases command by using UP / DOWN key is valid only when the drive is running.
- When Pr. 02-09 set to 0: increasing / decreasing frequency command (F) according to the setting of acceleration / deceleration (Refer to Pr. 01-12~01-19)

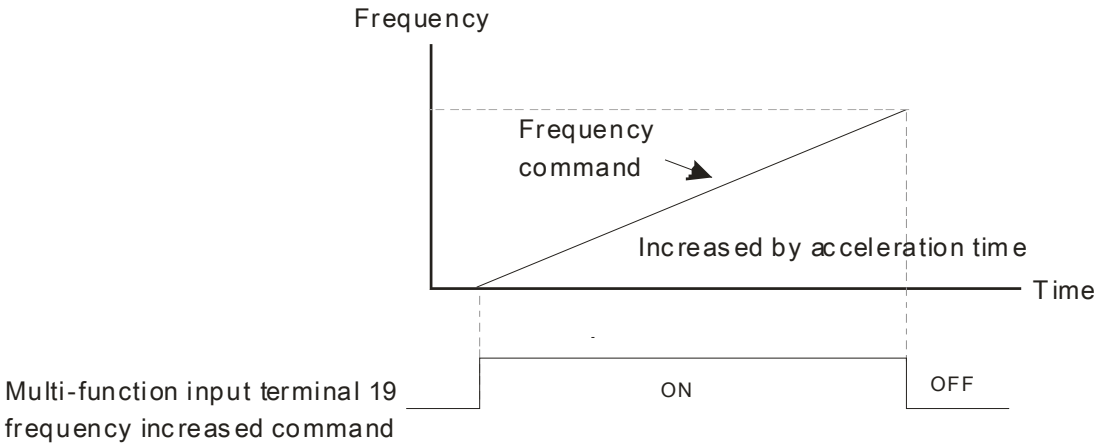

12.1-02-9

- When Pr. 02-09 set to 1: increasing / decreasing frequency command (F) according to the setting of Pr. 02-10 (0.01~1.00 Hz/ms).

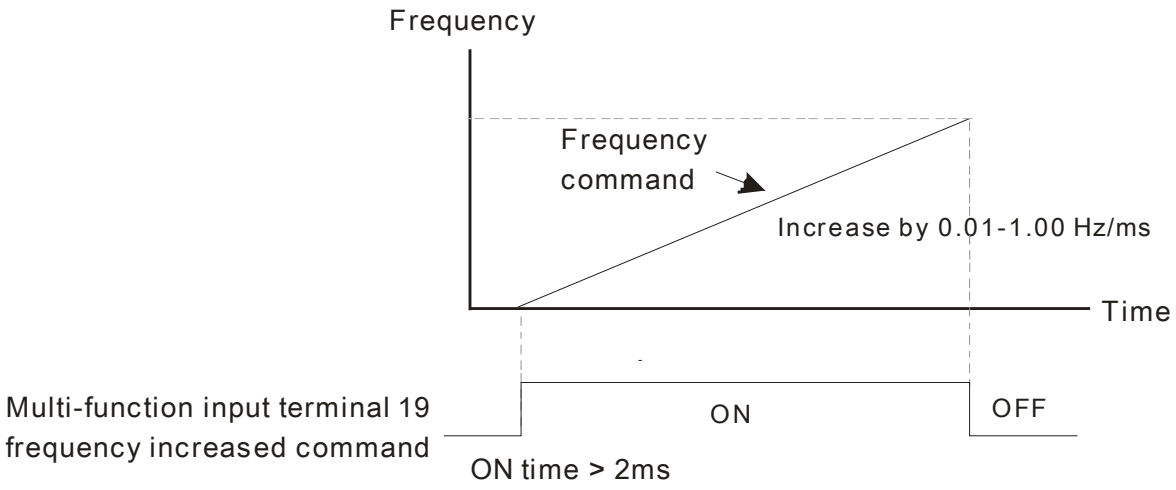

02-11 Multi-function Input Response Time

Factory Setting: 0.005

Settings 0.000~30.000 sec.

- This parameter is used to set the response time of digital input terminals MI1~MI7.
- This function is used for digital input terminal signal delay and confirmation. The delay time is confirmation time to prevent some uncertain interference that would cause error in the input of the digital terminals. Under this condition, confirmation for this parameter would improve effectively, but the response time will be delayed.

02-12 Multi-function Input Mode Selection

Factory Setting: 0000

Settings 0000h~FFFFh (0: N.O.; 1: N.C.)

- The setting of this parameter is in hexadecimal.
- This parameter is to set the status of multi-function input signal (0: Normal Open；1: Normal Close) and it is not affected by the status of SINK / SOURCE.
- bit 0 ~ bit 6 correspond to MI1 ~ MI7 respectively.
- bit 0 (MI1) default is FWD terminal, bit 1 (MI2) default is REV terminal. This parameter cannot be used to change input mode when Pr. 02-00 ≠ 0.
- User can change terminal ON / OFF status by communicating.
  For example: MI3 is set to 1 (multi-stage speed command 1), MI4 is set to 2 (multi-stage speed command 2). Then the forward + 2nd stage speed command = $1001_2 = 9_{10}$
  As long as Pr. 02-12 = 9 be set by communication, there is no need to make wiring of any multi-function terminal to run forward with 2nd stage speed.

bit 6	bit 5	bit 4	bit 3	bit 2	bit 1	bit 0
MI7	MI6	MI5	MI4	MI3	MI2	MI1

- Use Pr. 11-42 bit 1 to select whether FWD / REV terminal is controlled by Pr. 02-12 bit 0 and bit 1.

02-13 Multi-function Output 1 (Relay1)

Factory Setting: 11

02-16 Multi-function Output 2 (MO1)

02-17 Multi-function Output 3 (MO2)

Factory Setting: 0

Settings
0: No function
1: Operation indication
2: Operation speed attained
3: Desired frequency attained 1 (Pr. 02-22)
4: Desired frequency attained 2 (Pr. 02-24)
5: Zero speed (Frequency command)
6: Zero speed, include STOP (Frequency command)
7: Over torque 1 (Pr. 06-06~06-08)
8: Over torque 2 (Pr. 06-09~06-11)
9: Drive is ready
10: Low voltage warning (LV) (Pr. 06-00)
11: Malfunction indication
13: Overheat warning (Pr. 06-15)
14: Software brake signal indication (Pr. 07-00)
15: PID feedback error
16: Slip error (oSL)
17: Count value attained (Pr. 02-20; not return to 0)
18: Count value attained (Pr. 02-19; returns to 0)
19: External interrupt B.B. input (Base Block)
20: Warning output
21: Over voltage warning
22: Over-current stall prevention warning
23: Over-voltage stall prevention warning
24: Operation source
25: Forward command
26: Reverse command
29: Output when frequency ≧ Pr.02-34 (≧ 02-34)
30: Output when frequency < Pr.02-34 (< 02-34)
31: Y-connection for the motor coil
32: △-connection for the motor coil
33: Zero speed (actual output frequency)
34: Zero speed include stop (actual output frequency)
35: Error output selection 1 (Pr. 06-23)
36: Error output selection 2 (Pr. 06-24)
37: Error output selection 3 (Pr. 06-25)
38: Error output selection 4 (Pr. 06-26)

40: Speed attained (including Stop)
42: Crane function
43: Motor actual speed output < Pr. 02-47
44: Low current output (Pr. 06-71 to Pr. 06-73)
45: UVW magnetic contactor ON / OFF switch
46: Master dEb signal output
50: Output for CANopen control
52: Output for communication card control
66: SO output logic A
67: Analog input level reached output
68: SO output logic B
73: Over torque 3
74: Over torque 4

📖 This parameter is used to set the function of multi-function terminals.

Summary of function settings
(Take N.O. normally open contact for example, ON: contact is closed)

Settings	Functions	Descriptions
0	No Function	Output terminal with no function
1	Indication during RUN	Active when the drive is not at STOP.
2	Operating speed attained	Active when output frequency of drive reaches to the setting frequency.
3	Desired frequency attained 1 (Pr. 02-22)	Active when the desired frequency (Pr. 02-22) is attained.
4	Desired frequency attained 2 (Pr. 02-24)	Active when the desired frequency (Pr. 02-24) is attained.
5	Zero speed (frequency command)	Active when frequency command = 0. (the drive must be at RUN status)
6	Zero speed, include STOP (frequency command)	Active when frequency command = 0 or stops.
7	Over torque 1	Active when the drive detects over-torque. Pr. 06-07 is for setting the over-torque detection level (motor 1), and Pr. 06-08 is for setting over-torque detection time (motor 1). Refer to Pr. 06-06~06-08.
8	Over torque 2	Active when the drive detects over-torque. Pr. 06-10 is for setting the over-torque detection level (motor 2), and Pr. 06-11 is for setting over-torque detection time (motor 2). Refer to Pr. 06-09~06-11.
9	Drive is ready	Active when the drive is ON with no abnormality detected.
10	Low voltage warn (LV)	Active when the DC Bus voltage is too low. (refer to Pr. 06-00 low voltage level)

Settings	Functions	Descriptions
11	Malfunction indication	Active when fault occurs (except Lv stop).
13	Overheat	Active when IGBT or heat sink overheats to prevent OH turn off the drive. (refer to Pr. 06-15)
14	Software brake signal indication	Active when the soft brake function is ON. (refer to Pr. 07-00)
15	PID feedback error	Active when the PID feedback signal error is detected.
16	Slip error (oSL)	Active when the slip error is detected.
17	Count value attained (Pr. 02-20)	When the drive executes external counter, this contact will active if the count value is equal to the setting value of Pr. 02-20. This contact will not active when the setting value of Pr. 02-20 > Pr. 02-19.
18	Count value attained (Pr. 02-19)	When the drive executes external counter, this contact will active if the count value is equal to the setting value of Pr. 02-19.
19	External interrupt B.B. input (Base Block)	Active when external interrupt (B.B.) stop output occurs in the drive.
20	Warning output	Active when the warning is detected.
21	Over-voltage warning	Active when the over-voltage is detected.
22	Over-current stall prevention warning	Active when the over-current stall prevention is detected.
23	Over-voltage stall prevention warning	Active when the over-voltage stall prevention is detected.
24	Operation source	Active when the source of operation command is controlled by digital keypad. (Pr. 00-21 = 0)
25	Forward command	Active when the operation direction is forward.
26	Reverse command	Active when the operation direction is reverse.
29	Output when frequency ≥ Pr. 02-34	Active when frequency is ≥ Pr. 02-34. (Actual output H ≥ Pr. 02-34)
30	Output when frequency < Pr. 02-34	Active when frequency is < Pr. 02-34. (Actual output H < Pr. 02-34)
31	Y-connection for the motor coil	Active when Pr. 05-24 = 1, frequency output is lower than Pr. 05-23 minus 2 Hz, and time is longer than Pr. 05-25.
32	△-connection for the motor coil	Active when Pr. 05-24 = 1, frequency output is higher than Pr. 05-23 plus 2 Hz, , and time is longer than Pr. 05-25.
33	Zero speed (actual output frequency)	Active when the actual output frequency is 0. (the drive should be in RUN mode)
34	Zero speed include stop (actual output frequency)	Active when the actual output frequency is 0 or stop.
35	Error output selection 1 (Pr. 06-23)	Active when Pr. 06-23 is ON.

Settings	Functions	Descriptions
36	Error output selection 2 (Pr. 06-24)	Active when Pr. 06-24 is ON.
37	Error Output Selection 3 (Pr. 06-25)	Active when Pr. 06-25 is ON.
38	Error Output Selection 4 (Pr. 06-26)	Active when Pr. 06-26 is ON.
40	Speed attained (including Stop)	Active when the output frequency attains to setting frequency or stop.
42	Crane function	This function should be used with Pr. 02-32, Pr. 02-33, Pr. 02-34, Pr. 02-57 and Pr. 02-58. Active when setting Pr. 07-16 = Pr.02-34, Fcmd > Pr. 02-34, output current > Pr. 02-33 and time > Pr. 02-32; multi-function output setting = 42 crane function. The example of the crane application is as follows for your reference.
43	Motor actual speed output < Pr. 02-47	Active when motor actual speed is less than Pr. 02-47.
44	Low current output	This function is used with Pr. 06-71 ~ Pr. 06-73.
45	UVW magnetic contactor ON / OFF switch	Use this function with external terminal input = 49 (drive enabled) and external terminal output = 45 (electromagnetic contractor enabled), then the magnetic contactor will be ON or OFF according to the status of drive. 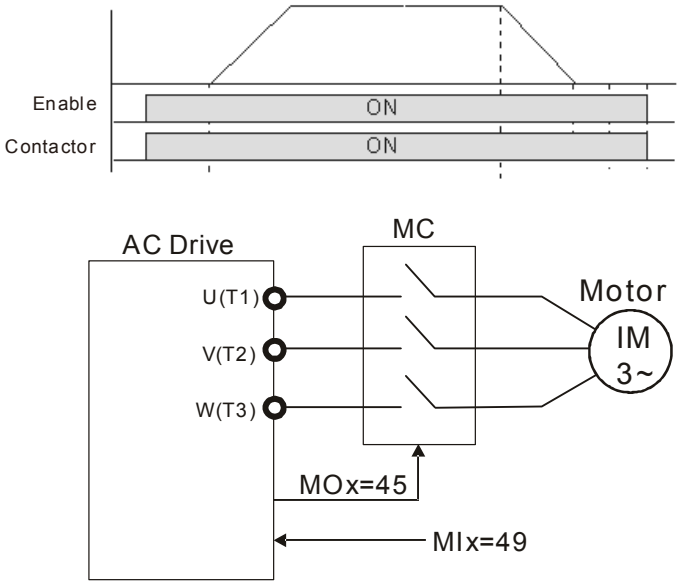
46	Master dEb signal output	When dEb arises at Master, MO will send a dEb signal to Slave. Output the message when dEb occurs to Master. This will ensure that dEb also occurs to Slave. Then Slave will follow the decelerate time of Master to stop simultaneously.

<table>
<tr><th>Settings</th><th>Functions</th><th>Descriptions</th></tr>
<tr><td>50</td><td>Output for CANopen control</td><td>Control multi-function output terminals by CANopen.
The mapping table of the CANopen DO is as follows:
<table>
<tr><th>Physical terminal</th><th>Setting of related parameters</th><th>Attribute</th><th>Corresponding index</th></tr>
<tr><td>RY1</td><td>Pr. 2-13 = 50</td><td>RW</td><td>2026-41
bit 0 of initial value 0x01</td></tr>
<tr><td>MO1</td><td>Pr. 2-16 = 50</td><td>RW</td><td>2026-41
bit 3 of initial value 0x01</td></tr>
<tr><td>MO2</td><td>Pr. 2-17 = 50</td><td>RW</td><td>2026-41
bit 4 of initial value 0x01</td></tr>
</table>
Refer to Chapter 15-3-5 for more information.</td></tr>
<tr><td>52</td><td>Output for communication card control</td><td>Control output by communication cards (CMM-MOD01, CMM-EIP01, CMM-PN01, CMM-DN01)
<table>
<tr><th>Physical terminal</th><th>Setting of related parameters</th><th>Attribute</th><th>Corresponding Address</th></tr>
<tr><td>RY</td><td>Pr. 02-13 = 51</td><td>RW</td><td>bit 0 of 2640</td></tr>
<tr><td>MO1</td><td>Pr. 02-16 = 51</td><td>RW</td><td>bit 3 of 2640</td></tr>
<tr><td>MO2</td><td>Pr. 02-17 = 51</td><td>RW</td><td>bit 4 of 2640</td></tr>
</table></td></tr>
<tr><td>66</td><td>SO output logic A</td><td rowspan="2">
<table>
<tr><th rowspan="2">Status of drive</th><th colspan="2">Status of safety output</th></tr>
<tr><th>Status A (MO = 66)</th><th>Status B (MO = 68)</th></tr>
<tr><td>Normal</td><td>Broken circuit (Open)</td><td>Short circuit (Close)</td></tr>
<tr><td>STO</td><td>Short circuit (Close)</td><td>Broken circuit (Open)</td></tr>
<tr><td>STL1~STL3</td><td>Short circuit (Close)</td><td>Broken circuit (Open)</td></tr>
</table></td></tr>
<tr><td>68</td><td>SO output logic B</td></tr>
<tr><td>67</td><td>Analog input level reached output</td><td>Multi-function output terminals operate when analog input level is between high level and low level.
03-44: Select one of the analog input channels (AVI, ACI) to be compared.
03-45: The high level of analog input, factory setting is 50 %.
03-46: The low level of analog input, factory setting is 10 %.
If analog input > 03-45, multi-function output terminal operates.
If analog input < 03-46, multi-function output terminal stops output.</td></tr>
<tr><td>73</td><td>Over torque 3</td><td>Active when over torque is detected. Pr. 14-75 is for setting over-torque detection level. Pr. 14-76 is for setting over-torque detection time. (Refer to Pr. 14-74~14-76)</td></tr>
<tr><td>74</td><td>Over torque 4</td><td>Active when over torque is detected. Pr. 14-78 is for setting over-torque detection level. Pr. 14-79 is for setting over-torque detection time. (Refer to Pr. 14-77~14-79)</td></tr>
</table>

Example of crane application:

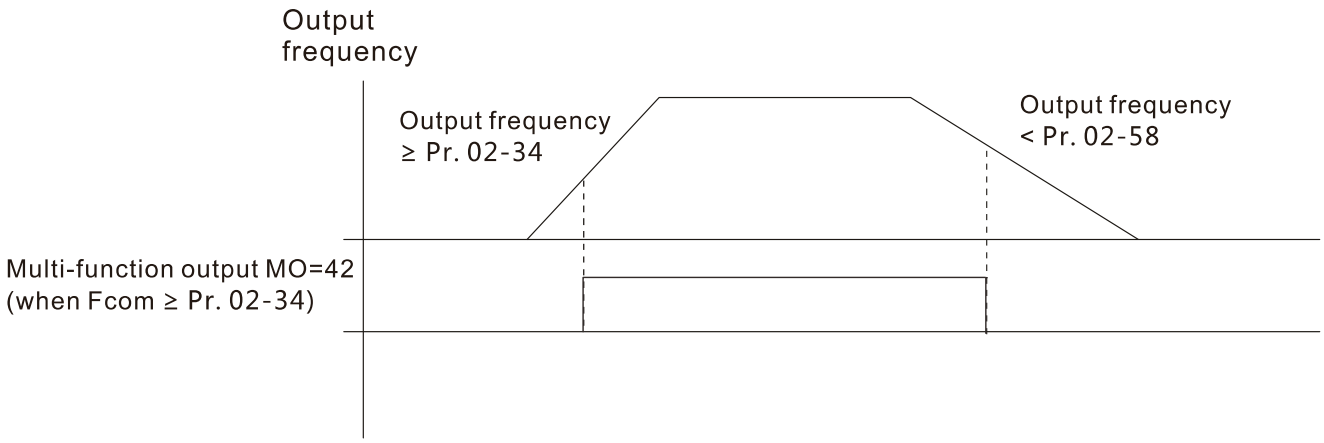

It is recommended to be used with Dwell function as shown as follows:

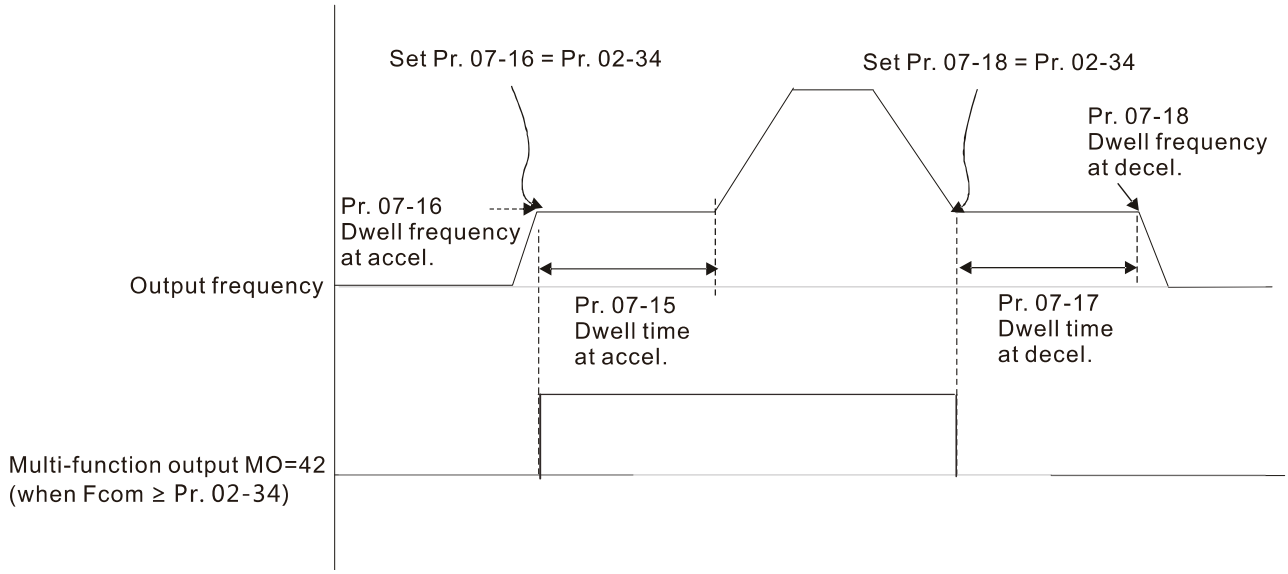

02-18 Multi-function Output Direction

Factory Setting: 0000

Settings 0000h~FFFFh (0:N.O.; 1:N.C.)

- The setting of this parameter is in hexadecimal.
- This parameter is set via bit setting. If the bit is 1, the corresponding multi-function output acts in the opposite way.

  Example:

  If Pr. 02-13 = 1 (Indicate when operating). If output is positive, bit is set to 0, then Relay 1 is ON when the drive runs and is OFF when the drive stops. On the contrary, if action is reversed, bit is set to 1, then Relay is OFF when the drive runs and is ON when the drive stops.

bit 4	bit 3	bit 2	bit 1	bit 0
MO2	MO1	reserved	reserved	RY

02-19 Terminal Counting Value Attained (return to 0)

Factory Setting: 0

Settings 0~65500

- This parameter needs to use KPC-CC01 (optional).
- Input point of the counter can be set by multi-function terminal MI6 as a trigger terminal (set Pr. 02-06 to 23). When counting completed, the specified multi-function output terminal will be activated (Pr. 02-13, Pr. 02-36, Pr. 02-37 is set to 18). Pr. 02-19 cannot be set to 0 at this time.
- When displayed c5555, the drive has counted 5,555 times. If displayed c5555**.** , the actual count value is 55,550 ~ 55,559.

02-20 Preliminary Counting Value Attained (not return to 0)

Factory Setting: 0

Settings 0~65500

- This parameter needs to use KPC-CC01 (optional).
- When the count value counts from 1 to attain this value, the corresponding multi-function output terminal will be activated (Pr. 02-13, Pr. 02-36, Pr. 02-37 is set to 17). This parameter can be used for the end of counting to make the drive runs from the low speed to stop.

  Time series diagram is shown below:

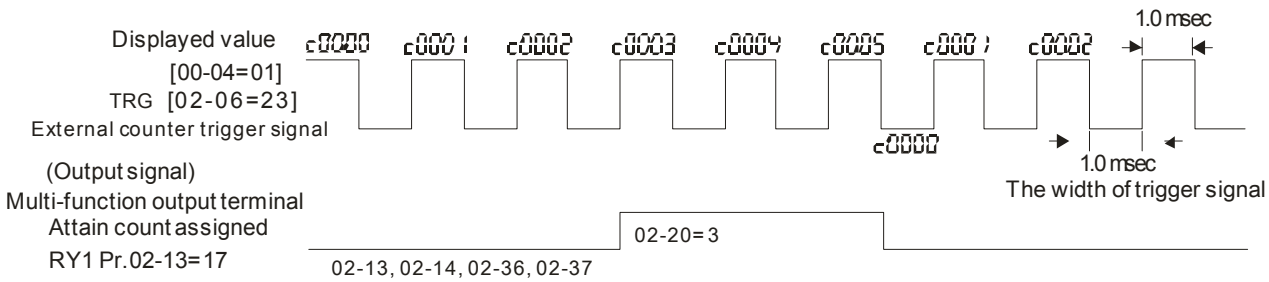

02-21 Digital Output Gain (DFM)

Factory Setting: 1

Settings 1~55

- It is used to set the signal for the digital output terminals (DFM-DCM) and digital frequency output (pulse, work period = 50 %). Output pulse per second = output frequency X Pr. 02-21.

02-22 Desired Frequency Attained 1

Factory Setting: 60.00 / 50.00

Settings 0.00~599.00 Hz

02-23 The Width of the Desired Frequency Attained 1

Factory Setting: 2.00

Settings 0.00~599.00 Hz

02-24 Desired Frequency Attained 2

Factory Setting: 60.00 / 50.00

Settings 0.00~599.00 Hz

02-25 The Width of the Desired Frequency Attained 2

Factory Setting: 2.00

Settings 0.00~599.00 Hz

Once output speed (frequency) reaches desired speed (frequency), if the corresponding multi-function output terminal is set to 3 ~ 4 (Pr. 02-13, Pr. 02-36, and Pr. 02-37), this multi-function output terminal will be “closed”.

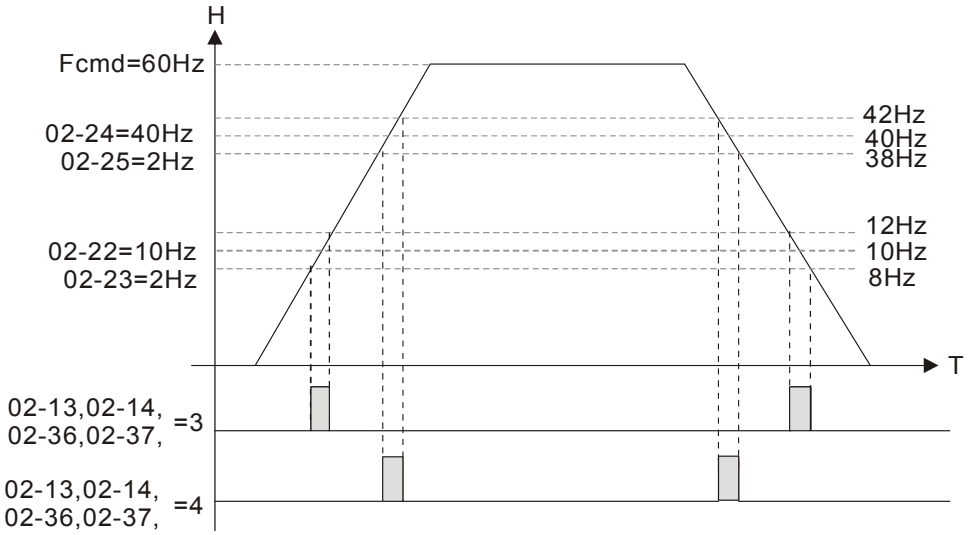

02-34 Output Frequency Setting for Multi-function Output Terminal

Factory Setting: 0.00

Settings 0.00~599.00 Hz

When output frequency is ≥ Pr. 02-34 (actual output H ≥ 02-34), the multi-function terminal (Pr. 02-13, 02-16, 02-17) be set to 29 will activate.

When output frequency is < Pr. 02-34 (actual output H < 02-34), the multi-function terminal (Pr. 02-13, 02-16, 02-17) be set to 30 will activate.

02-35 External Operation Control Selection after Reset and Activate

Factory Setting: 0

Settings 0: Disable

1: Drive runs if the run command still exists after reset or re-boots.

Set value is 1:

Status 1: After the drive is powered on and the external terminal for RUN keeps ON, the drive will run.

Status 2: After clearing fault once a fault is detected and the external terminal for RUN keeps ON, the drive can run after pressing RESET key.

02-47 Zero-speed Level of Motor

Factory Setting: 0

Settings 0~65535 rpm

This parameter should be used with the multi-function output terminals set to 43. Required to be used with PG cared and motor with encoder feedback.

This parameter is used to set the level of motor at zero-speed. When the actual speed is lower than this setting, the corresponding multi-function output terminal which is set to 43 will be ON, as shown below:

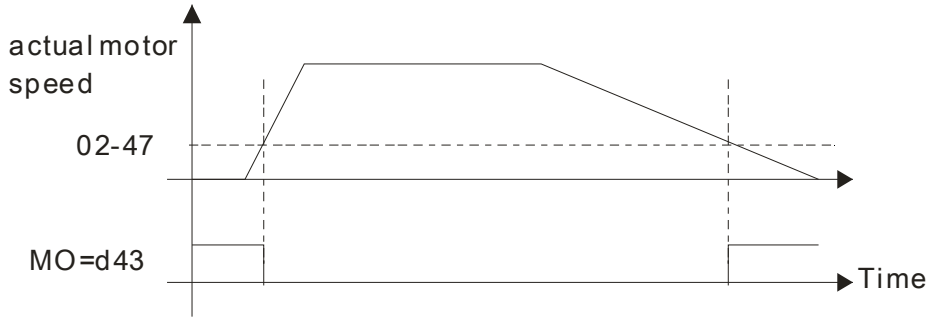

02-50 Display the Status of Multi-function Input Terminal

Factory Setting: Read only

Settings Monitor the status of multi-function input terminals

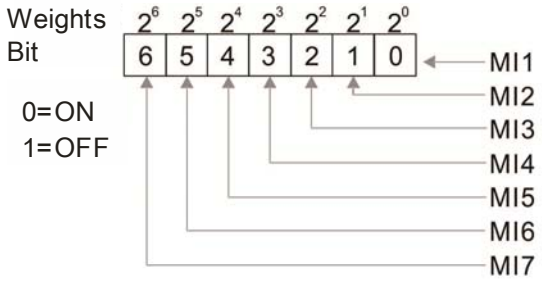

For Example:

If Pr. 02-50 displays 0034h (Hex), i.e. the value is 52 (decimal), and 110100 (binary). It means MI3, MI5 and MI6 are ON.

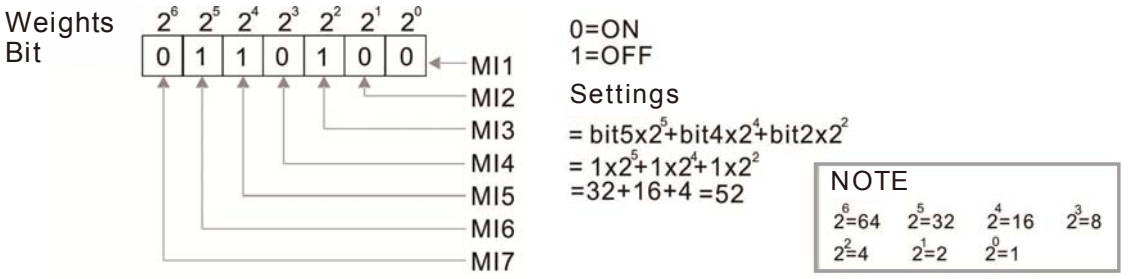

02-51 Status of Multi-function Output Terminal

Factory Setting: Read only

Settings Monitor the status of multi-function output terminals

For Example:

When Pr. 02-51 displays 000Bh (hex), i.e. the value is 11 (decimal), and switched to 1011 (binary) which means RY. MO1 is at ON status.

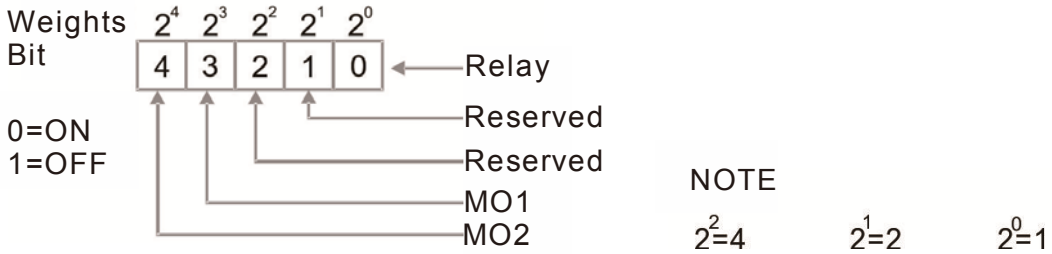

02-52 Display External Multi-function Input Terminal Used by PLC

Factory Setting: Read only

Settings Monitor the status of PLC input terminals

Pr. 02-52 displays the external multi-function input terminal that used by PLC.

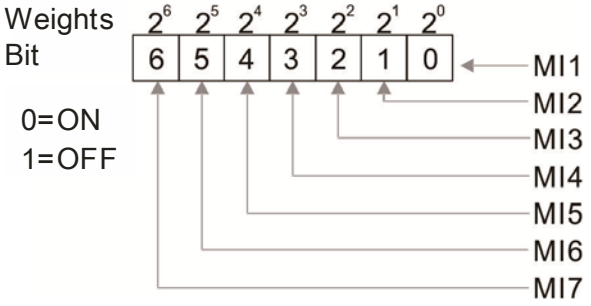

For Example:

When Pr. 02-52 displays 0034h (hex) and switched to 110100 (binary), it means MI3, MI5 and MI6 are used by PLC.

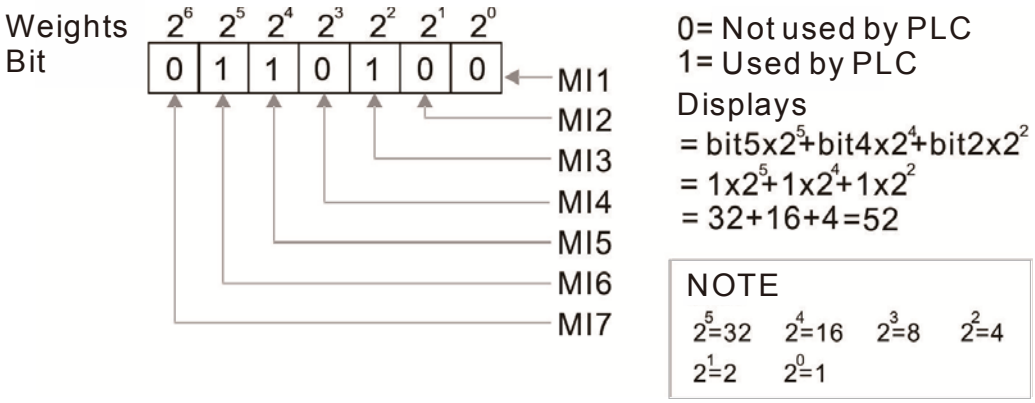

02-53 Display External Multi-function Output Terminal Occupied by PLC

Factory Setting: Read only

Settings Monitor the status of PLC output terminals

Pr. 02-53 displays the external multi-function output terminal that used by PLC.

For Example:

When Pr. 02-51 displays 000Bh (hex), i.e. the value is 11 (decimal), and switched to 1011 (binary) which means RY. MO1 is at ON status.

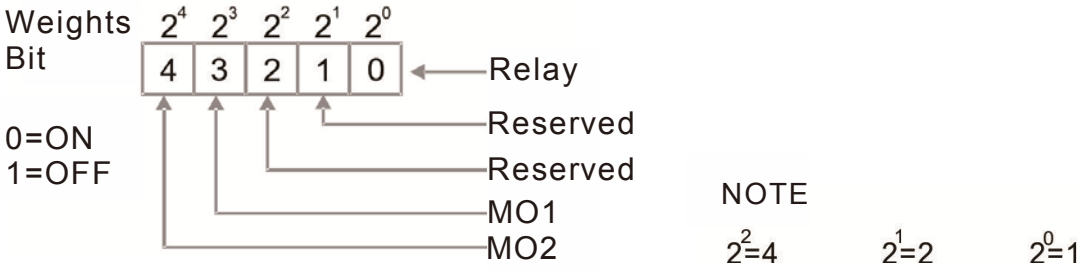

For Example:

If the value of Pr. 02-53 displays 0003h (hex), it means RY is used by PLC.

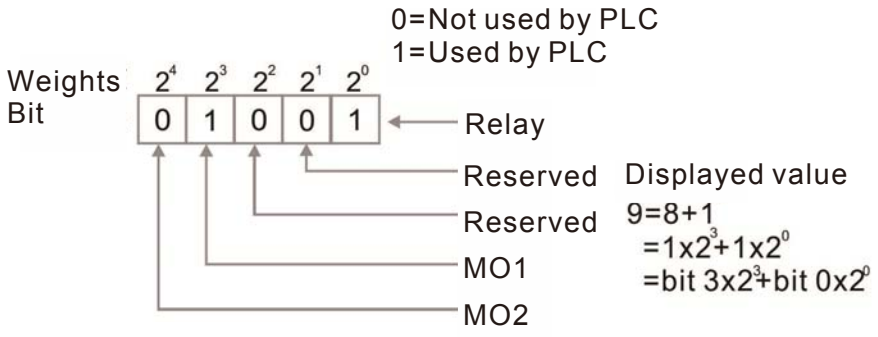

02-54 Display Memory of Frequency Command Used by External Terminal

Factory Setting: Read only

Settings Read only

When the source of frequency command set as external terminal, if Lv or Fault occurs at this time, the frequency command of external terminal will be saved in this parameter.

02-58 Multi-function Output Terminal: Function 42: Brake Frequency Checking Point

Factory setting: 0.00

Settings 0.00~599.00 Hz

Pr. 02-34 can be used with Pr. 02-58 for crane function. (Choose crane action # 42 to set up multi-function output Pr. 02-13, Pr. 02-16, and Pr. 02-17)

When output frequency of the drive is higher than the setting of Pr. 02-34 set frequency level (≥ Pr. 02-34), choose # 42 to set up multi-function output terminal.

When the output frequency is lower than the setting of Pr. 02-58 (< Pr. 02-58), choose # 42 to disable multi-function output terminal.

02-78 Deceleration Ratio for Motor

Factory setting: 200.0

Settings 4.0~1000.0

02-79 Automatic Positioning Angle Setting

Factory setting:180.0

Settings 0.0~6480.0

02-80 Automatic Positioning Deceleration Time

Factory setting: 0.00

Settings 0.00 Function disable

0.01~100.00 s

0.00 automatic positioning function is invalid.

02-81 EF Active when Terminal Count Value Attained

Factory setting: 0

Settings 0: Terminal count value attained, no EF display (Continue to operate)

1: Terminal count value attained, EF active

02-82 Initial Frequency Command (F) Mode after Stop

Factory setting: 0

Settings 0: By current freq. command

1: By zero freq. command

2: Refer to Pr. 02-83 to set up

02-83 Initial Frequency Command (F) Setting after Stop

Factory setting: 60.00

Settings 0.00~599.0 Hz

03 Analog Input / Output Parameter

This parameter can be set during operation.

03-00 Analog Input Selection (AVI)

Factory Setting: 1

03-01 Analog Input Selection (ACI)

Factory Setting: 0

Settings
- 0: No function
- 1: Frequency command
- 4: PID target value
- 5: PID feedback signal
- 6: PTC thermistor input value
- 11: PT100 thermistor input value
- 12: Auxiliary frequency input
- 13: PID compensation value

When using analog input as PID reference value, Pr. 00-20 must set 2 (analog input).
Pr. 03-00~03-01 set 1 as PID reference input
If the setting value 1 and set value 4 exist at the same time, AVI input has highest priority to become PID reference input.

When using analog input as PID compensation value, Pr. 08-16 must set 1 (Source of PID compensation is analog input). The compensation value can be observed via Pr. 08-17.

When it is frequency command, the corresponding value for 0 ~ ± 10V / 4~20 mA is 0 ~ max. output frequency (Pr. 01-00).

When it is torque command, the corresponding value for 0 ~ ± 10V / 4~20 mA is 0 ~ max. output torque (Pr.11-27).

When it is torque compensation, the corresponding value for 0 ~ ± 10V / 4~20 mA is 0 ~ rated torque.

When the setting of Pr. 03-00~Pr. 03-01 is the same, the AVI will be selected first.

03-03 Analog Input Bias (AVI)

Factory Setting: 0

Settings -100.0~100.0 %

It is used to set the corresponding AVI voltage of the external analog input 0.

03-04 Analog Input Bias (ACI)

Factory Setting: 0

Settings -100.0~100.0 %

It is used to set the corresponding ACI voltage of the external analog input 0.

03-07 Positive / Negative Bias Mode (AVI)
03-08 Positive / Negative Bias Mode (ACI)

Factory Setting: 0

Settings
- 0: Zero bias
- 1: Lower than or equal to bias
- 2: Greater than or equal to bias

3: The absolute value of the bias voltage while serving as the center

4: Serve bias as the center

In a noisy environment, it is advantageous to use negative bias to provide a noise margin. It is recommended NOT to use less than 1V to set the operation frequency.

03-10 Reverse Setting when Analog Signal Input is Negative Frequency

Factory Setting: 0

Settings

0: Negative frequency input is not allowed. Forward and reverse run is controlled by digital keypad or external terminal.

1: Negative frequency input is allowed. Positive frequency = forward run; negative frequency = reverse run. Run direction can not be switched by digital keypad or the external terminal control.

Pr. 03-10 is used to enable reverse run command when a negative frequency (negative bias and gain) is input to AVI or ACI analog signal input.

Condition for negative frequency (reverse)

1. Pr. 03-10 = 1
2. Bias mode = Serve bias as center
3. Corresponded analog input gain < 0 (negative), make input frequency be negative.

In using addition function of analog input (Pr. 03-18 = 1), when analog signal is negative after adding, this parameter can be set for allowing reverse or not. The result after adding will be restricted by “Condition for negative frequency (reverse)”

In the diagram below:

- Black line: curve with no bias.
- Gray line: curve with bias

Diagram 01

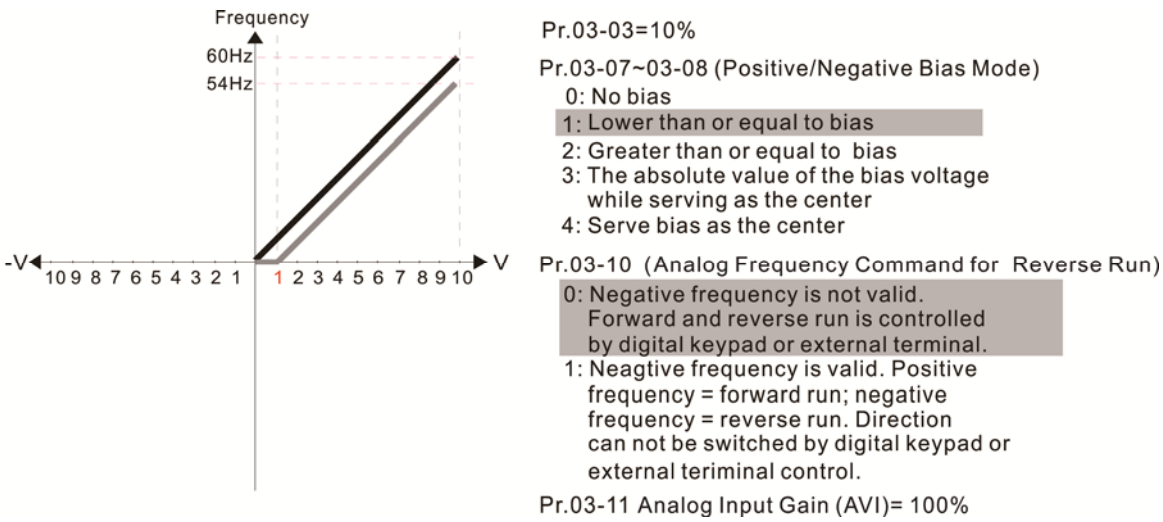

Diagram 02

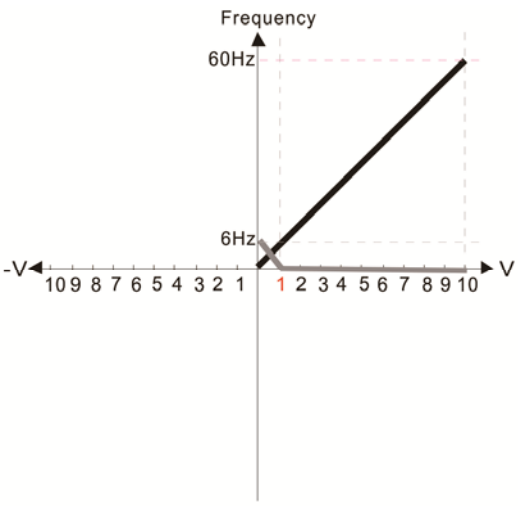

Pr.03-03=10%

Pr.03-07~03-08 (Positive/Negative Bias Mode)

0: No bias
1: Lower than or equal to bias
2: Greater than or equal to bias
3: The absolute value of the bias voltage while serving as the center
4: Serve bias as the center

Pr.03-10 (Analog Frequency Command for Reverse Run)

0: Negative frequency is not valid. Forward and reverse run is controlled by digital keypad or external terminal.
1: Neagtive frequency is valid. Positive frequency = forward run; negative frequency = reverse run. Direction can not be switched by digital keypad or external teriminal control.

Pr.03-11Analog Input Gain (AVI)=100%

Diagram 03

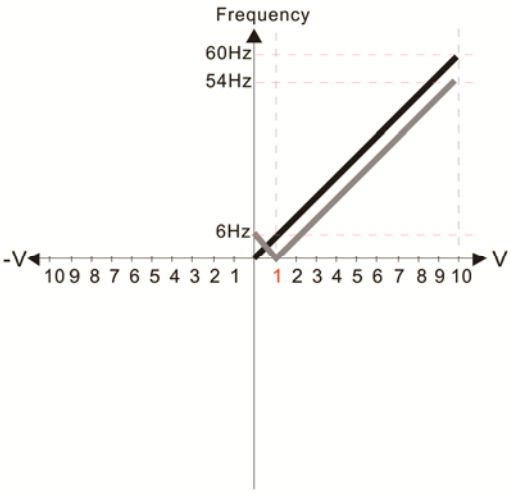

Pr.03-03=10%

Pr.03-07~03-08 (Positive/Negative Bias Mode)

0: No bias
1: Lower than or equal to bias
2: Greater than or equal to bias
3: The absolute value of the bias voltage while serving as the center
4: Serve bias as the center

Pr.03-10 (Analog Frequency Command for Reverse Run)

0: Negative frequency is not valid. Forward and reverse run is controlled by digital keypad or external terminal.
1: Neagtive frequency is valid. Positive frequency = forward run; negative frequency = reverse run. Direction can not be switched by digital keypad or external teriminal control.

Pr.03-11 Analog Input Gain (AVI) = 100%

Diagram 04

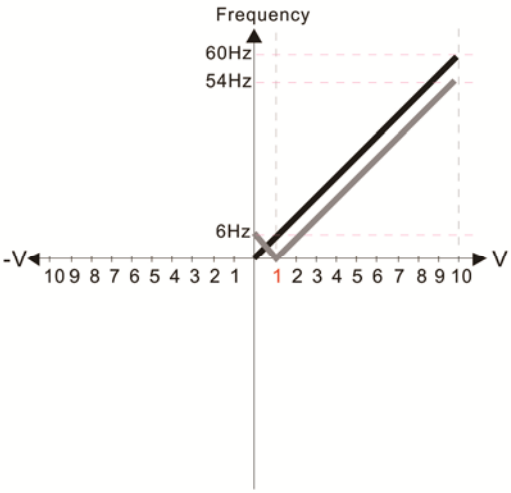

Pr.03-03=10%

Pr.03-07~03-08 (Positive/Negative Bias Mode)

0: No bias
1: Lower than or equal to bias
2: Greater than or equal to bias
3: The absolute value of the bias voltage while serving as the center
4: Serve bias as the center

Pr.03-10 (Analog Frequency Command for Reverse Run)

0: Negative frequency is not valid. Forward and reverse run is controlled by digital keypad or external terminal.
1: Neagtive frequency is valid. Positive frequency = forward run; negative frequency = reverse run. Direction can not be switched by digital keypad or external teriminal control.

Pr.03-11 Analog Input Gain (AVI) = 100%

Diagram 05

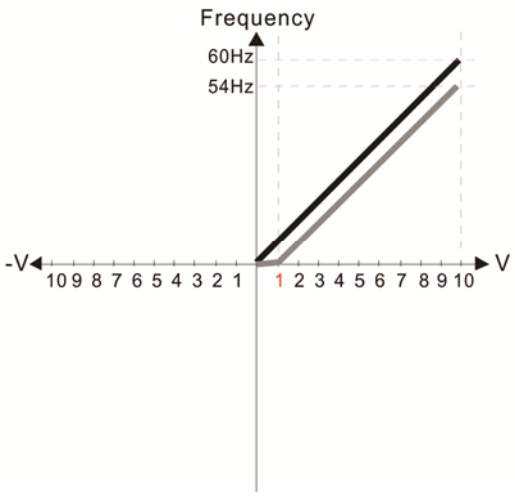

Pr.03-03=10%

Pr.03-07~03-08 (Positive/Negative Bias Mode)

0: No bias
1: Lower than or equal to bias
2: Greater than or equal to bias
3: The absolute value of the bias voltage while serving as the center
4: Serve bias as the center

Pr.03-10 (Analog Frequency Command for Reverse Run)

0: Negative frequency is not valid. Forward and reverse run is controlled by digital keypad or external terminal.
1: Neagtive frequency is valid. Positive frequency = forward run; negative frequency = reverse run. Direction can not be switched by digital keypad or external teriminal control.

Pr.03-11 Analog Input Gain (AVI)= 100%

Diagram 06

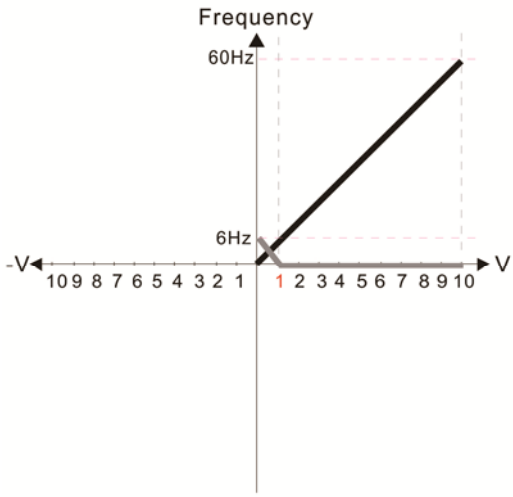

Pr.03-03=10%

Pr.03-07~03-08 (Positive/Negative Bias Mode)

0: No bias
1: Lower than or equal to bias
2: Greater than or equal to bias
3: The absolute value of the bias voltage while serving as the center
4: Serve bias as the center

Pr.03-10 (Analog Frequency Command for Reverse Run)

0: Negative frequency is not valid. Forward and reverse run is controlled by digital keypad or external terminal.
1: Neagtive frequency is valid. Positive frequency = forward run; negative frequency = reverse run. Direction can not be switched by digital keypad or external teriminal control.

Pr.03-11Analog Input Gain (AVI)= 100%

Diagram 07

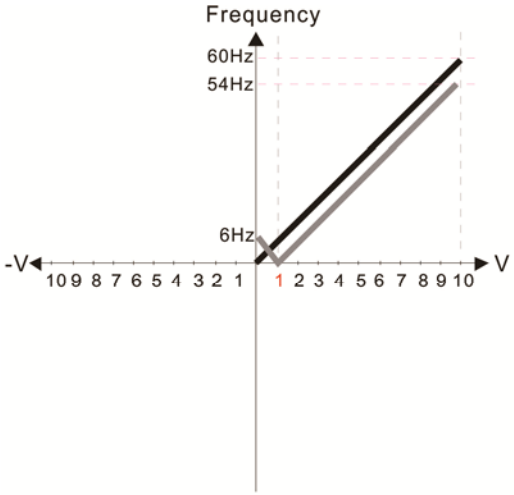

Pr.03-03=10%

Pr.03-07~03-08 (Positive/Negative Bias Mode)

0: No bias
1: Lower than or equal to bias
2: Greater than or equal to bias
3: The absolute value of the bias voltage while serving as the center
4: Serve bias as the center

Pr.03-10 (Analog Frequency Command for Reverse Run)

0: Negative frequency is not valid. Forward and reverse run is controlled by digital keypad or external terminal.
1: Neagtive frequency is valid. Positive frequency = forward run; negative frequency = reverse run. Direction can not be switched by digital keypad or external teriminal control.

Pr.03-11 Analog Input Gain (AVI) = 100%

Diagram 08

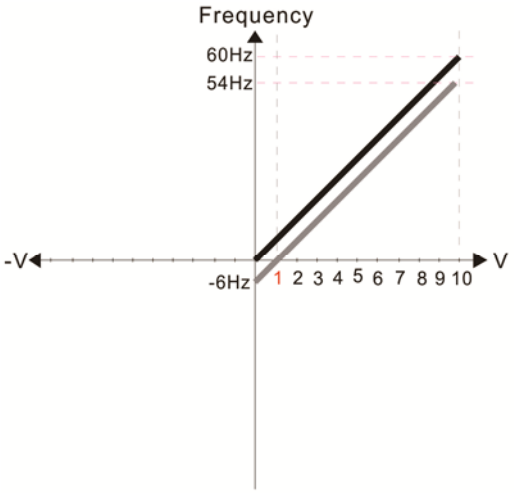

Pr.03-03=10%

Pr.03-07~03-08 (Positive/Negative Bias Mode)

0: No bias
1: Lower than or equal to bias
2: Greater than or equal to bias
3: The absolute value of the bias voltage while serving as the center
4: Serve bias as the center

Pr.03-10 (Analog Frequency Command for Reverse Run)

0: Negative frequency is not valid. Forward and reverse run is controlled by digital keypad or external terminal.
1: Neagtive frequency is valid. Positive frequency = forward run; negative frequency = reverse run. Direction can not be switched by digital keypad or external teriminal control.

Pr.03-11 Analog Input Gain (AVI) = 100%

Diagram 09

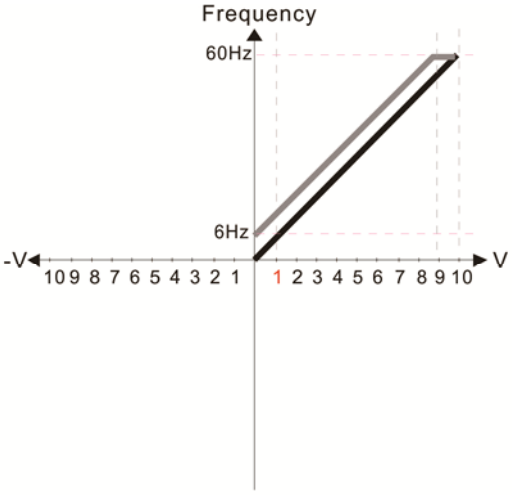

Pr.03-03=-10%

Pr.03-07~03-08 (Positive/Negative Bias Mode)

0: No bias
1: Lower than or equal to bias
2: Greater than or equal to bias
3: The absolute value of the bias voltage while serving as the center
4: Serve bias as the center

Pr.03-10 (Analog Frequency Command for Reverse Run)

0: Negative frequency is not valid. Forward and reverse run is controlled by digital keypad or external terminal.
1: Neagtive frequency is valid. Positive frequency = forward run; negative frequency = reverse run. Direction can not be switched by digital keypad or external teriminal control.

Pr.03-11 Analog Input Gain (AVI)= 100%

Diagram 10

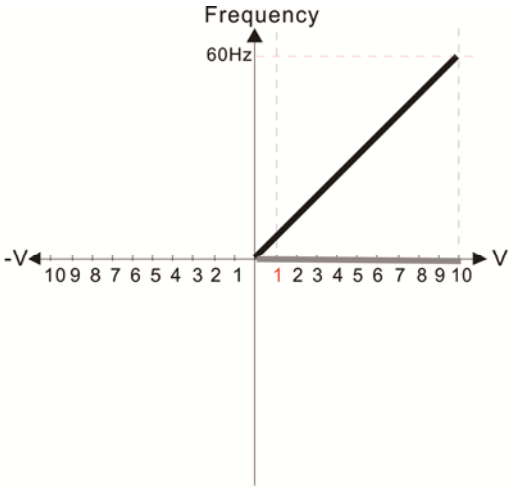

Pr.03-03=-10%

Pr.03-07~03-08 (Positive/Negative Bias Mode)

0: No bias
1: Lower than or equal to bias
2: Greater than or equal to bias
3: The absolute value of the bias voltage while serving as the center
4: Serve bias as the center

Pr.03-10 (Analog Frequency Command for Reverse Run)

0: Negative frequency is not valid. Forward and reverse run is controlled by digital keypad or external terminal.
1: Neagtive frequency is valid. Positive frequency = forward run; negative frequency = reverse run. Direction can not be switched by digital keypad or external teriminal control.

Pr.03-11 Analog Input Gain (AVI)= 100%

Diagram 11

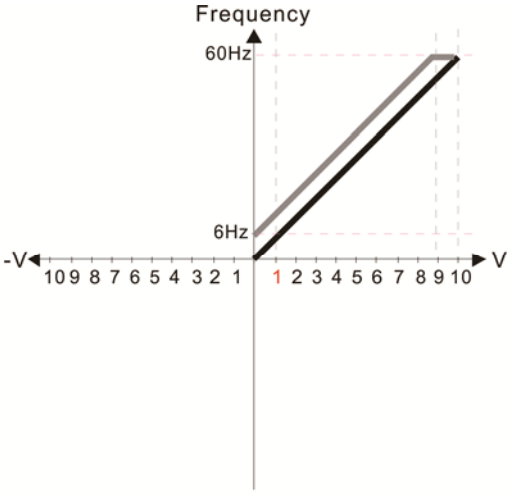

Pr.03-03=-10%

Pr.03-07~03-08 (Positive/Negative Bias Mode)

0: No bias
1: Lower than or equal to bias
2: Greater than or equal to bias
3: The absolute value of the bias voltage while serving as the center
4: Serve bias as the center

Pr.03-10 (Analog Frequency Command for Reverse Run)

0: Negative frequency is not valid. Forward and reverse run is controlled by digital keypad or external terminal.
1: Neagtive frequency is valid. Positive frequency = forward run; negative frequency = reverse run. Direction can not be switched by digital keypad or external teriminal control.

Pr.03-11 Analog Input Gain (AVI) = 100%

Diagram 12

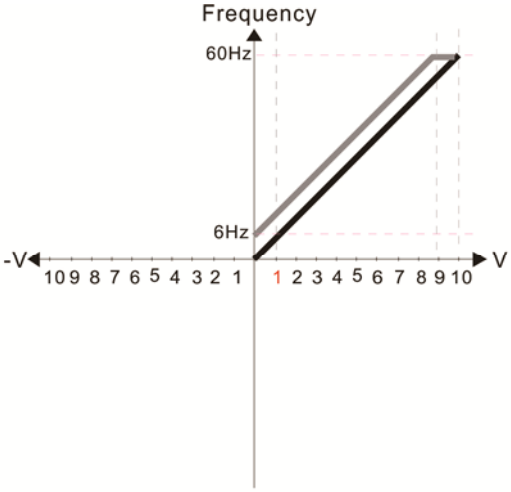

Pr.03-03=-10%

Pr.03-07~03-08 (Positive/Negative Bias Mode)

0: No bias
1: Lower than or equal to bias
2: Greater than or equal to bias
3: The absolute value of the bias voltage while serving as the center
4: Serve bias as the center

Pr.03-10 (Analog Frequency Command for Reverse Run)

0: Negative frequency is not valid. Forward and reverse run is controlled by digital keypad or external terminal.
1: Neagtive frequency is valid. Positive frequency = forward run; negative frequency = reverse run. Direction can not be switched by digital keypad or external teriminal control.

Pr.03-11 Analog Input Gain (AVI) = 100%

Diagram 13

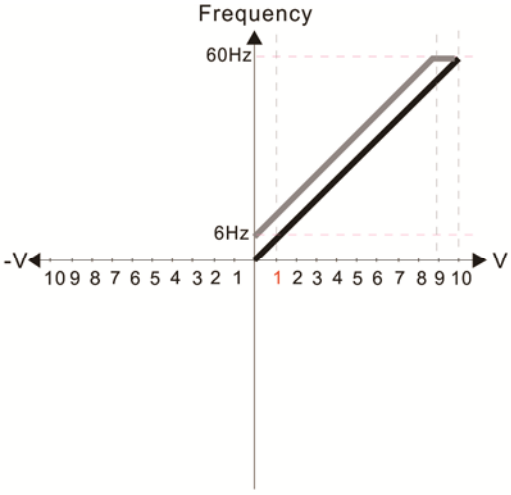

Pr.03-03=-10%

Pr.03-07~03-08 (Positive/Negative Bias Mode)

0: No bias
1: Lower than or equal to bias
2: Greater than or equal to bias
3: The absolute value of the bias voltage while serving as the center
4: Serve bias as the center

Pr.03-10 (Analog Frequency Command for Reverse Run)

0: Negative frequency is not valid. Forward and reverse run is controlled by digital keypad or external terminal.
1: Neagtive frequency is valid. Positive frequency = forward run; negative frequency = reverse run. Direction can not be switched by digital keypad or external teriminal control.

Pr.03-11 Analog Input Gain (AVI)= 100%

Diagram 14

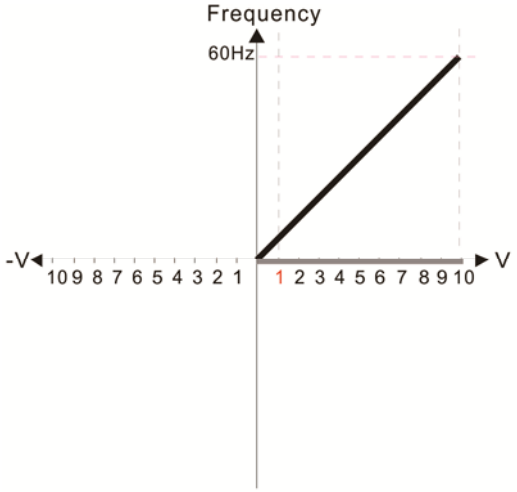

Pr.03-03=-10%

Pr.03-07~03-08 (Positive/Negative Bias Mode)
0: No bias
1: Lower than or equal to bias
2: Greater than or equal to bias
3: The absolute value of the bias voltage while serving as the center
4: Serve bias as the center

Pr.03-10 (Analog Frequency Command for Reverse Run)
0: Negative frequency is not valid. Forward and reverse run is controlled by digital keypad or external terminal.
1: Neagtive frequency is valid. Positive frequency = forward run; negative frequency = reverse run. Direction can not be switched by digital keypad or external teriminal control.

Pr.03-11 Analog Input Gain (AVI)= 100%

Diagram 15

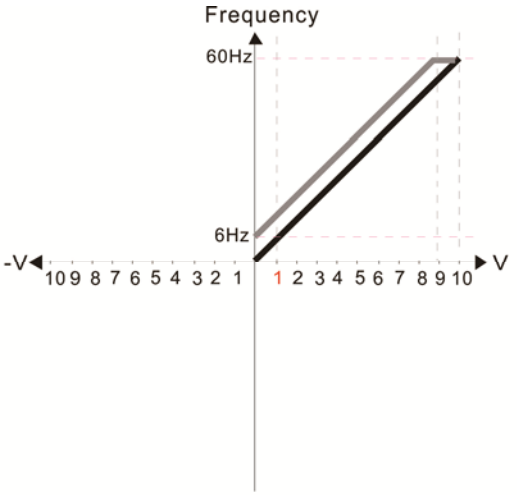

Pr.03-03=-10%

Pr.03-07~03-08 (Positive/Negative Bias Mode)
0: No bias
1: Lower than or equal to bias
2: Greater than or equal to bias
3: The absolute value of the bias voltage while serving as the center
4: Serve bias as the center

Pr.03-10 (Analog Frequency Command for Reverse Run)
0: Negative frequency is not valid. Forward and reverse run is controlled by digital keypad or external terminal.
1: Neagtive frequency is valid. Positive frequency = forward run; negative frequency = reverse run. Direction can not be switched by digital keypad or external teriminal control.

Pr.03-11 Analog Input Gain (AVI) = 100%

Diagram 16

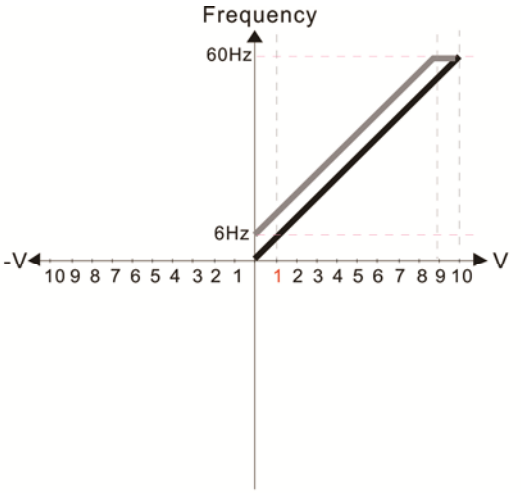

Pr.03-03=-10%

Pr.03-07~03-08 (Positive/Negative Bias Mode)
0: No bias
1: Lower than or equal to bias
2: Greater than or equal to bias
3: The absolute value of the bias voltage while serving as the center
4: Serve bias as the center

Pr.03-10 (Analog Frequency Command for Reverse Run)
0: Negative frequency is not valid. Forward and reverse run is controlled by digital keypad or external terminal.
1: Neagtive frequency is valid. Positive frequency = forward run; negative frequency = reverse run. Direction can not be switched by digital keypad or external teriminal control.

Pr.03-11 Analog Input Gain (AVI) = 100%

Diagram 17

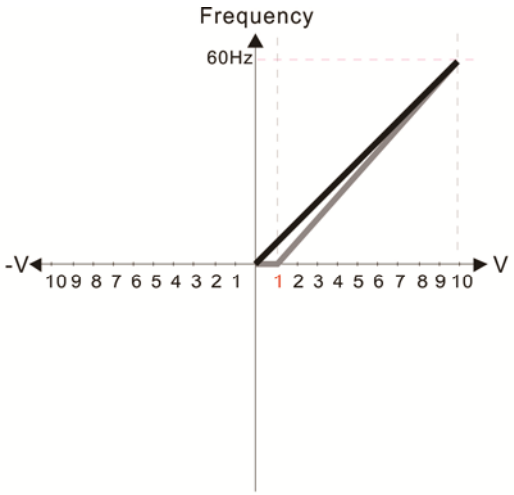

Pr.03-03=10%

Pr.03-07~03-08 (Positive/Negative Bias Mode)

0: No bias
1: Lower than or equal to bias
2: Greater than or equal to bias
3: The absolute value of the bias voltage while serving as the center
4: Serve bias as the center

Pr.03-10 (Analog Frequency Command for Reverse Run)

0: Negative frequency is not valid. Forward and reverse run is controlled by digital keypad or external terminal.
1: Neagtive frequency is valid. Positive frequency = forward run; negative frequency = reverse run. Direction can not be switched by digital keypad or external teriminal control.

Pr.03-11 Analog Input Gain (AVI)= 111.1%

10/9=111.1%

Diagram 18

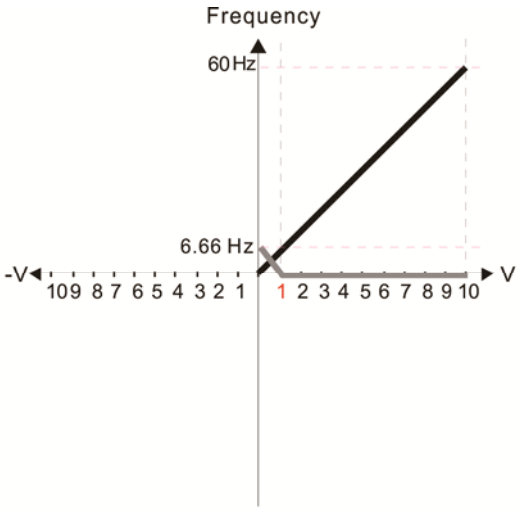

Pr.03-03=10%

Pr.03-07~03-08 (Positive/Negative Bias Mode)

0: No bias
1: Lower than or equal to bias
2: Greater than or equal to bias
3: The absolute value of the bias voltage while serving as the center
4: Serve bias as the center

Pr.03-10 (Analog Frequency Command for Reverse Run)

0: Negative frequency is not valid. Forward and reverse run is controlled by digital keypad or external terminal.
1: Neagtive frequency is valid. Positive frequency = forward run; negative frequency = reverse run. Direction can not be switched by digital keypad or external teriminal control.

Pr.03-11Analog Input Gain (AVI)=111.1%

10/9 =111.1%

Diagram 19

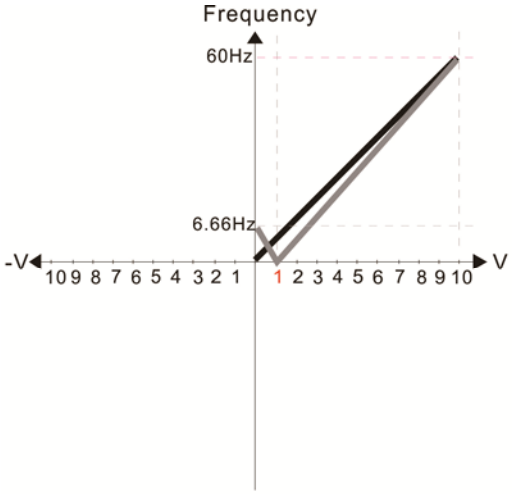

Pr.03-03=10%

Pr.03-07~03-08 (Positive/Negative Bias Mode)

0: No bias
1: Lower than or equal to bias
2: Greater than or equal to bias
3: The absolute value of the bias voltage while serving as the center
4: Serve bias as the center

Pr.03-10 (Analog Frequency Command for Reverse Run)

0: Negative frequency is not valid. Forward and reverse run is controlled by digital keypad or external terminal.
1: Neagtive frequency is valid. Positive frequency = forward run; negative frequency = reverse run. Direction can not be switched by digital keypad or external teriminal control.

Pr.03-11 Analog Input Gain (AVI) = 111.1%

10/9 =111.1%

Diagram 20

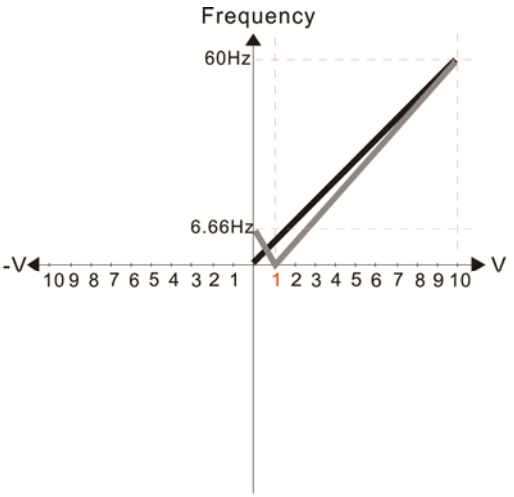

Pr.03-03=10%

Pr.03-07~03-08 (Positive/Negative Bias Mode)

0: No bias
1: Lower than or equal to bias
2: Greater than or equal to bias
3: The absolute value of the bias voltage while serving as the center
4: Serve bias as the center

Pr.03-10 (Analog Frequency Command for Reverse Run)

0: Negative frequency is not valid. Forward and reverse run is controlled by digital keypad or external terminal.
1: Neagtive frequency is valid. Positive frequency = forward run; negative frequency = reverse run. Direction can not be switched by digital keypad or external teriminal control.

Pr.03-11 Analog Input Gain (AVI) = 111.1%
10/9 =111.1%

Diagram 21

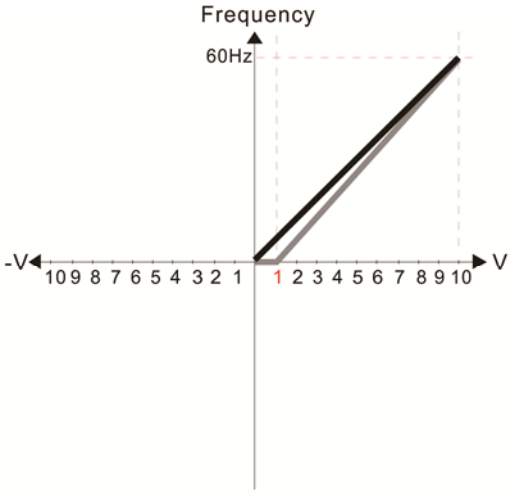

Pr.03-03=10%

Pr.03-07~03-08 (Positive/Negative Bias Mode)

0: No bias
1: Lower than or equal to bias
2: Greater than or equal to bias
3: The absolute value of the bias voltage while serving as the center
4: Serve bias as the center

Pr.03-10 (Analog Frequency Command for Reverse Run)

0: Negative frequency is not valid. Forward and reverse run is controlled by digital keypad or external terminal.
1: Neagtive frequency is valid. Positive frequency = forward run; negative frequency = reverse run. Direction can not be switched by digital keypad or external teriminal control.

Pr.03-11 Analog Input Gain (AVI) = 111.1%
10/9 =111.1%

Diagram 22

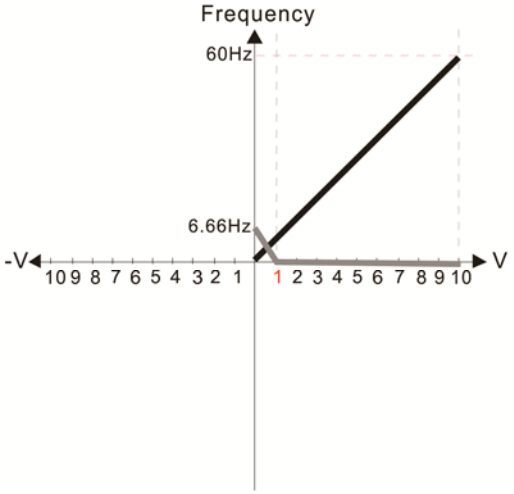

Pr.03-03=10%

Pr.03-07~03-08 (Positive/Negative Bias Mode)

0: No bias
1: Lower than or equal to bias
2: Greater than or equal to bias
3: The absolute value of the bias voltage while serving as the center
4: Serve bias as the center

Pr.03-10 (Analog Frequency Command for Reverse Run)

0: Negative frequency is not valid. Forward and reverse run is controlled by digital keypad or external terminal.
1: Neagtive frequency is valid. Positive frequency = forward run; negative frequency = reverse run. Direction can not be switched by digital keypad or external teriminal control.

Pr.03-11 Analog Input Gain (AVI) = 111.1%
10/9 =111.1%

Diagram 23

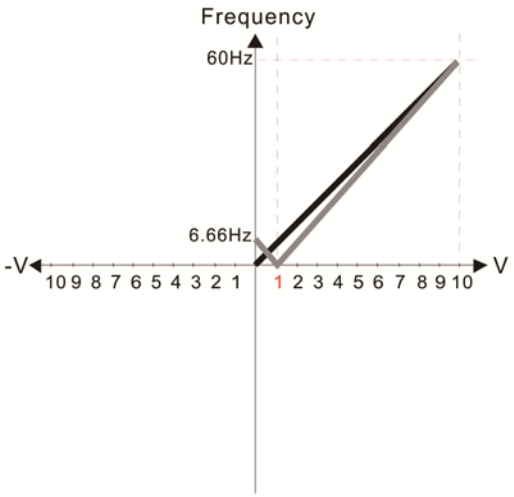

Pr.03-03=10%

Pr.03-07~03-08 (Positive/Negative Bias Mode)
0: No bias
1: Lower than or equal to bias
2: Greater than or equal to bias
3: The absolute value of the bias voltage while serving as the center
4: Serve bias as the center

Pr.03-10 (Analog Frequency Command for Reverse Run)
0: Negative frequency is not valid. Forward and reverse run is controlled by digital keypad or external terminal.
1: Neagtive frequency is valid. Positive frequency = forward run; negative frequency = reverse run. Direction can not be switched by digital keypad or external teriminal control.

Pr.03-11 Analog Input Gain (AVI) = 111.1%
10/9 =111.1%

Diagram 24

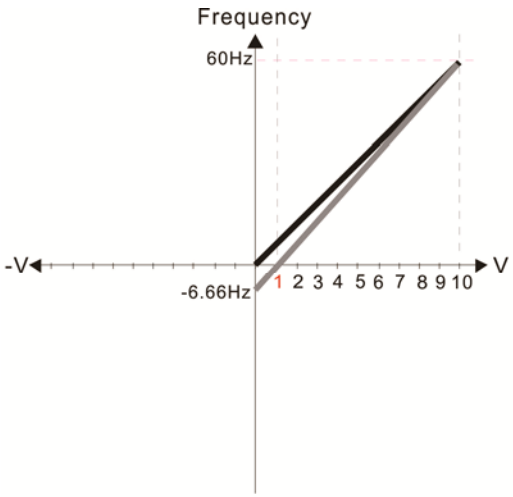

Pr.03-03=10%

Pr.03-07~03-08 (Positive/Negative Bias Mode)
0: No bias
1: Lower than or equal to bias
2: Greater than or equal to bias
3: The absolute value of the bias voltage while serving as the center
4: Serve bias as the center

Pr.03-10 (Analog Frequency Command for Reverse Run)
0: Negative frequency is not valid. Forward and reverse run is controlled by digital keypad or external terminal.
1: Neagtive frequency is valid. Positive frequency = forward run; negative frequency = reverse run. Direction can not be switched by digital keypad or external teriminal control.

Pr.03-11 Analog Input Gain (AVI) = 111.1%
10/9 =111.1%

Diagram 25

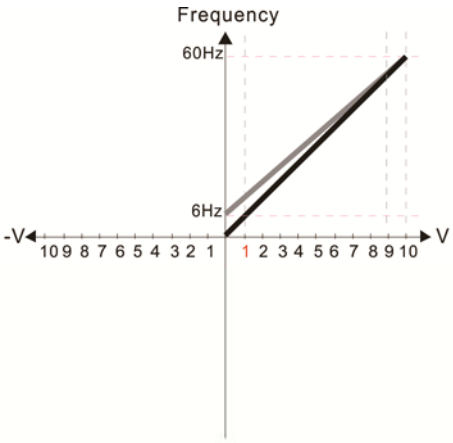

Pr.03-07~03-08 (Positive/Negative Bias Mode)
0: No bias
1: Lower than or equal to bias
2: Greater than or equal to bias
3: The absolute value of the bias voltage while serving as the center
4: Serve bias as the center

Pr.03-10 (Analog Frequency Command for Reverse Run)
0: Negative frequency is not valid. Forward and reverse run is controlled by digital keypad or external terminal.
1: Neagtive frequency is valid. Positive frequency = forward run; negative frequency = reverse run. Direction can not be switched by digital keypad or external teriminal control.

Calculate the bias: $\frac{60\text{-}6Hz}{10V} = \frac{6\text{-}0Hz}{(0\text{-}XV)}$ $XV = \frac{10}{-9} = -1.11V$

$\therefore$ Pr.03-03= $\frac{-1.11}{10} \times 100\% = -11.1\%$

Calculate the gain: Pr.03-11= $\frac{10V}{11.1V} \times 100\% = 90.0\%$

Diagram 26

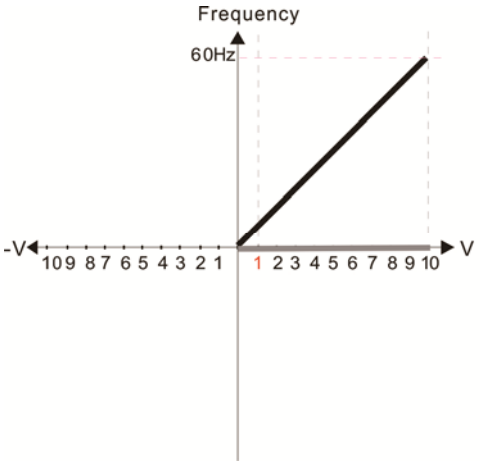

Pr.03-07~03-08 (Positive/Negative Bias Mode)

0: No bias
1: Lower than or equal to bias
2: Greater than or equal to bias
3: The absolute value of the bias voltage while serving as the center
4: Serve bias as the center

Pr.03-10 (Analog Frequency Command for Reverse Run)

0: Negative frequency is not valid. Forward and reverse run is controlled by digital keypad or external terminal.
1: Neagtive frequency is valid. Positive frequency = forward run; negative frequency = reverse run. Direction can not be switched by digital keypad or external teriminal control.

Diagram 27

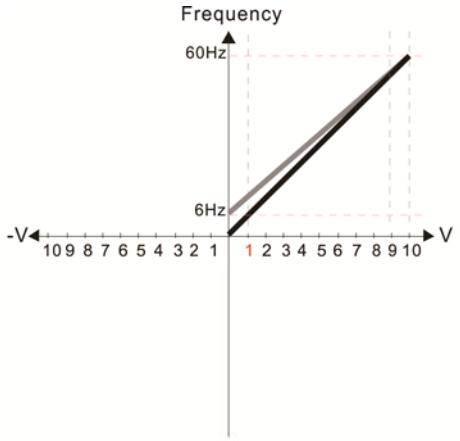

Pr.03-07~03-08 (Positive/Negative Bias Mode)

0: No bias
1: Lower than or equal to bias
2: Greater than or equal to bias
3: The absolute value of the bias voltage while serving as the center
4: Serve bias as the center

Pr.03-10 (Analog Frequency Command for Reverse Run)

0: Negative frequency is not valid. Forward and reverse run is controlled by digital keypad or external terminal.
1: Neagtive frequency is valid. Positive frequency = forward run; negative frequency = reverse run. Direction can not be switched by digital keypad or external teriminal control.

Calculate the bias: $\frac{60\text{-}6\text{Hz}}{10\text{V}} = \frac{6\text{-}0\text{Hz}}{(0\text{-XV})}$ XV= $\frac{10}{-9}$ =-1.11V

∴ Pr.03-03= $\frac{-1.11}{10}$ × 100% =-11.1%

Calculate the gain: Pr.03-11= $\frac{10\text{V}}{11.1\text{V}}$ × 100% = 90.0%

Diagram 28

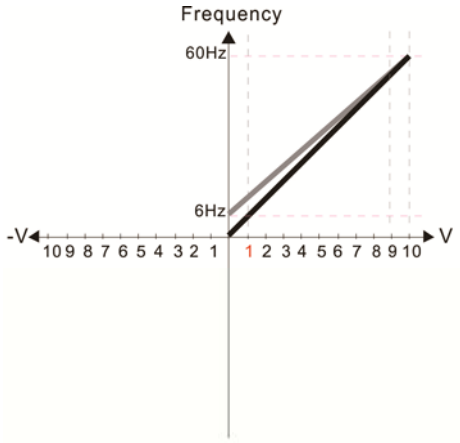

Pr.03-07~03-08(Positive/Negative Bias Mode)

0: No bias
1: Lower than or equal to bias
2: Greater than or equal to bias
3: The absolute value of the bias voltage while serving as the center
4: Serve bias as the center

Pr.03-10 (Analog Frequency Command for Reverse Run)

0: Negative frequency is not valid. Forward and reverse run is controlled by digital keypad or external terminal.
1: Neagtive frequency is valid. Positive frequency = forward run; negative frequency = reverse run. Direction can not be switched by digital keypad or external teriminal control.

Calculate the bias: $\frac{60\text{-}6\text{Hz}}{10\text{V}} = \frac{6\text{-}0\text{Hz}}{(0\text{-XV})}$ XV= $\frac{10}{-9}$ =-1.11V

∴ Pr.03-03= $\frac{-1.11}{10}$ × 100% =-11.1%

Calculate the gain: Pr.03-11= $\frac{10\text{V}}{11.1\text{V}}$ × 100% = 90.0%

Diagram 29

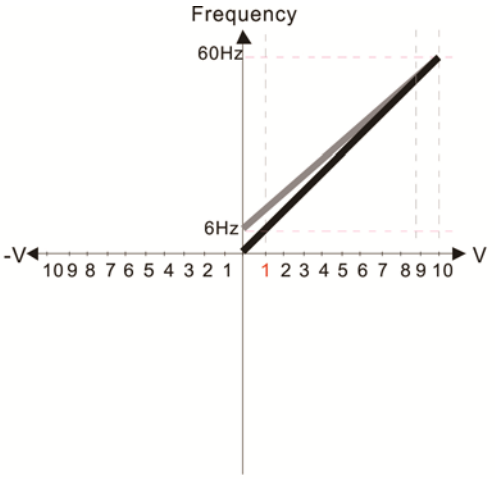

Pr.03-07~03-08 (Positive/Negative Bias Mode)
0: No bias
1: Lowerthanorequaltobias
2: Greater than or equal to bias
3: The absolute value of the bias voltage while serving as the center
4: Serve bias as the center

Pr.03-10 (Analog Frequency Command for Reverse Run)
0: Negative frequency is not valid.
Forward and reverse run is controlled by digital keypad or external terminal.
1: Negative frequency is valid.
Positive frequency = forward run;
negative frequency = reverse run.
Direction can not be switched by digital keypad or external terminal control.

Calculate the bias: $\frac{60\text{-}6Hz}{10V} = \frac{6\text{-}0Hz}{(0\text{-}XV)}$ $XV = \frac{10}{-9} = -1.11V$

$\therefore$ Pr.03-03 $= \frac{-1.11}{10} \times 100\% = -11.1\%$

Calculate the gain: Pr.03-11 $= \frac{10V}{11.1V} \times 100\% = 90.0\%$

Diagram 30

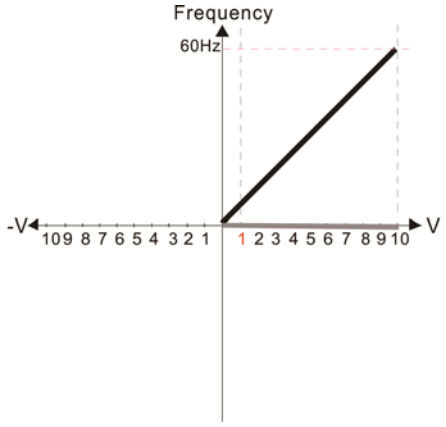

Pr.03-07~03-08 (Positive/Negative Bias Mode)
0: No bias
1: Lower than or equal to bias
2: Greater than or equal to bias
3: The absolute value of the bias voltage while serving as the center
4: Serve bias as the center

Pr.03-10 (Analog Frequency Command for Reverse Run)
0: Negative frequency is not valid.
Forward and reverse run is controlled by digital keypad or external terminal.
1: Negative frequency is valid.
Positive frequency = forward run;
negative frequency = reverse run.
Direction can not be switched by digital keypad or external terminal control.

Diagram 31

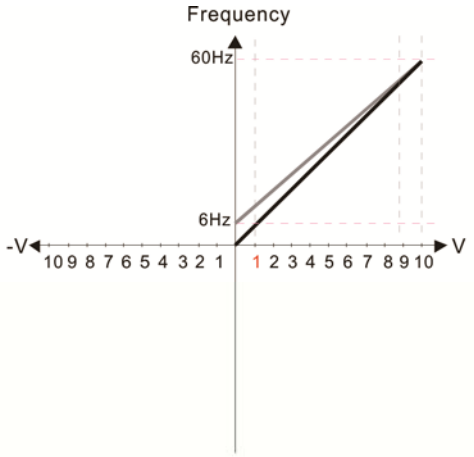

Pr.03-07~03-08 (Positive/Negative Bias Mode)
0: No bias
1: Lower than or equal to bias
2: Greater than or equal to bias
3: The absolute value of the bias voltage while serving as the center
4: Serve bias as the center

Pr.03-10 (Analog Frequency Command for Reverse Run)
0: Negative frequency is not valid.
Forward and reverse run is controlled by digital keypad or external terminal.
1: Neagative frequency is valid.
Positive frequency = forward run;
negative frequency = reverse run.
Direction can not be switched by digital keypad or external terminal control.

Calculate the bias: $\frac{60\text{-}6Hz}{10V} = \frac{6\text{-}0Hz}{(0\text{-}XV)}$ $XV = \frac{10}{-9} = -1.11V$

$\therefore$ Pr.03-03 $= \frac{-1.11}{10} \times 100\% = -11.1\%$

Calculate the gain: Pr.03-11 $= \frac{10V}{11.1V} \times 100\% = 90.0\%$

Diagram 32

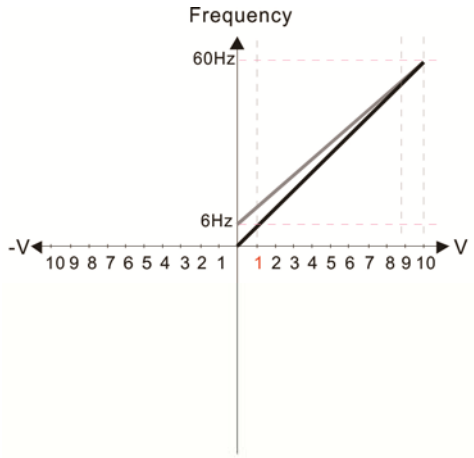

Pr.03-07~03-08 (Positive/Negative Bias Mode)
0: No bias
1: Lower than or equal to bias
2: Greater than or equal to bias
3: The absolute value of the bias voltage while serving as the center
4: Serve bias as the center

Pr.03-10 (Analog Frequency Command for Reverse Run)
0: Negative frequency is not valid. Forward and reverse run is controlled by digital keypad or external terminal.
1: Neagative frequency is valid. Positive frequency = forward run; negative frequency = reverse run. Direction can not be switched by digital keypad or external terminal control.

Calculate the bias: $\frac{60\text{-}6Hz}{10V} = \frac{6\text{-}0Hz}{(0\text{-}XV)}$ $XV = \frac{10}{-9} = -1.11V$

$\therefore$ Pr.03-03 $= \frac{-1.11}{10} \times 100\% = -11.1\%$

Calculate the gain: Pr.03-11 $= \frac{10V}{11.1V} \times 100\% = 90.0\%$

03-11 Analog Input Gain (AVI)

03-12 Analog Input Gain (ACI)

Factory Setting: 100.0

Settings -500.0~500.0 %

Pr. 03-03 to 03-14 are used when the source of frequency command is the analog voltage / current signal.

03-15 Analog Input Filter Time (AVI)

03-16 Analog Input Filter Time (ACI)

Factory Setting: 0.01

Settings 0.00~20.00 sec.

These input delays can be used to filter noisy analog signal.

When the setting of the time constant is too large, the control will be stable but the control response will be slow. When the setting of time constant is too small, the control response will be faster but the control may be unstable. To find the optimal setting, please adjust the setting according to the control stable or response status.

03-18 Addition Function of the Analog Input

Factory Setting: 0

Settings 0: Disable (AVI, ACI)
1: Enable (Exclude analog extension card)

When Pr. 03-18 is set to 1:

EX1: Pr. 03-00 = Pr. 03-01 = 1 Frequency command = AVI + ACI

When Pr. 03-18 is set to 0 and the analog input setting is the same, the priority for AVI, ACI and AVI > ACI

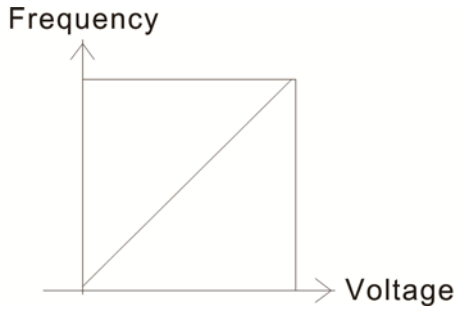

$$\text{F command}=[(\text{ay}\pm\text{bias})*\text{gain}]*\frac{\text{Fmax (01-00)}}{\text{10V or 16mA or 20mA}}$$

F command: the corresponding frequency for 10V or 20mA
ay: 0~10V, 4~20mA, 0~20mA
bias: Pr. 03-03, Pr. 03-04
gain: Pr. 03-11, Pr. 03-12

03-19 Signal Loss Selection of Analog Input 4-20 mA

Factory Setting: 0

Settings 0: Disable
1: Continue operation at the last frequency
2: Decelerate to 0 Hz
3: Stop immediately and display ACE

- This parameter determines the behavior when 4~20 mA signal is loss, when ACIc (03-29 = 0).
- When Pr. 03-29≠0, it means the voltage input to ACI terminal is 0~10V or 0~20mA. At this moment, Pr. 03-19 will be invalid.
- When setting is 1 or 2, it will display warning code “ANL” on the keypad. It will be blinking until the loss of the ACI signal is recovered.
- When the motor drive stops, the condition of warning does not exist, then the warning will disappear.

03-20 Multi-function Output 1 (AFM)

Factory Setting: 0

Settings 0~23

Function Chart

Settings	Functions	Descriptions
0	Output frequency (Hz)	Max. frequency Pr. 01-00 is regarded as 100 %.
1	Frequency command (Hz)	Max. frequency Pr. 01-00 is regarded as 100 %.
2	Motor speed (Hz)	Max. frequency Pr. 01-00 is regarded as 100 %
3	Output current (rms)	(2.5 X rated current) is regarded as 100 %
4	Output voltage	(2 X rated voltage) is regarded as 100 %
5	DC BUS voltage	450V (900V) = 100 %
6	Power factor	-1.000~1.000 = 100 %
7	Power	(2 X rated voltage) is regarded as 100 %
9	AVI	0~10 V = 0~100 %
10	ACI	4~20 mA = 0~100 %
12	Iq current command	(2.5 X rated current) is regarded as 100 %
13	Iq feedback value	(2.5 X rated current) is regarded as 100 %
14	Id current command	(2.5 X rated current) is regarded as 100 %
15	Id feedback value	(2.5 X rated current) is regarded as 100 %

Settings	Functions	Descriptions
16	Vq-axis voltage command	250V (500V) = 100 %
17	Vd-axis voltage command	250V (500V) = 100 %
19	PG2 frequency command	Max. frequency Pr. 01-00 is regarded as 100 %.
20	CANopen analog output	For CANopen communication analog output
21	RS-485 analog output	For InnerCOM analog output
22	Communication card analog output	For communication analog output (CMM-MOD01, CMM-EIP01, CMM-PN01, CMM-DN01)
23	Constant voltage output	Pr. 03-32 controls voltage/current output level 0~100 % of Pr. 03-32 corresponds to 0~10V of AFM.

03-21 Gain of Analog Output (AFM)

Factory Setting: 100.0

Settings 0~500.0 %

This function is used to adjust the voltage level outputted to analog meter head from analog signal (Pr. 03-20) output terminal AFM of drive.

03-22 Analog Output when in REV Direction (AFM)

Factory Setting: 0

Settings 0: Absolute value of output voltage
1: Reverse output 0 V; Positive output 0~10 V
2: Reverse output 5~0 V; Positive output 5~10 V

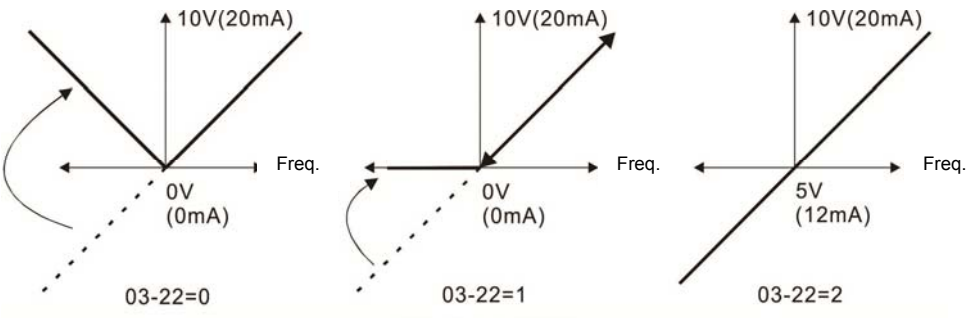

Analog output direction selection

03-27 AFM Output Bias

Factory Setting: 0.00

Settings -100.00~100.00 %

Example 1, AFM 0~10V is set output frequency, the output equation is

$$10\text{V}\times(\frac{\text{Output Frequency}}{01\text{-}00})\times 03\text{-}24+10\text{V}\times 03\text{-}27$$

Example 2, AFM 0~20 mA is set output frequency, the output equation is

$$20\text{mA}\times(\frac{\text{Output Frequency}}{01\text{-}00})\times 03\text{-}24+20\text{mA}\times 03\text{-}27$$

Example 3, AFM 4~20 mA is set output frequency, the output equation is

$$4\text{mA} + 16\text{mA} \times \left(\frac{\text{Output Frequency}}{01\text{-}00}\right) \times 03\text{-}24 + 16\text{mA} \times 03\text{-}27$$

This parameter can set the corresponding voltage of analog output 0.

03-28 AVI Terminal Input Selection

Factory Setting: 0

Settings 0: 0~10 V

3: -10 V ~ +10 V (Pr. 03-69 ~ 03-74 is valid)

03-29 ACI Terminal Input Selection

Factory Setting: 0

Settings 0: 4~20 mA

1: 0~10 V

2: 0~20 mA

When changing the input mode, please check if the switch position of external terminal (ACI) is correct or not.

03-30 Status of PLC Analog Output Terminal

Factory Setting: Read only

Settings Monitor the status of PLC analog output terminals

bit 1: AFM
bit 2: AO10
bit 3: AO11

P. 03-30 shows the external multi-function output terminal that used by PLC.

0=ON
1=OFF

Weights	2^{15}	2^{14}	2^{13}	2^{12}	2^{11}	2^{10}	2^{9}	2^{8}	2^{7}	2^{6}	2^{5}	2^{4}	2^{3}	2^{2}	2^{1}	2^{0}	
Bit	15	14	13	12	11	10	9	8	7	6	5	4	3	2	1	0	← AFM

NOTE

$2^{7}=128$ $2^{6}=64$

$2^{5}=32$ $2^{4}=16$ $2^{3}=8$

$2^{2}=4$ $2^{1}=2$ $2^{0}=1$

For Example:

If the value of Pr. 03-30 displays 0002h (Hex), it means AFM is used by PLC.

0=Not used by PLC
1=Used by PLC

Weights	2^{7}	2^{6}	2^{5}	2^{4}	2^{3}	2^{2}	2^{1}	2^{0}	
Bit	0	0	0	0	0	0	1	0	← AFM

Display value

$2 = 1 \times 2^{1} + 0 \times 2^{0}$

$= \text{bit } 1 \times 2^{1} + \text{bit } 0 \times 2^{0}$

03-31 AFM Output Selection

Factory Setting: 0

Settings 0: 0~10 V output
1: 0~20 mA output
2: 4~20 mA output

03-32 AFM DC Output Setting Level

Factory Setting: 0.00

Settings 0.00~100.00 %

03-35 AFM Filter Output Time

Factory Setting: 0.01

Settings 0.00~20.00 Sec.

03-39 VR Input Selection

Factory Setting: 1

Settings 0：Disable
1：Frequency command

03-40 VR Input Bias

Factory Setting: 0.0

Settings -100~100 %

03-41 VR Positive / Negative Bias

Factory Setting: 0

Settings 0: No bias
1: Lower than or equal to bias
2: Greater than or equal to bias
3: The absolute value of the bias voltage while serving as the center
4: Serve bias as the center

03-42 VR Gain

Factory Setting: 100.0

Settings -500.0~500.0 %

03-43 VR Filter Time

Factory Setting: 0.01

Settings 0~2.00 sec.

03-44 Multi-function MO Output by Source of AI Level

Factory Setting: 0

Settings 0: AVI
1: ACI

03-45 AI Upper Level 1

Factory Setting: 50

Settings -100 %~100 %

03-46 AI Lower Level 2

Factory Setting: 10

Settings -100 %~100 %

- This function requires working with Multi-function Output item “67” Analog signal level achieved. The MO active when AI input level is higher than Pr. 03-45 AI Upper level. The MO shutoffs when the AI input is lower that Pr. 03-46 AI Lower level.
- AI Upper level must be higher than AI Lower level

03-50 Analog Input Curve Selection

Factory Setting: 0

Settings 0: Regular Curve
1: 3 point curve of AVI (& AI10)
2: 3 point curve of ACI (& AI11)
3: 3 point curve of AVI & ACI (& AI10 & AI11)
(AI10, AI11 is valid when extension card is installed)

03-57 ACI Lowest Point

Factory Setting: 4.00

Settings Pr. 03-29 = 1, 0.00~10.00 V
Pr. 03-29 ≠ 1, 0.00~20.00 mA

03-58 ACI Proportional Lowest Point

Factory Setting: 0.00

Settings 0.00~100.00 %

03-59 ACI Mid-point

Factory Setting: 12.00

Settings 03-29 = 1, 0.00~10.00 V
03-29 ≠ 1, 0.00~20.00 mA

03-60 ACI Proportional Mid-point

Factory Setting: 50.00

Settings 0.00~100.00 %

03-61 ACI Highest Point

Factory Setting: 20.00

Settings 03-29 = 1, 0.00~10.00 V
03-29 ≠ 1, 0.00~20.00 mA

03-62 ACI Proportional Highest Point

Factory Setting: 100.00

Settings 0.00~100.00 %

- When Pr. 03-29 = 1, ACI setting is 0-10 V and the unit is in voltage (V).
- When Pr. 03-29 ≠ 1, ACI setting is 0-20 mA or 4-20 mA and the unit is in current (mA).
- When setting analog input ACI to frequency command, it 100 % corresponds to Fmax (Pr. 01-00 Max. operation frequency).
- The 3 parameters (Pr. 03-57, Pr. 03-59 and Pr. 03-61) must meet the following argument: Pr. 03-57 < Pr. 03-59 < Pr. 03-61. The 3 proportional points (Pr. 03-58, Pr. 03-60 and Pr. 03-62) doesn’t have any limit. Between two points is a linear calculation.
- The output % will become 0 % when the ACI input value is lower than low point setting.

For example:

If Pr. 03-57 = 2 mA; Pr. 03-58 = 10 %, then the output will become 0 % when AVI input is ≦ 2mA. If the ACI input is swing between 2 mA and 2.1 mA, drive's output frequency will beats between 0 % and 10 %.

03-63 AVI Voltage Lowest Point

Factory Setting: 0.00

Settings 0.00~10.00 V

03-64 AVI Voltage Proportional Lowest Point

Factory Setting: 0.00

Settings -100.00~100.00 %

03-65 AVI Voltage Mid-point

Factory Setting: 5.00

Settings 0.00~10.00 V

03-66 AVI Voltage Proportional Mid-point

Factory Setting: 50.00

Settings -100.00~100.00 %

03-67 AVI Voltage Highest Point

Factory Setting: 10.00

Settings 0.00~10.00 V

03-68 AVI Voltage Proportional Highest Point

Factory Setting: 100.00

Settings -100.00~100.00 %

- When setting positive voltage AVI to frequency command, it 100 % corresponds to Fmax (Pr. 01-00 Max. operation frequency) and the motor runs in forward direction.
- The 3 parameters (Pr. 03-63, Pr. 03-65 and Pr. 03-67) must meet the following argument: Pr. 03-63 < Pr. 03-65 < Pr. 03-67. The 3 proportional points (Pr. 03-54, Pr. 03-66 and Pr. 03-68) doesn't have any limit. Between two points is a linear calculation.
- The output % will become 0 % when positive voltage AVI input value is lower than low point setting.

  For example:

  If Pr. 03-63 = 1V; Pr. 03-64 = 10 %, then the output will become 0 % when AVI input is ≤ 1 V. If input is swing between 1 V and 1.1 V, drive's output frequency will beats between 0% and 10%.

03-69 Negative AVI Voltage Lowest Point

Factory Setting: 0.00

Settings 0.00~ -10.00 V

(valid when Pr. 03-28 set as -10 V ~ +10 V)

03-70 Negative AVI Voltage Proportional Lowest Point

Factory Setting: 0.00

Settings -100.00~100.00 %
(valid when Pr. 03-28 set as -10 V ~ +10 V)

03-71 Negative AVI Voltage Mid-point

Factory Setting: -5.00

Settings 0.00~ -10.00 V
(valid when Pr. 03-28 set as -10 V ~ +10 V)

03-72 Negative AVI Voltage Proportional Mid-point

Factory Setting: -50.00

Settings -100.00~100.00 %
(valid when Pr. 03-28 set as -10 V ~ +10 V)

03-73 Negative AVI Voltage Highest Point

Factory Setting: -10.00

Settings 0.00~ -10.00 V
(valid when Pr. 03-28 set as -10 V ~ +10 V)

03-74 Negative AVI Voltage Proportional Highest Point

Factory Setting: -100.00

Settings -100.00~100.00 %
(valid when Pr. 03-28 set as -10 V ~ +10 V)

- When setting negative voltage AVI to frequency command, it -100 % corresponds to Fmax (Pr. 01-00 Max. operation frequency) and the motor runs in reverse direction.
- The 3 parameters (Pr. 03-69, Pr. 03-71 and Pr. 03-73) must meet the following argument: Pr. 03-69 < Pr. 03-71 < Pr. 03-73 The 3 proportional points (Pr. 03-70, Pr. 03-72 and Pr. 03-74) doesn't have any limit. Between two points is a linear calculation.
- The output % will become 0% when the negative AVI input value is lower than low point setting. For example:
  If Pr. 03-63 = -1V; Pr. 03-64 = 10 %, then the output will become 0% when AVI input is ≧ -1V. If the AVI input is swing between -1V and -1.1V, drive's output frequency will beats between 0 % and 10 %.

04 Multi-stage Speed Parameters

✎ This parameter can be set during operation.

✎ 04-00	1st Stage Speed Frequency
✎ 04-01	2nd Stage Speed Frequency
✎ 04-02	3rd Stage Speed Frequency
✎ 04-03	4th Stage Speed Frequency
✎ 04-04	5th Stage Speed Frequency
✎ 04-05	6th Stage Speed Frequency
✎ 04-06	7th Stage Speed Frequency
✎ 04-07	8th Stage Speed Frequency
✎ 04-08	9th Stage Speed Frequency
✎ 04-09	10th Stage Speed Frequency
✎ 04-10	11th Stage Speed Frequency
✎ 04-11	12th Stage Speed Frequency
✎ 04-12	13th Stage Speed Frequency
✎ 04-13	14th Stage Speed Frequency
✎ 04-14	15th Stage Speed Frequency

Factory Setting: 0.00

Settings 0.00~599.00 Hz

📖 The multi-function input terminals (refer to setting 1~4 of Pr. 02-01~02-07 Multi-function input command) are used to select multi-stage speed command (max. is 15th stage speed). The multi-stage speed (frequency) is set by Pr. 04-00 to 04-14 as shown in the following diagram.

📖 The run / stop command can be controlled by the external terminal / digital keypad / communication via Pr. 00-21.

📖 Each multi-stage speed can be set within 0.00~599.00 Hz during operation.

📖 Explanation for the timing diagram of multi-stage speed and external terminals

The related parameter settings are:

1. Pr. 04-00~04-14: setting 1st ~15th multi-stage speed (to set the frequency of each stage speed)
2. Pr. 02-01~02-07: setting multi-function input terminals (multi-stage speed command 1~4)

📖 Related parameters:

- 01-22 JOG frequency setting
- 02-01 multi-function input command 1 (MI1)
- 02-02 multi-function input command 2 (MI2)
- 02-03 multi-function input command 3 (MI3)
- 02-04 multi-function input command 4 (MI4)

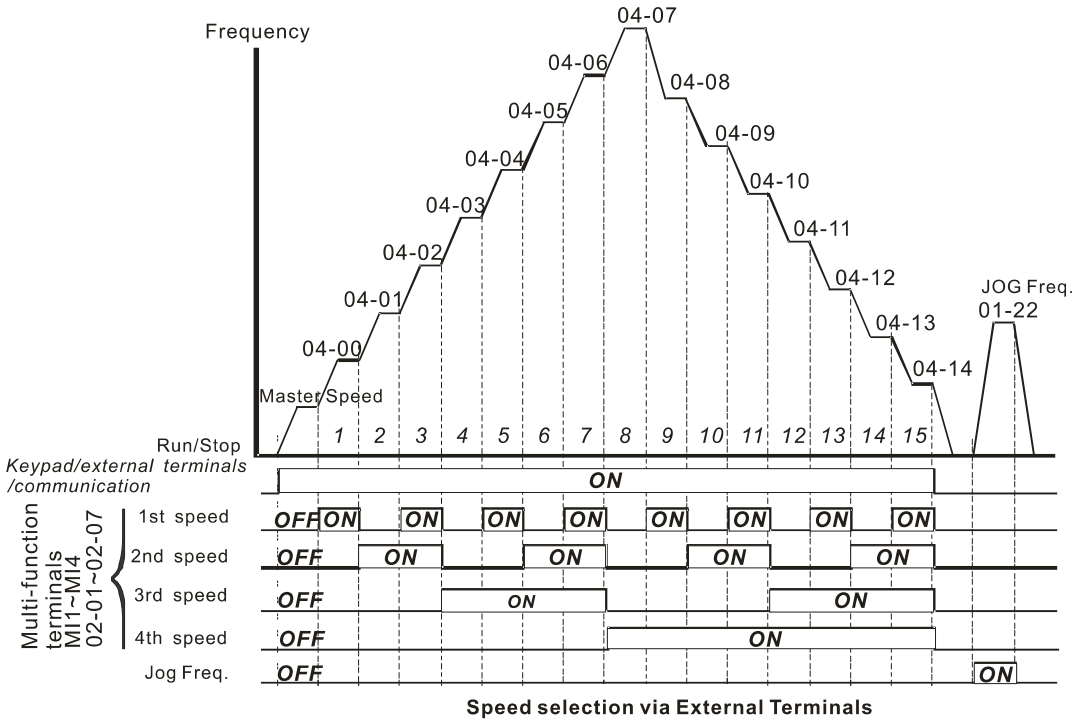

Speed selection via External Terminals

04-50	PLC Buffer 0
04-51	PLC Buffer 1
04-52	PLC Buffer 2
04-53	PLC Buffer 3
04-54	PLC Buffer 4
04-55	PLC Buffer 5
04-56	PLC Buffer 6
04-57	PLC Buffer 7
04-58	PLC Buffer 8
04-59	PLC Buffer 9
04-60	PLC Buffer 10
04-61	PLC Buffer 11
04-62	PLC Buffer 12
04-63	PLC Buffer 13
04-64	PLC Buffer 14
04-65	PLC Buffer 15
04-66	PLC Buffer 16
04-67	PLC Buffer 17
04-68	PLC Buffer 18
04-69	PLC Buffer 19

Factory Setting: 0

Settings 0~65535

PLC buffer can be combined with built-in PLC function for a variety of applications.

05 Motor Parameters

✎ This parameter can be set during operation.

05-00 Motor Parameter Auto Tuning

Factory Setting: 0

Settings 0: No function
1: Dynamic test for induction motor (IM)
2: Static test for induction motor (IM)
13: High frequency stall test for PM synchronous motor

05-01 Full-load Current of Induction Motor 1 (A)

Unit: Ampere
Factory Setting: #.##

Settings 10~120 % of drive's rated current

📖 This value should be set according to the rated current of the motor as indicated on the motor nameplate. The factory setting is 90 % of rated current.
Example: The rated current of 7.5 HP (5.5 kW) is 25 A, the factory setting is 22.5 A.
The setting range will be 2.5~30 A. (25 × 10 % = 2.5 A and 25 × 120 % = 30 A)

✎ 05-02 Rated Power of Induction Motor 1 (kW)

Factory Setting: #.##

Settings 0~655.35 kW

📖 It is used to set rated power of motor 1. Factory setting is the power value of drive.

✎ 05-03 Rated Speed of Induction Motor 1 (rpm)

Factory Setting: 1710

Settings 0~65535
1710 (60 Hz 4 poles); 1410 (50 Hz 4 poles)

📖 It is used to set the rated speed of the motor according to motor nameplate.

05-04 Pole Number of Induction Motor 1

Factory Setting: 4

Settings 2~20

📖 It is used to set the number of motor poles (must be an even number).
📖 Set up Pr. 01-01 and Pr. 05-03 before setting up Pr. 05-04 to make sure motor operates normally.

05-05 No-load Current of Induction Motor 1 (A)

Unit: Ampere
Factory Setting: #.##

Settings 0~Pr. 05-01 factory setting

📖 The factory setting is 40 % of the motor rated current.

05-06 Stator Resistance (Rs) of Induction Motor 1
05-07 Rotor Resistance (Rr) of Induction Motor 1

Factory Setting: #.###

Settings 0~65.53 5 Ω

05-08 Magnetizing Inductance (Lm) of Induction Motor 1
05-09 Stator inductance (Lx) of Induction Motor 1

Factory Setting: #.#

Settings 0~6553.5 mH

05-13 Full-load Current of Induction Motor 2 (A)

Unit: Ampere

Factory Setting: #.##

Settings 10~120 % of drive's rated current

This value should be set according to the rated frequency of the motor as indicated on the motor nameplate. The factory setting is 90 % of rated current.

Example: The rated current of 7.5 HP (5.5 kW) is 25 A, the factory setting is 22.5 A.

The setting range will be 2.5~30 A. (25 × 10 % = 2.5 A and 25 × 120 % = 30 A)

05-14 Rated Power of Induction Motor 2 (kW)

Factory Setting: #.##

Settings 0~655.35 kW

It is used to set rated power of motor 2. Factory setting is the power value of drive.

05-15 Rated Speed of Induction Motor 2 (rpm)

Factory Setting: 1710

Settings 0~65535

1710 (60 Hz 4 poles); 1410 (50 Hz 4 poles)

It is used to set the rated speed of the motor according to motor nameplate.

05-16 Pole Number of Induction Motor 2

Factory Setting: 4

Settings 2~20

It is used to set the number of motor poles (must be an even number).

Set up Pr. 01-35 and Pr. 05-15 before setting up Pr. 05-04 to make sure motor operates normally.

05-17 No-load Current of Induction Motor 2 (A)

Unit: Ampere

Factory Setting: #.##

Settings 0~ Pr. 05-13 factory setting

The factory setting is 40 % of the motor rated current.

05-18	Stator Resistance (Rs) of Induction Motor 2
05-19	Rotor Resistance (Rr) of Induction Motor 2

Factory Setting: #.###

Settings 0~65.535 Ω

05-20	Magnetizing Inductance (Lm) of Induction Motor 2
05-21	Stator Inductance (Lx) of Induction Motor 2

Factory Setting: #.#

Settings 0~6553.5 mH

05-22	Multi-motors (Induction) Selection

Factory Setting: 1

Settings 1: Motor 1
2: Motor 2
3: Motor 3 (VF or SVC control mode only)
4: Motor 4 (VF or SVC control mode only)

📖 It is used to set the motor that driven by the AC motor drive. Multi-motors selection only supports single control mode. For example: When motor 1 is set as SVC control mode, the control mode of motor 2 ~ 4 is also set as SVC.

05-23	Frequency for Y-connection /△-connection Switch of Induction Motor

Factory Setting: 60.00

Settings 0.00~599.00 Hz

05-24	Y-connection /△-connection Switch of Induction Motor IM

Factory Setting: 0

Settings 0: Disable
1: Enable

05-25	Delay Time for Y-connection/△-connection Switch of Induction Motor

Factory Setting: 0.200

Settings 0.000~60.000 sec.

📖 Pr. 05-23~Pr. 05-25 are applied in the wide range motors and the motor coil will execute the switch of Y-connection / Δ-connection as required. (The wide range motors are related to the motor design. In general, it has higher torque at low speed with Y-connection and has higher speed at high speed with Δ-connection)

📖 Pr. 05-24 is used to enable / disable the switch of Y-connection / Δ-connection.

📖 When Pr. 05-24 is set to 1, the drive will select by Pr. 05-23 setting and current motor frequency, and switch current motor to Y-connection or Δ-connection. Relevant parameter settings of the motor can be switched simultaneously.

📖 Pr. 05-25 is used to set the switch delay time of Y-connection / Δ-connection.

📖 When output frequency reaches Y-connection / Δ-connection switch frequency, drive will delay by Pr. 05-25 before multi-function output terminals are active.

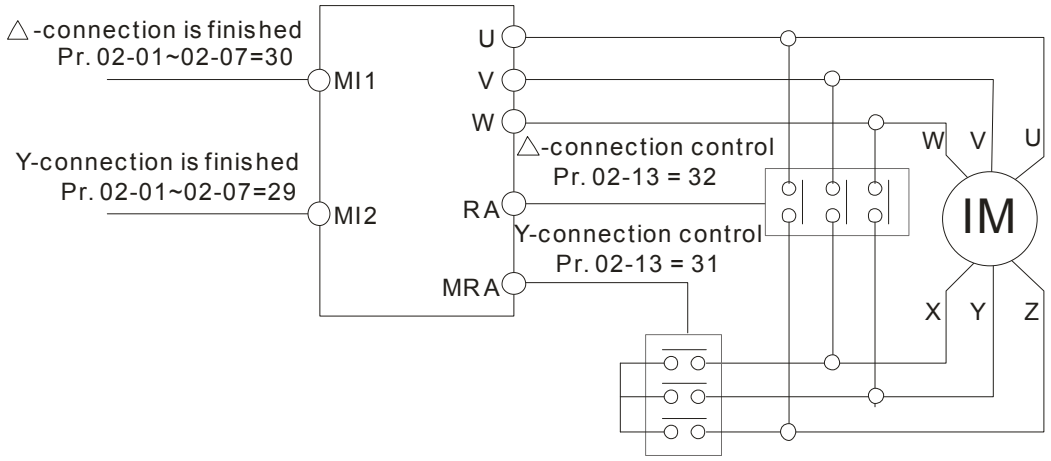

Y- △connection switch: can be used for wide range motor
Y -connection for low speed: higher torque can be used for rigid tapping

△-connection for high speed: higher torque can be used for high-speed drilling

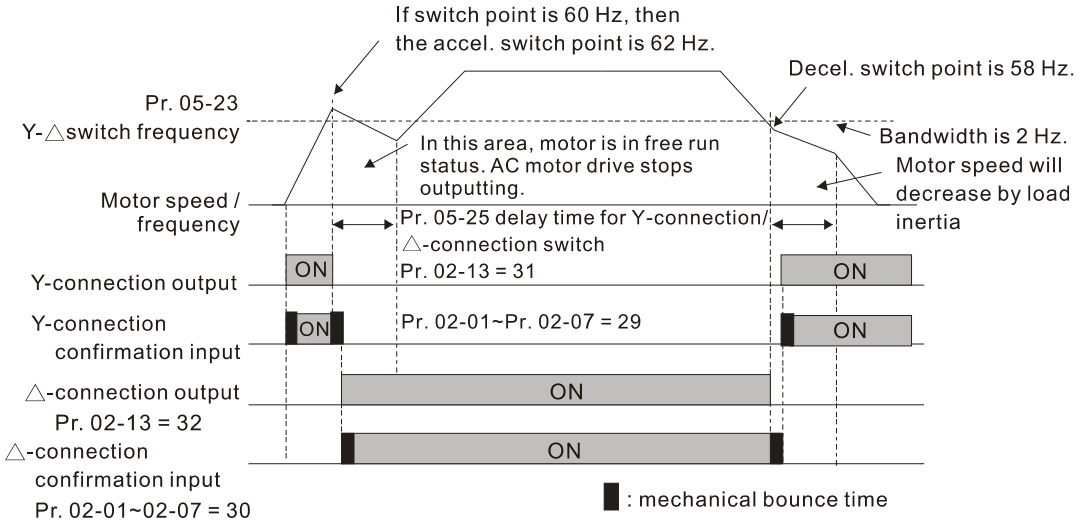

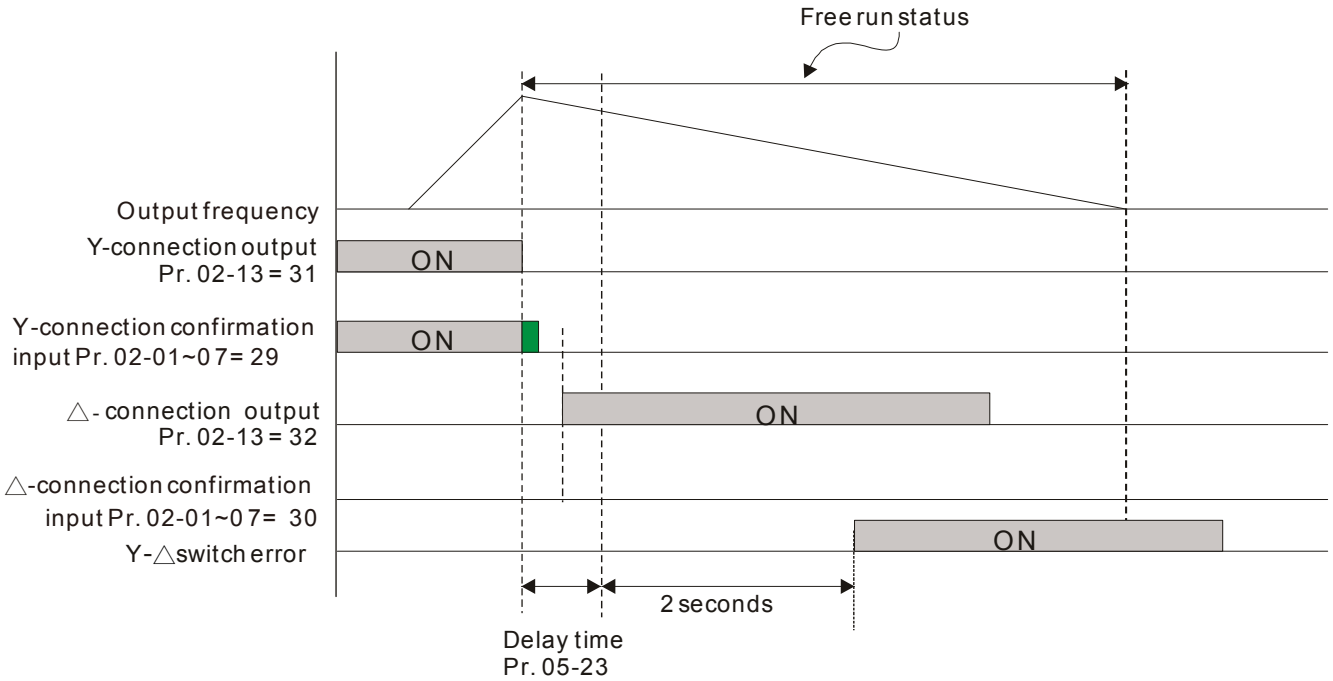

05-26	Accumulative Watt-second of Motor in Low Word (W-sec)
05-27	Accumulative Watt-second of Motor in High Word (W-sec)
05-28	Accumulative Watt-hour of Motor (W-Hour)
05-29	Accumulative Watt-hour of Motor in Low Word (KW-Hour)
05-30	Accumulative Watt-hour of Motor in High Word (KW-Hour)

Factory Setting: 0.0

Settings Read only

📖 Pr. 05-26~05-30 records the amount of power consumed by motors. The accumulation begins when the drive is activated and record is saved when the drive stops or turns OFF. The amount of consumed watts will continue to accumulate when the drive is activated again. To clear the accumulation, set Pr. 00-02 to 5 then the accumulation record will return to 0.

📖 Accumulated total watts of motor per second = Pr. 05-27 x 65536 + Pr. 05-26

Example: When Pr. 05-26 = 2548.1 and Pr. 05-27 = 15.2, the accumulated total watts of motor per second = 15.2 x 65536 + 2548.1 = 996147.2 + 2548.1 = 998695.3

📖 Accumulated total kilowatts of motor per hour = Pr. 05-30 x 65536 + Pr. 05-29

Example: When Pr. 05-29 = 3361.4 and Pr. 05-30 = 11.2, the accumulated total kilowatts of motor per hour = 11.2 x 65536 + 3361.4 = 734003.2 + 3361.4 = 737346.6

05-31 Accumulative Motor Operation Time (Min.)

Factory Setting: 0

Settings 00~1439

05-32 Accumulative Motor Operation Time (Day)

Factory Setting: 0

Settings 00~65535

📖 Pr. 05-31 and Pr. 05-32 are used to record the motor operation time. To clear the operation time, set Pr. 05-31 and Pr. 05-32 to 00. Operation time shorter than 60 seconds will not be recorded.

05-33 Induction Motor (IM) or Permanent Magnet Synchronous Motor Selection

Factory Setting: 0

Settings 0: Induction Motor
1: SPM
2: IPM

05-34 Full-load current of Permanent Magnet Synchronous Motor

Factory Setting: #.#

Settings 0~120 % of drive's rated current

05-35 Rated Power of Permanent Magnet Synchronous Motor

Factory Setting: #.#

Settings 0.00~655.35 kW

It is used to set rated power of permanent magnet synchronous motor. Factory setting is the power value of drive.

05-36 Rated speed of Permanent Magnet Synchronous Motor

Factory Setting: 2000

Settings 0~65535 rpm

05-37 Pole number of Permanent Magnet Synchronous Motor

Factory Setting: 10

Settings 0~65535

05-39 Stator Resistance of Permanent Magnet Synchronous Motor

Factory Setting: 0.000

Settings 0.000~65.535 Ω

05-40 Permanent Magnet Synchronous Motor Ld

Factory Setting: 0.00

Settings 0.00~655.35 mH

05-41 Permanent Magnet Synchronous Motor Lq

Factory Setting: 0.00

Settings 0.00~655.35 mH

05-43 Ke parameter of Permanent Magnet Synchronous Motor

Unit: V / 1000 rpm

Factory Setting: 0

Settings 0~65535

05-64 Full-load Current of Induction Motor 3 (A)

Unit: Ampere

Factory Setting: #.##

Settings 10~120 % of drive's rated current

Set this parameter according to nameplate of motor. The factory setting is 90 % of rated current.

Example: The rated current of 7.5 HP (5.5 kW) is 25 A, the factory setting is 22.5 A.

The setting range will be 2.5~30 A. (25 × 10 % = 2.5 A and 25 × 120 % = 30 A)

05-65 Rated Power of Induction Motor 3 (kW)

Factory Setting: #.##

Settings 0~655.35 kW

It is used to set rated power of motor 3. Factory setting is the power value of drive.

05-66 Rated Speed of Induction Motor 3 (rpm)

Factory Setting: 1710

Settings 0~65535
1710 (60 Hz 4 poles); 1410 (50 Hz 4 poles)

It is used to set the rated speed of the motor according to motor nameplate.

05-67 Pole Number of Induction Motor 3

Factory Setting: 4

Settings 2~20

It is used to set the number of motor poles (must be an even number).

Set up Pr. 01-54 and Pr. 05-66 before setting up Pr. 05-67 to make sure motor operates normally.

05-68 No-load Current of Induction Motor 3 (A)

Unit: Ampere

Factory Setting: #.##

Settings 0~ Pr. 05-64 factory setting

The factory setting is 40 % of the motor rated current.

05-69 Stator Resistance (Rs) of Induction Motor 3

Factory Setting: #.###

Settings 0~65.535 Ω

05-70 Full-load Current of Induction Motor 4 (A)

Unit: Ampere

Factory Setting: #.##

Settings 10~120 % of drive's rated current

This value should be set according to the rated frequency of the motor as indicated on the motor nameplate. The factory setting is 90 % of rated current.

Example: The rated current of 7.5 HP (5.5 kW) is 25 A, the factory setting is 22.5 A.
The setting range will be 2.5~30 A. (25 × 10 % = 2.5 A and 25 × 120 % = 30 A)

05-71 Rated Power of Induction Motor 4 (kW)

Factory Setting: #.##

Settings 0~655.35 kW

It is used to set rated power of motor 4. Factory setting is the power value of drive.

05-72 Rated Speed of Induction Motor 4 (rpm)

Factory Setting: 1710

Settings 0~65535
1710 (60 Hz 4 poles); 1410 (50 Hz 4 poles)

It is used to set the rated speed of the motor according to motor nameplate.

05-73 Pole Number of Induction Motor 4

Factory Setting: 4

Settings 2~20

- It is used to set the number of motor poles (must be an even number).
- Set up Pr. 01-63 and Pr. 05-72 before setting up Pr. 05-73 to make sure motor operates normally.

05-74 No-load Current of Induction Motor 4 (A)

Unit: Ampere

Factory Setting: #.##

Settings 0~ Pr. 05-70 factory setting

- The factory setting is 40 % of the motor rated current.

05-75 Stator Resistance (Rs) of Induction Motor 4

Factory Setting: #.###

Settings 0~65.535 Ω

06 Protection Parameters (1)

✓ This parameter can be set during operation.

✓ 06-00 Low Voltage Level

		Factory Setting:
Settings	110V / 230V: 150.0~220.0 Vdc	180.0
	460V: 300.0~440.0 Vdc	360.0

- This parameter is used to set the Low Voltage (LV) level. When the DC BUS voltage is lower than Pr. 06-00, drive will stop output and free to stop.
- If LV fault is triggered during operation, the drive will stop output and free to stop. There are three LV faults, LvA (LV during acceleration), Lvd (LV during deceleration), and Lvn (LV in constant speed) which will be triggered according to the status of acceleration / deceleration. These faults need to be RESET manually to restart the drive, while setting restart after momentary power off function (Refer to Pr. 07-06 and Pr. 07-07), the drive will restart automatically.
- If LV fault is triggered when the drive is in stop status, the drive will display LvS (LV during stop), which will not be recorded, and the drive will restart automatically when input voltage is higher than LV level 30V (230V series) or 60V (460V series).

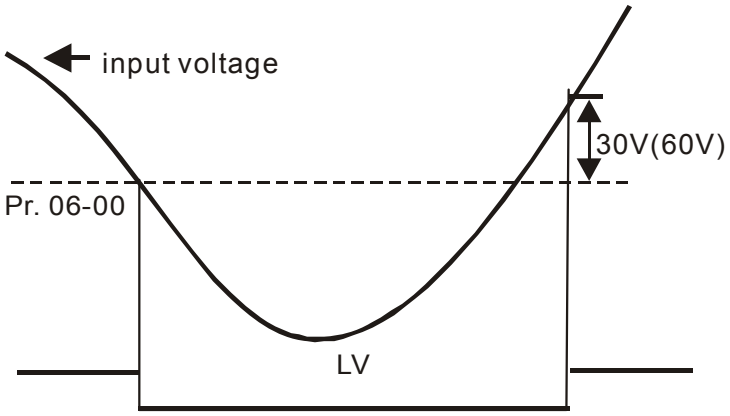

✓ 06-01 Over-voltage Stall Prevention

		Factory Setting:
Settings	0: Disabled	
	110V / 230V: 0.0~450.0 Vdc	380.0
	460V: 0.0~900.0 Vdc	760.0

- When Pr. 06-01 is set to 0.0, the over-voltage stall prevention function is disabled (connected with braking unit or braking resistor). This setting is recommended when braking units or resistors are connected to the drive.
- When the setting value is not 0.0, the over-voltage stall prevention is activated. This setting should refer to power supply system and loading. If the setting is too low, then over-voltage stall prevention will be easily activated, which may increase deceleration time.
- Related parameters: Pr. 01-13, Pr. 01-15, Pr. 01-17, Pr. 01-19 Decel. Time 1~4, Pr. 02-13 Multi-function output (Relay), Pr. 02-16~Pr. 02-17 Multi-function output (MO1, 2), and Pr. 06-02 Selection for over-voltage stall prevention.

06-02 Selection for Over-voltage Stall Prevention

Factory Setting: 0

Settings 0: Traditional over-voltage stall prevention
1: Smart over-voltage stall prevention

This function is used for the occasion that the load inertia is unsure. When it stops in normal load, the over-voltage won't occur during deceleration and meet the setting of deceleration time. Sometimes, it may not stop due to over-voltage during decelerating to stop when increasing the load regenerative inertia. At this moment, the AC motor drive will extend the deceleration time automatically until the drive stops.

When Pr. 06-02 is set to 0: During deceleration, the motor will exceed the synchronous speed due to load inertia. In this case the motor becomes an electric generator. The DC bus voltage may exceed its maximum allowable value due to motor regeneration in some situation, such as loading inertia is too high or Decel. Time is set too short. When traditional over-voltage stall prevention is enabled and the DC voltage detected is too high, the drive will stop decelerating (output frequency remains unchanged) until the DC voltage drops below the setting value again.

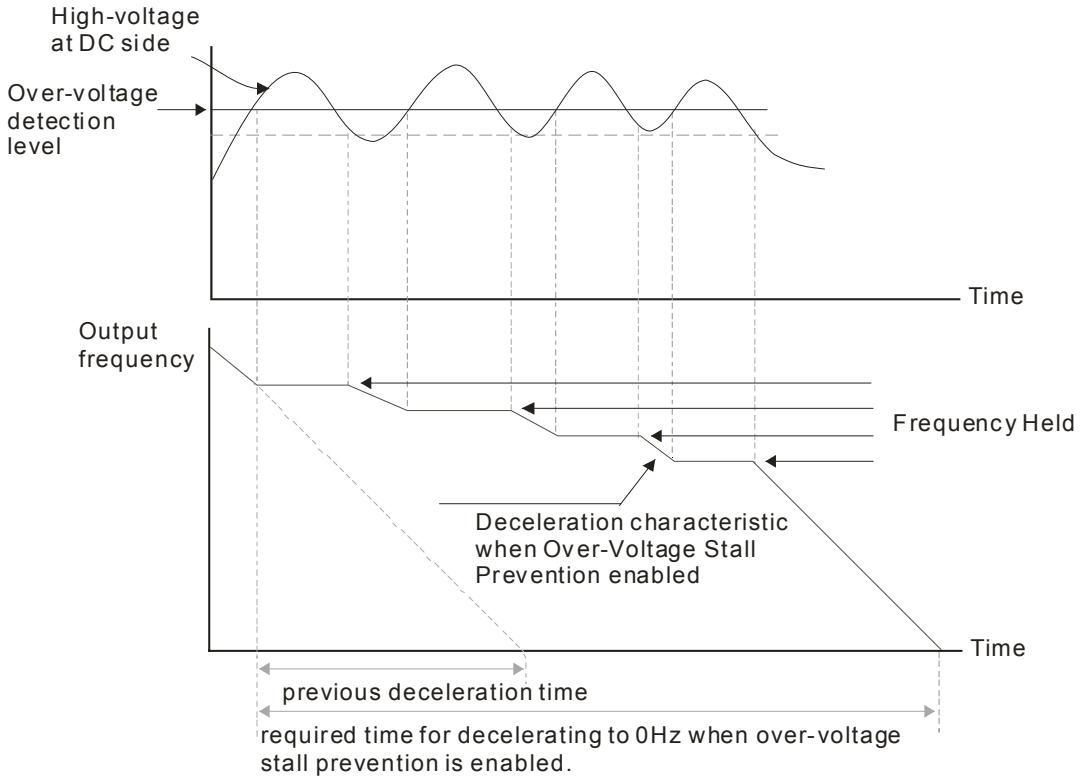

When Pr. 06-02 is set to 1: When use smart over-voltage stall prevention during deceleration, the drive will maintain DC bus voltage when decelerating and prevent the drive from OV.

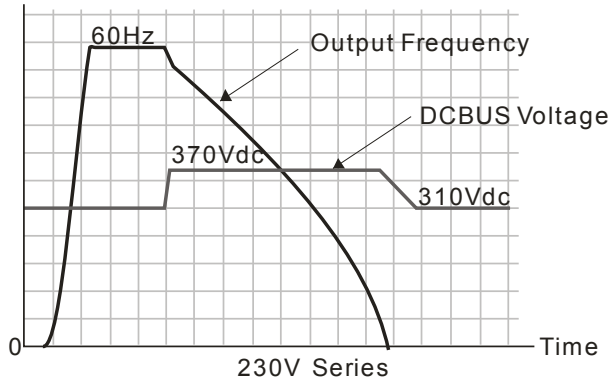

- When the over-voltage stall prevention is enabled, drive deceleration time will be longer than the setting.
- When there is any problem as using deceleration time, refer to the following items to solve it.
  1. Increase suitable deceleration time.
  2. Install brake resistor (refer to Chapter 7-1 for details) to dissipate the electrical energy that regenerated from the motor as the form of heat.
- Related parameters: Pr. 01-13, Pr. 01-15, Pr. 01-17, Pr. 01-19 Decel. Time 1~4, Pr. 02-13 Multi-function output (Relay), Pr. 02-16~Pr. 02-17 Multi-function output (MO1, 2), and Pr. 06-01 over-voltage stall prevention.

06-03 Over-current Stall Prevention during Acceleration

		Factory Setting:
Settings	Normal Load: 0~150 % (100 % corresponds to the rated current of the drive)	120
	Heavy Load: 0~200 % (100 % corresponds to the rated current of the drive)	180

- This parameter only works in VF, VFPG, and SVC mode.
- If the motor load is too large or acceleration time of drive is too short, the output current of drive may be too high during acceleration, and it may cause motor damage or trigger protection functions (OL or OC). This parameter is used to prevent these situations.
- During acceleration, the output current of drive may increase abruptly and exceed the setting value of Pr. 06-03. The drive will stop accelerating and keep the output frequency constant, and continues to accelerate after the output current drops.
- When the over-current stall prevention is enabled, the acceleration time of drive will be longer than the setting.
- When the over-current stall prevention occurs due to the motor capacity is too small or operates in the factory setting, please decrease Pr. 06-03 setting value.
- When there is any problem by using acceleration time, refer to the following items to solve it.
  1. Increase suitable deceleration time.
  2. Setting Pr.01-44 Auto Acceleration / Deceleration Setting to 1, 3 or 4 (auto accel.)
  3. Related parameters: Pr. 01-12, 01-14, 01-16, 01-18 (settings of accel. time 1~4), Pr. 01-44 Auto Acceleration / Deceleration Setting, Pr. 02-13 Multi-function Output (Relay), Pr. 02-16~02-17 Multi-function Output (MO1, 2)

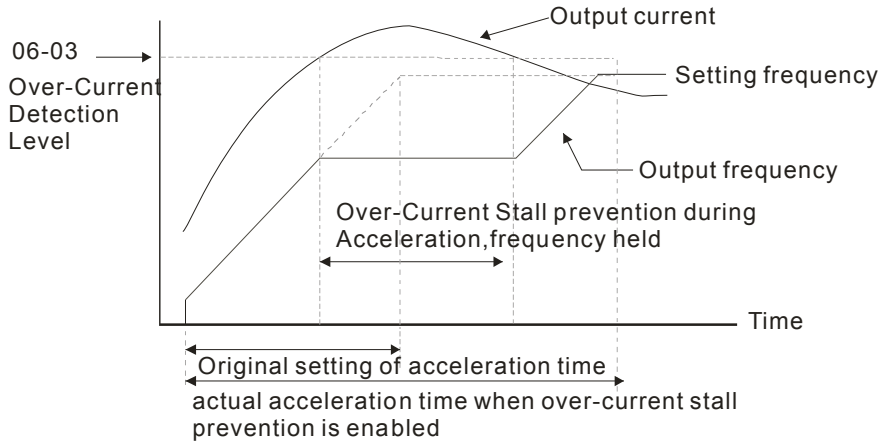

06-04 Over-current Stall Prevention during Operation

		Factory Setting:
Settings	Normal duty: 0~150 % (100 % corresponds to the rated current of the drive)	120
	Heavy duty: 0~200 % (100 % corresponds to the rated current of the drive)	180

- This parameter only works in VF, VFPG, and SVC mode.
- It is a protection for drive to decrease output frequency automatically when the motor is over-load abruptly during motor constant operation.
- If the output current exceeds the setting value of Pr. 06-04 when the drive is operating, the drive will decrease output frequency (according to Pr. 06-05) to prevent the motor from stall. If the output current is lower than the setting value of Pr. 06-04, the drive will accelerate (according to Pr. 06-05) again to the setting frequency.

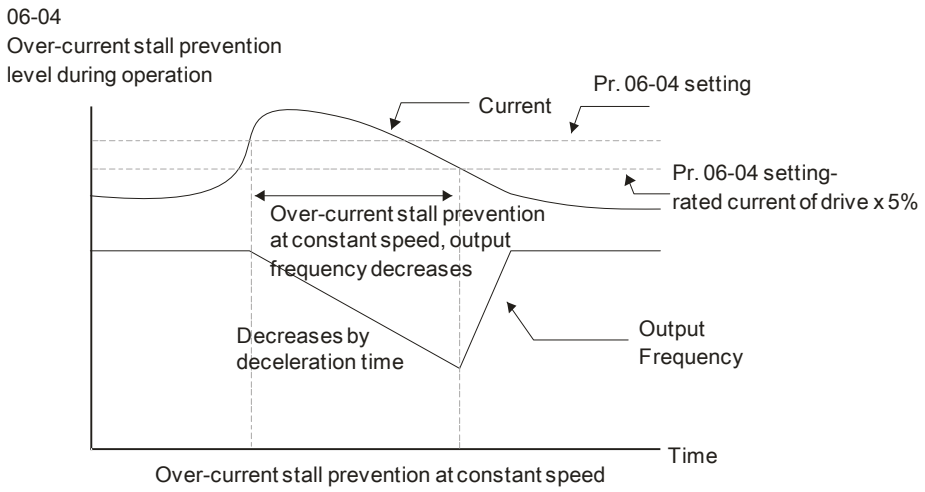

06-05 Accel. / Decel. Time Selection of Stall Prevention at Constant Speed

Factory Setting: 0

Settings
0: By current accel. / decel. time
1: By the 1st accel. / decel. time
2: By the 2nd accel. / decel. time
3: By the 3rd accel. / decel. time
4: By the 4th accel. / decel. time
5: By auto accel. / decel.

- It is used to set the accel. / decel. time selection when stall prevention occurs at constant speed.

06-06 Over-torque Detection Selection (Motor 1)

Factory Setting: 0

Settings
0: No function
1: Continue operation after Over-torque detection during constant speed operation
2: Stop after Over-torque detection during constant speed operation
3: Continue operation after Over-torque detection during RUN
4: Stop after Over-torque detection during RUN

06-09 Over-torque Detection Selection (Motor 2)

Factory Setting: 0

Settings 0: No function
1: Continue operation after Over-torque detection during constant speed operation
2: Stop after Over-torque detection during constant speed operation
3: Continue operation after Over-torque detection during RUN
4: Stop after Over-torque detection during RUN

- When Pr. 06-06 and Pr. 06-09 are set to 1 or 3, warning message will be displayed but there will not be an abnormal record.
- When Pr. 06-06 and Pr. 06-09 are set to 2 or 4, warning message will be displayed and there will be an abnormal record.

06-07 Over-torque Detection Level (Motor 1)

Factory Setting: 120

Settings 10 to 250 % (100 % corresponds to the rated current of the drive)

06-08 Over-torque Detection Level (Motor 1)

Factory Setting: 0.1

Settings 0.0~60.0 sec.

06-10 Over-torque Detection Level (Motor 2)

Factory Setting: 120

Settings 10~250 % (100 % corresponds to the rated current of the drive)

06-11 Over-torque Detection Time (Motor 2)

Factory Setting: 0.1

Settings 0.0~60.0 sec.

- When the output current exceeds over-torque detection level (Pr. 06-07 or Pr. 06-10) and also exceeds over-torque detection time (Pr. 06-08 or Pr. 06-11), the over-torque detection will follow the setting of Pr. 06-06 and Pr. 06-09.
- When Pr. 06-06 or Pr. 06-09 is set to 1 or 3, there will be ot1 / ot2 warning displayed while the drive will keep running. The warning will be off only until the output current is smaller than 5 % of the over-torque detection level.

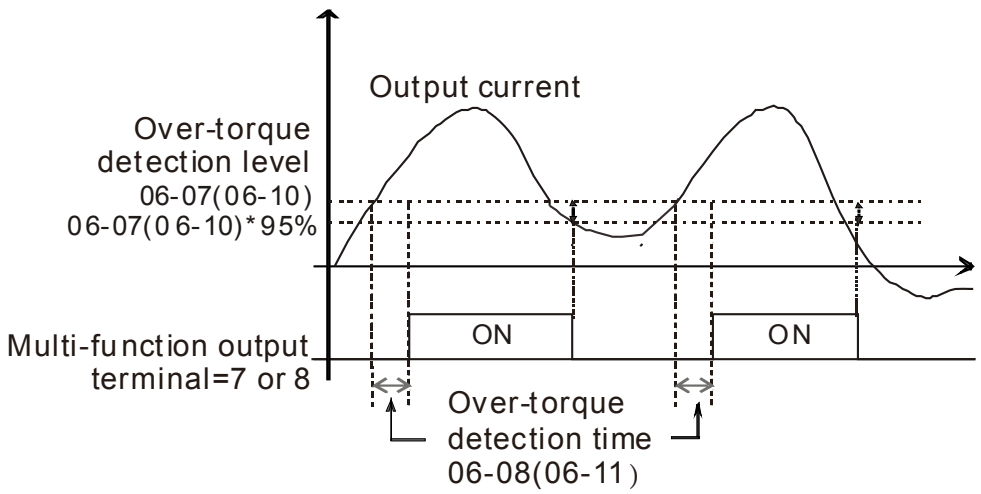

📖 When Pr. 06-06 or Pr. 06-09 is set to 2 or 4, there will be ot1 / ot2 warning displayed and the drive will stop running after over-torque detection. The drive will keep running after manually reset.

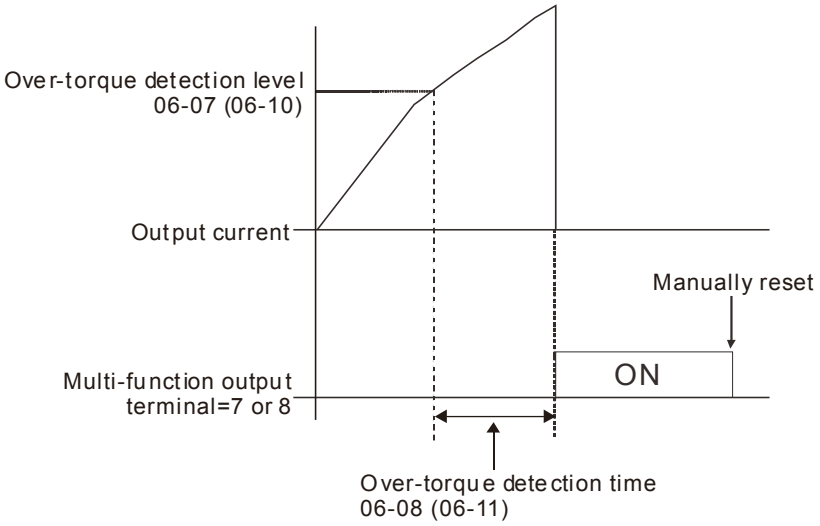

06-13 Electronic Thermal Relay Selection 1 (Motor 1)
06-27 Electronic Thermal Relay Selection 2 (Motor 2)

Factory Setting: 2

Settings 0: Inverter motor (with external forced cooling)
1: Standard motor (motor with fan on the shaft)
2: Disable

📖 It is used to prevent self-cooled motor overheats under low speed. User can use electronic thermal relay to limit the output power of drive.

📖 Setting as 0 is suitable for Inverter motor (motor fan using independent power supply). For this kind of motor, there is no significant correlation between cooling capacity and motor speed. Therefore the action of electronic thermal relay will remain stable in low speed to ensure the load capability of motor in low speed.

📖 Setting as 1 is suitable for standard motor (motor fan is fixed on the rotor shaft). For this kind of motor, the cooling capacity is lower in low speed. Therefore the action of electronic thermal relay will reduce the action time to ensure the life of motor.

📖 When the power ON / OFF is switched frequently, if the power is switched OFF, the electronic thermal relay protection will be reset. Therefore even setting as 0 or 1 may not protect the motor well. If there are several motors connected to one drive, please install electronic thermal relay in each motor respectively.

06-14 Electronic Thermal Relay Action Time 1 (Motor 1)
06-28 Electronic Thermal Relay Action Time 2 (Motor 2)

Factory Setting: 60.0

Settings 30.0~600.0 sec.

📖 The parameter is set by 150 % of motor rated current and used with the setting of Pr. 06-14 and Pr. 06-28 to prevent the motor from damage due to overheating. When it reaches the setting, the drive will display “EoL1 / EoL2”, and the motor will be free running to stop.

This parameter is to set the action time of electronic thermal relay. It works based on the I2t characteristic curve of electronic thermal relay, output frequency and current of drive, and operation time to prevent motor from overheating.

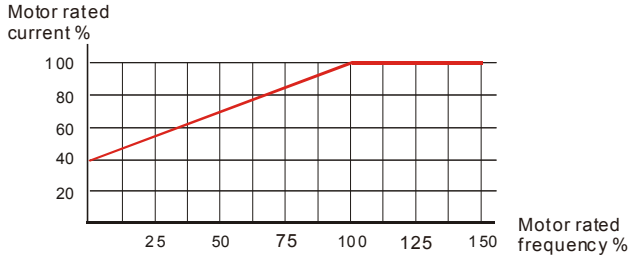

Motor cooling curve with shaft-fixed fan

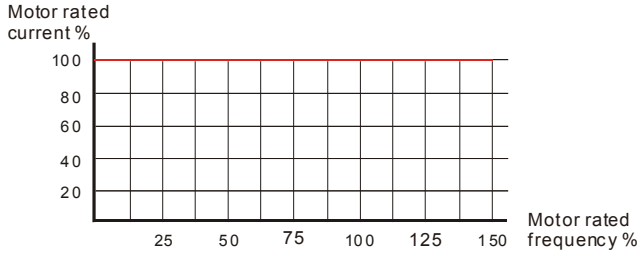

Motor cooling curve with independent fan

The action of electronic thermal relay depends on the setting of Pr. 06-13 and Pr. 06-27.

1. Pr. 06-13 or Pr. 06-27 is set 0 (using inverter motor):
   When output current of drive is higher than 150 % of motor rated current (refer to motor cooling curve with independent fan), the drive will start to count the time. Electronic thermal relay will act when the accumulated time exceeds Pr. 06-14 or Pr. 06-28.
2. Pr. 06-13 or Pr. 06-27 is set 0 (using standard motor):
   When output current of the drive is higher than 150 % of motor rated current (refer to motor cooling curve with shaft-fixed fan), the drive will start to count the time. Electronic thermal relay will act when the accumulated time exceeds Pr. 06-14 or Pr. 06-28.
   The actual electronic thermal relay action time will adjust according to drive output current (shown as motor loading rate %). The action time is short when the current is high, and the action time is long when the current is low. Please refer to the following chart:

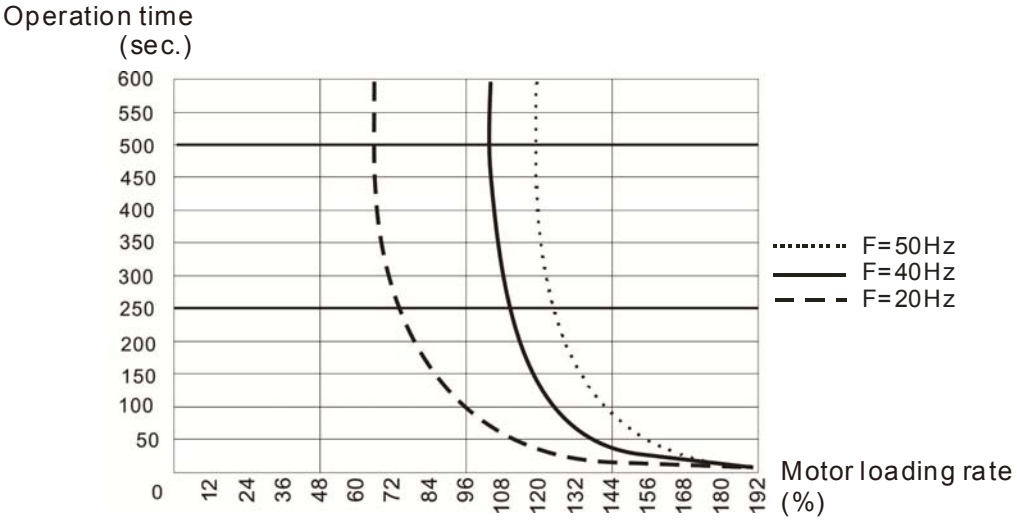

06-15 Temperature Level Over-heat (OH) Warning

Factory Setting: 105.0

Settings 0.0~110.0 °C

The factory setting of this parameter is 105 °C. When using Heavy Duty or Sensorless control mode, the OH warning will be disabled if Pr. 06-15 is not reduced. When the temperature reaches 100 °C, the drive will stop with IGBT over-heat fault.

When using control mode except Normal Duty or Sensorless mode, if Pr. 06-15 is set to 110 °C. When the temperature reaches 110 °C, the drive will stop with IGBT over-heat fault.

06-16 Stall Prevention Limit Level

Factory Setting: 100

Settings 0~100 % (Refer to Pr. 06-03, Pr. 06-04)

Over-current stall prevention level when operation frequency is larger than Pr. 01-01.

Example: When Pr. 06-03 = 150 %, Pr. 06-04 = 100 % and Pr. 06-16 = 80 %.

The over-current stall prevention level during acceleration:

Pr. 06-03 * Pr. 06-16 = 150 x 80 % = 120 %.

The over-current stall prevention level during operating:

Pr. 06-04 * Pr. 06-16 = 100 x 80 % = 80 %.

06-17 Fault Record 1

06-18 Fault Record 2

06-19 Fault Record 3

06-20 Fault Record 4

06-21 Fault Record 5

06-22 Fault Record 6

Factory Setting: 0

Settings
0: No fault record
1: Over-current during acceleration (ocA)
2: Over-current during deceleration (ocd)
3: Over-current during constant speed (ocn)
4: Ground fault (GFF)
6: Over-current at stop (ocS)
7: Over-voltage during acceleration (ovA)
8: Over-voltage during deceleration (ovd)
9: Over-voltage during constant speed (ovn)
10: Over-voltage at stop (ovS)
11: Low-voltage during acceleration (LvA)
12: Low-voltage during deceleration (Lvd)
13: Low-voltage during constant speed (Lvn)
14: Low-voltage at stop (LvS)
15: Phase loss protection (OrP)
16: IGBT over-heat (oH1)
18: TH1 open: IGBT over-heat protection error (tH1o)
21: Drive over-load (oL)
22: Electronics thermal relay protection 1 (EoL1)
23: Electronics thermal relay protection 2 (EoL2)
24: Motor PTC overheat (oH3)
26: Over-torque 1 (ot1)
27: Over-torque 2 (ot2)
28: Low current (uC)
31: Memory read-out error (cF2)

33: U-phase current detection error (cd1)
34: V-phase current detection error (cd2)
35: W-phase current detection error (cd3)
36: Clamp current detection error (Hd0)
37: Over-current detection error (Hd1)
40: Auto tuning error (AUE)
41: PID feedback loss (AFE)
42: PG feedback error (PGF1)
43: PG feedback loss (PGF2)
44: PG feedback stall (PGF3)
45: PG slip error (PGF4)
. 48: Analog current input loss (ACE)
49: External fault input (EF)
50: Emergency stop (EF1)
51: External Base Block (bb)
52: Password error (Pcod)
54: Communication error (CE1)
55: Communication error (CE2)
56: Communication error (CE3)
57: Communication error (CE4)
58: Communication Time-out (CE10)
61: Y-connection / △-connection switch error (ydc)
62: Decel. Energy Backup Error (dEb)
63: Slip error (oSL)
72: Channel 1 (S1~DCM) safety loop error (STL1)
76: Safety torque off (STo)
77: Channel 2 (S2~DCM) safety loop error (STL2)
78: Internal loop error (STL3)
79: U phase Over current before run (Aoc)
80: V phase Over current before run (boc)
81: W phase Over current before run (coc)
82: U phase output phase loss (oPL1)
83: V phase output phase loss (oPL2)
84: W phase output phase loss (oPL3)
87: Drive over load in low frequency (oL3)
89: Initial rotor position detection error (roPd)
101: CANopen software disconnect 1 (CGdE)
102: CANopen software disconnect 2 (CHbE)
104: CANopen hardware disconnect (CbFE)
105: CANopen index setting error (CIdE)
106: CANopen station number setting error (CAdE)
107: CANopen memory error (CFrE)

121: Internal communication error (CP20)
123: Internal communication error (CP22)
124: Internal communication error (CP30)
126: Internal communication error (CP32)
127: Software version error (CP33)
128: Over-torque 3 (ot3)
129: Over-torque 4 (ot4)
134: Electronics thermal relay 3 protection (EoL3)
135: Electronics thermal relay 4 protection (EoL4)
140: GFF detected when power on (Hd6)
141: GFF occurs before run (b4GFF)
142: Auto tuning error 1 (DC test stage) (AUE1)
143: Auto tuning error 2 (High frequency test stage) (AUE2)
144: Auto tuning error 3 (Rotary test stage) (AUE3)

- When the fault occurs and force stopping, it will be recorded in this parameter.
- During stop with low voltage Lv (LvS warning, no record). During operation with mid-low voltage Lv (LvA, Lvd, Lvn error, with record).
- When dEb function is valid and enabled, the drive will execute dEb and record fault code 62 to Pr. 06-17 ~ Pr. 06-22 simultaneously.

06-23 Fault Output Option 1
06-24 Fault Output Option 2
06-25 Fault Output Option 3
06-26 Fault Output Option 4

Factory Setting: 0

Settings 0~65535 (refer to bit table for fault code)

- These parameters can be used with multi-function output terminal (set to 35-38) for the specific requirement. When the fault occurs, the corresponding terminals will be activated (binary value needs to be converted to decimal value before filled in Pr. 06-23 ~ Pr. 06-26).

Fault Code	bit 0	bit 1	bit 2	bit 3	bit 4	bit 5	bit 6
	current	Volt.	OL	SYS	FBK	EXI	CE
0: No fault record							
1: Over-current during acceleration (ocA)	●						
2: Over-current during deceleration (ocd)	●						
3: Over-current during constant speed (ocn)	●						
4: Ground fault (GFF)	●						
6: Over-current at stop (ocS)	●						
7: Over-voltage during acceleration (ovA)		●					
8: Over-voltage during deceleration (ovd)		●					
9: Over-voltage during constant speed (ovn)		●					
10: Over-voltage at stop (ovS)		●					

Fault Code	bit 0	bit 1	bit 2	bit 3	bit 4	bit 5	bit 6
	current	Volt.	OL	SYS	FBK	EXI	CE
11: Low-voltage during acceleration (LvA)		●					
12: Low-voltage during deceleration (Lvd)		●					
13: Low-voltage during constant speed (Lvn)		●					
14: Low-voltage at stop (LvS)		●					
15: Phase loss protection (OrP)		●					
16: IGBT over-heat (oH1)			●				
18: TH1 open: IGBT over-heat protection error (tH1o)			●				
21: Drive over-load (oL)			●				
22: Electronics thermal relay protection 1 (EoL1)			●				
23: Electronics thermal relay protection 2 (EoL2)			●				
24: Motor PTC overheat (oH3)			●				
26: Over-torque 1 (ot1)			●				
27: Over-torque 2 (ot2)			●				
28: Low current (uC)	●						
31: Memory read-out error (cF2)				●			
33: U-phase current detection error (cd1)				●			
34: V-phase current detection error (cd2)				●			
35: W-phase current detection error (cd3)				●			
36: Clamp current detection error (Hd0)				●			
37: Over-current detection error (Hd1)				●			
40: Auto tuning error (AUE)				●			
41: PID feedback loss (AFE)					●		
42: PG feedback error (PGF1)					●		
43: PG feedback loss (PGF2)					●		
44: PG feedback stall (PGF3)					●		
45: PG slip error (PGF4)					●		
48: Analog current input loss (ACE)					●		
49: External fault input (EF)						●	
50: Emergency stop (EF1)						●	
51: External Base Block (bb)						●	
52: Password error (Pcod)				●			
54: Communication error (CE1)							●
55: Communication error (CE2)							●
56: Communication error (CE3)							●
57: Communication error (CE4)							●

Fault Code	bit 0	bit 1	bit 2	bit 3	bit 4	bit 5	bit 6
	current	Volt.	OL	SYS	FBK	EXI	CE
58: Communication Time-out (CE10)							●
61: Y-connection / △-connection switch error (ydc)						●	
62: Decel. Energy Backup Error (dEb)		●					
63: Slip error (oSL)						●	
72: Channel 1 (S1~DCM) safety loop error (STL1)				●			
76: Safety torque off (STo)				●			
77: Channel 2 (S2~DCM) safety loop error (STL2)				●			
78: Internal loop error (STL3)				●			
79: U phase Over current before run (Aoc)	●						
80: V phase Over current before run (boc)	●						
81: W phase Over current before run (coc)	●						
82: U phase output phase loss (oPL1)	●						
83: V phase output phase loss (oPL2)	●						
84: W phase output phase loss (oPL3)	●						
87: Drive over load in low frequency (oL3)			●				
89: Initial rotor position detection error (roPd)					●		
101: CANopen software disconnect 1 (CGdE)							●
102: CANopen software disconnect 2 (CHbE)							●
104: CANopen hardware disconnect (CbFE)							●
105: CANopen index setting error (CIdE)							●
106: CANopen station number setting error (CAdE)							●
107: CANopen memory error (CFrE)							●
121: Internal communication error (CP20)							●
123: Internal communication error (CP22)							●
124: Internal communication error (CP30)							●
126: Internal communication error (CP32)							●
127: Software version error (CP33)				●			
128: Over-torque 3 (ot3)			●				
129: Over-torque 4 (ot4)			●				
134: Electronics thermal relay 3 protection (EoL3)			●				
135: Electronics thermal relay 4 protection (EoL4)			●				
140: GFF detected when power on (Hd6)				●			
141: GFF occurs before run (b4GFF)				●			

Fault Code	bit 0	bit 1	bit 2	bit 3	bit 4	bit 5	bit 6
	current	Volt.	OL	SYS	FBK	EXI	CE
142: Auto tuning error 1 (DC test stage) (AUE1)				●			
143: Auto tuning error 2 (High frequency test stage) (AUE2)				●			
144: Auto tuning error 3 (Rotary test stage) (AUE3)				●			

06-29 PTC Detection Selection

Factory Setting: 0

Settings 0: Warn and keep operating
1: Warn and ramp to stop
2: Warn and coast to stop
3: No warning

This is the operating mode of a drive after Pr. 06-29 is set to define PTC detection.

06-30 PTC Level

Factory Setting: 50.0

Settings 0.0~100.0 %

It needs to set AVI / ACI analog input function Pr. 03-00~03-02 to 6 [Positive temperature coefficient (PTC) thermistor input value)].

It is used to set the PTC level, and the corresponding value for 100 % is analog input max. value.

06-31 Frequency Command for Malfunction

Factory Setting: Read only

Settings 0.00~599.00 Hz

When malfunction occurs, user can check current frequency command. If it happens again, it will overwrite the previous record.

06-32 Output Frequency at Malfunction

Factory Setting: Read only

Settings 0.00~599.00 Hz

When malfunction occurs, user can check current output frequency. If it happens again, it will overwrite the previous record.

06-33 Output Voltage at Malfunction

Factory Setting: Read only

Settings 0.0~6553.5 V

When malfunction occurs, user can check current output voltage. If it happens again, it will overwrite the previous record.

06-34 DC Voltage at Malfunction

Factory Setting: Read only

Settings 0.0~6553.5 V

📖 When malfunction occurs, user can check current DC voltage. If it happens again, it will overwrite the previous record.

06-35 Output Current at Malfunction

Factory Setting: Read only

Settings 0.00~655.35 Amp

📖 When malfunction occurs, user can check current output current. If it happens again, it will overwrite the previous record.

06-36 IGBT Temperature at Malfunction

Factory Setting: Read only

Settings 0.0~6553.5 °C

📖 When malfunction occurs, user can check current IGBT temperature. If it happens again, it will overwrite the previous record.

06-37 Capacitance Temperature at Malfunction

Factory Setting: Read only

Settings -0.0~6553.5 °C

📖 When malfunction occurs, user can check current capacitance temperature. If it happens again, it will overwrite the previous record.

06-38 Motor Speed in rpm at Malfunction

Factory Setting: Read only

Settings 0~65535 rpm

📖 When malfunction occurs, user can check current motor speed in rpm. If it happens again, it will overwrite the previous record.

06-40 Status of Multi-function Input Terminal at Malfunction

Factory Setting: Read only

Settings 0000h~FFFFh

06-41 Status of Multi-function Output Terminal at Malfunction

Factory Setting: Read only

Settings 0000h~FFFFh

📖 When malfunction occurs, user can check current status of multi-function input / output terminals. If it happens again, it will overwrite the previous record.

06-42 Drive Status at Malfunction

Factory Setting: Read only

Settings 0000h~FFFFh

📖 When malfunction occurs, user can check current drive status (communication address 2101H). If malfunction happens again, the previous record will be overwritten by this parameter.

06-44 STO Latch Selection

Factory Setting: 0

Settings 0: STO Latch
1: STO no Latch

- Pr. 06-44 = 0 STO Alarm Latch: after the reason of STO Alarm is cleared, a Reset command is needed to clear STO Alarm.
- Pr. 06-44 = 1 STO Alarm no Latch: after the reason of STO Alarm is cleared, the STO Alarm will be cleared automatically.
- All of STL1~STL3 error are “Alarm latch” mode (in STL1~STL3 mode, the Pr. 06-44 function is not effective).

06-45 Treatment to Output Phase Loss Detection (OPHL)

Factory Setting: 3

Settings 0: Warn and keep operating
1: Warn and ramp to stop
2: Warn and coast to stop
3: No warning

- The OPHL protect will be active when the setting is not 3.

06-46 Detection Time of Output Phase Loss

Factory Setting: 0.500

Settings 0.000~65.535 sec.

06-47 Current Detection Level of Output Phase Loss

Factory Setting: 1.00

Settings 0.00~100.00 %

06-48 DC Brake Time of Output Phase Loss

Factory Setting: 0.000

Settings 0.000~65.535 sec.

- When Pr. 06-48 is 0, OPHL detection function will be disabled
- Status 1: The drive is in operation

  When any phase is less than Pr. 06-47 setting level and exceeds Pr. 06-46 setting time, the drive will execute according to Pr. 06-45 setting.

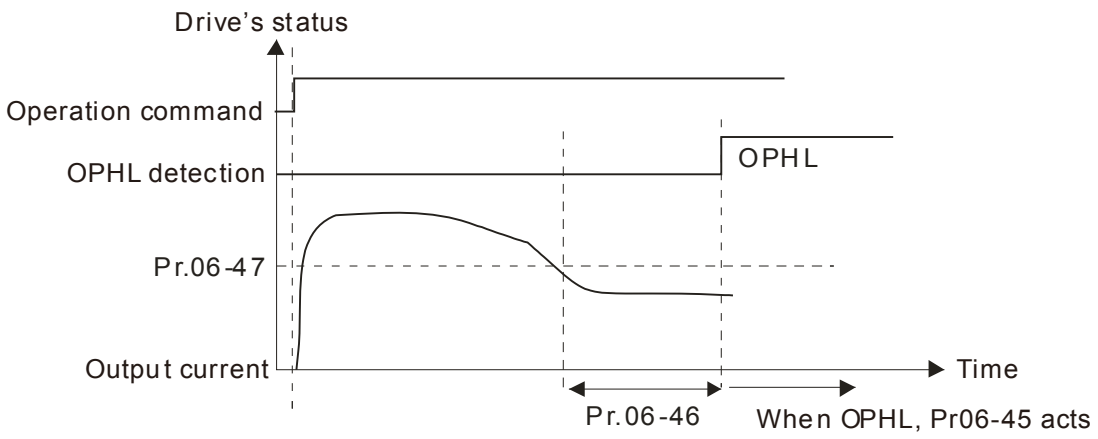

Status 2: The drive is in stop; Pr. 06-48 = 0; Pr. 07-02 ≠ 0

After the drive starts, DC brake will be applied according to Pr. 07-01 and Pr. 07-02. During this period, OPHL detection will not be conducted. After DC brake is completed, the drive starts to run, and conducts the OPHL protection as mentioned in status 1.

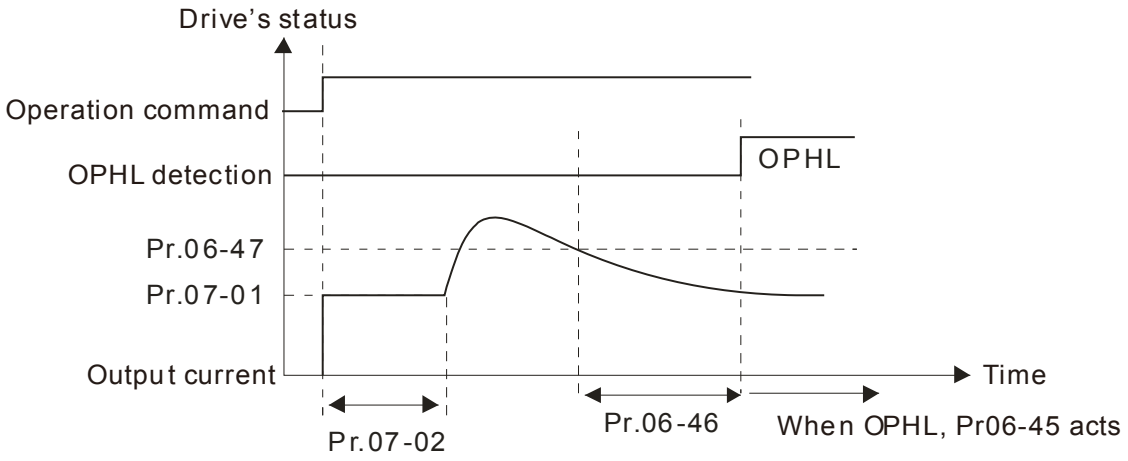

Status 3: The drive is in stop; Pr. 06-48 ≠ 0; Pr. 07-02 ≠ 0

When the drive starts, it will execute Pr. 06-48 first and then Pr. 07-02 (DC brake). DC brake current level in this status includes two parts, one is 20 times of Pr. 06-47 setting value in Pr. 06-48 setting time, and the other is Pr. 07-01 setting value in Pr. 07-02 setting time. In this period, if OPHL happens within the time of Pr. 06-48, the drive will execute Pr. 06-45 setting after the drive starts counting for half time of Pr. 06-48.

Status 3-1: Pr06-48≠0, Pr07-02≠0 (No OPHL detected before operation)

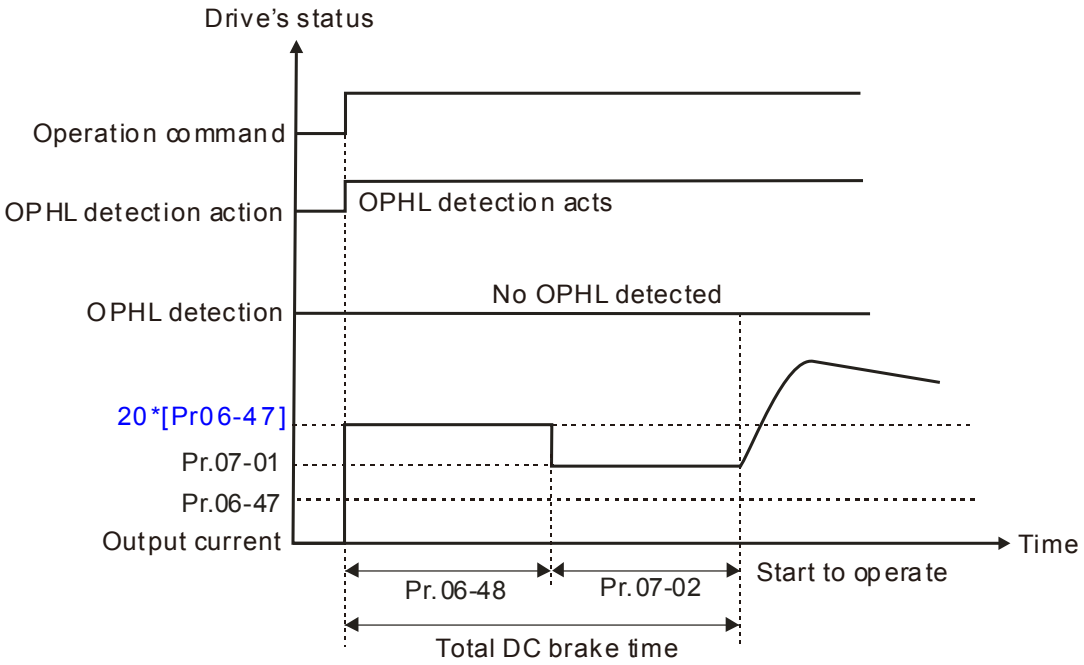

Status 3-2: Pr06-48≠0, Pr07-02≠0 (OPHL detected before operation)

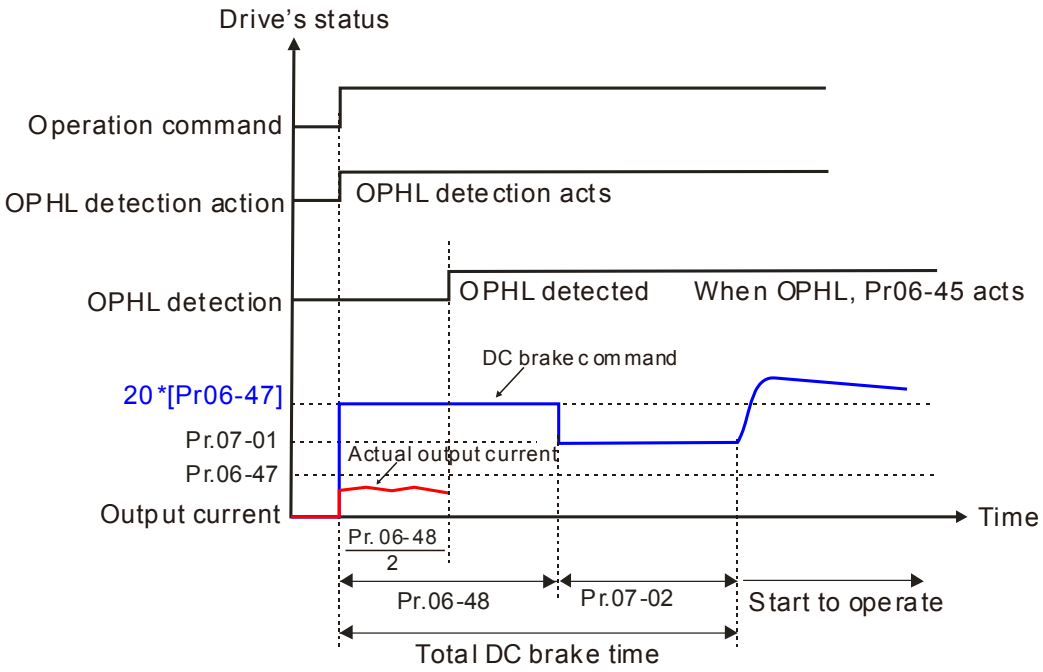

Status 4: The drive is in stop; Pr. 06-48 ≠ 0; Pr. 07-02 = 0

When the drive starts, it will execute Pr. 06-48 as DC brake. The DC brake current level is 20 times of Pr. 06-47 setting value. In this period, if OPHL happens within the time of Pr. 06-48, the drive will execute Pr. 06-45 setting after the drive starts counting for half time of Pr. 06-48.

Status 4-1: Pr06-48≠0, Pr07-02=0 (No OPHL detected before operation)

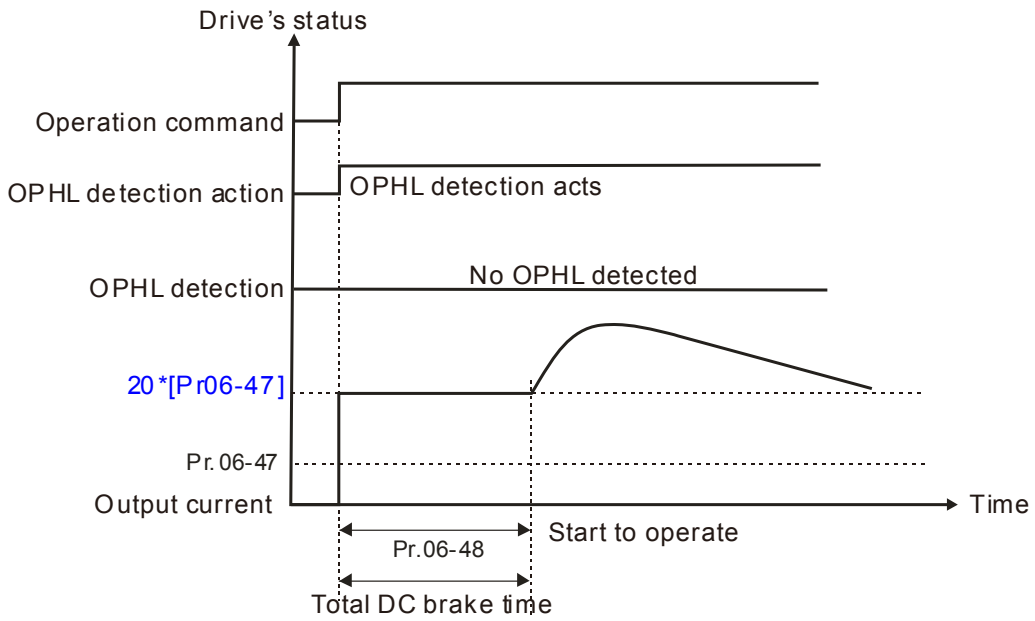

Status 4-2: Pr06-48≠0, Pr07-02=0 (OPHL detected before operation)

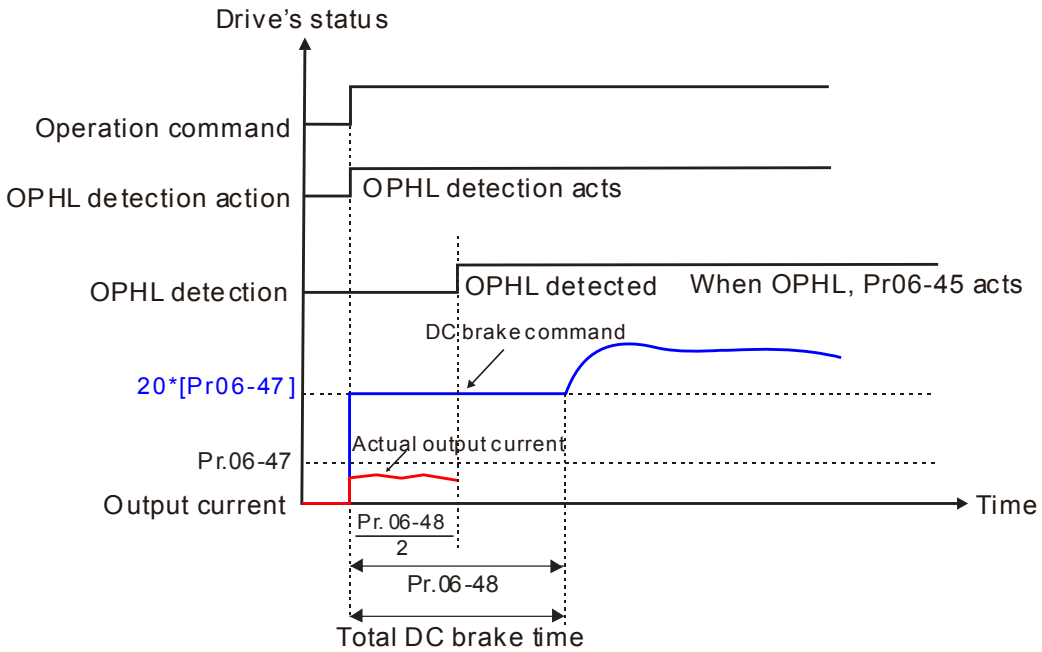

06-49 LvX Auto Reset

Factory Setting: 0

Settings 0: Disable

1: Enable

06-53 Treatment for the Detected Input Phase Loss (OrP)

Factory Setting: 0

Settings 0: Warn and ramp to stop

1: Warn and coast to stop

- If DC bus ripple detected is larger than Pr. 06-52 setting, and continue the time of Pr. 06-50, then after 30 seconds, the drive will execute input phase loss protection according to Pr. 06-53.
- If ripple voltage decreases below the set value of Pr. 06-52 within the time of Pr. 06-50 plus 30 seconds, the OrP protection function will be recalculate.

06-55 Derating Protection

Factory Setting: 0

Settings 0: Constant rated current and limit carrier wave by load current and temperature

1: Constant carrier frequency and limit load current by setting carrier wave

2: Constant rated current (same as setting 0), but close current limit

- Allowable max. output frequency and the min. carrier wave limit in control mode:
  VF, SVC, VFPG
  When max. output frequency is 599 Hz, the min. carrier wave is 6 k.
- Setting 0:
  When the operating point is greater than the derating curve (when the operating carrier wave is greater than the rated carrier wave), the rated current is constant, and carrier frequency (Fc) outputted by the drive will auto decrease according to ambient temperature, overload

output current and overload time. If overload situation is not frequent and only cares the carrier frequency operated with the rated current for a long time, and can accept the change of carrier wave due to short overload, it is recommended to set to 0.

Refer to the following diagram for the level of carrier frequency. Take VFD9A0MS43ANSAA in normal duty for example: ambient temperature 50 °C, UL open-type, and independent installation. When the carrier frequency is set to 10 kHz, corresponding to 55 % rated output current. At the same conditions, ambient temperature 40°C is corresponding to 75 % of rated output current. When output current is higher than the value, it will auto decrease the carrier wave according to ambient temperature, output current and overload time. At this time, the overload capacity of drive is still 150 % of rated current.

📖 Setting 1:

When the operating point exceeds derating curve 1, carrier frequency is fixed to the set value. Please select this mode if the change of carrier wave and motor noise caused by ambient temperature and frequent overload are not accepted. (Please refer to Pr. 00-17)

Refer to the following diagram for the derating level of rated current. Take VFD9A0MS43ANSAA in normal duty for example, when the carrier frequency is to be maintained at 10 kHz, the rated current is decreased to 55 %. The OL protection will execute when the current is 120 % * 55 % = 66 % for a minute. Therefore, it needs to operate by the curve to keep the carrier frequency.

📖 Setting 2:

The protection method and action is the same as set to 0, but disables the current limit when output current is derating Ratio ×120 % (default value) in normal duty and is derating Ratio ×180 % (default value) in heavy duty.

The advantage is that it can provide higher starting output current when the carrier frequency setting is higher than the factory setting. The disadvantage is that the carrier wave derates easily when overload.

Example: when Pr. 06-55 = 0 or 1, over-current stall prevention level = Ratio*Pr. 06-03. When Pr. 06-55 = 2, over-current stall prevention level = Pr. 06-03.

📖 It should be used with Pr. 00-16 and Pr.00-17 for setting.

📖 The derating will also be affected by ambient temperature, please refer to ambient temperature derating curve.

Example: take VFD9A0MS43ANSAA in normal duty for example: ambient temperature 50 °C, UL open-type, and independent installation. When the carrier frequency is set to 10 kHz, corresponding to 55 % rated output current. The ambient temperature 60°C is corresponding to 55 % * 75 % of rated output current.

📖 Derating curve (when Pr. 00-10 = 0 and Pr. 00-11 = 0~3), modulation mode can be adjusted by Pr. 11-41.

In normal duty mode (Pr. 00-16 = 0)	In heavy duty mode (Pr. 00-16 = 1)
Normal duty / 2-phase modulation mode 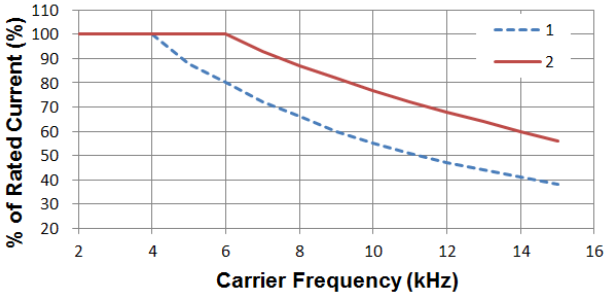	**Heavy duty / 2-phase modulation mode** 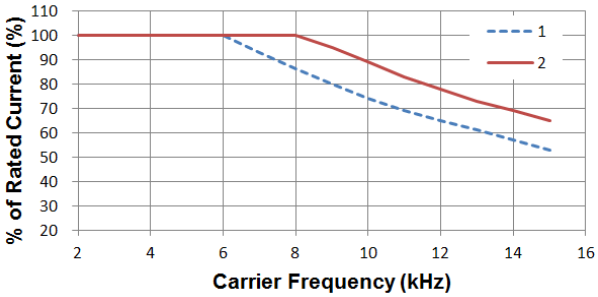
Normal duty / space vector modulation mode 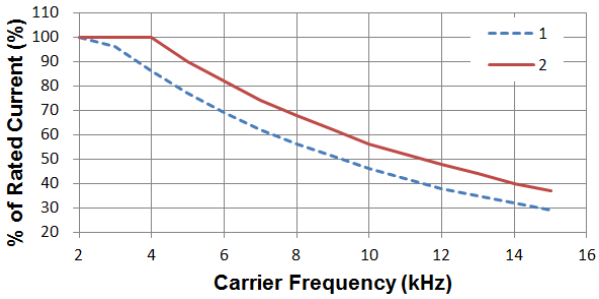	**Heavy duty / space vector modulation mode** 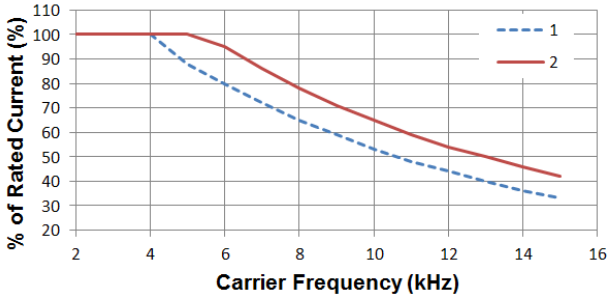

NOTE Line 1: T_a = 50 °C or Pr. 06-55 = 1

Line 2: T_a = 40 °C and Pr. 06-55 = 0/2

Ambient temperature derating curve for general control

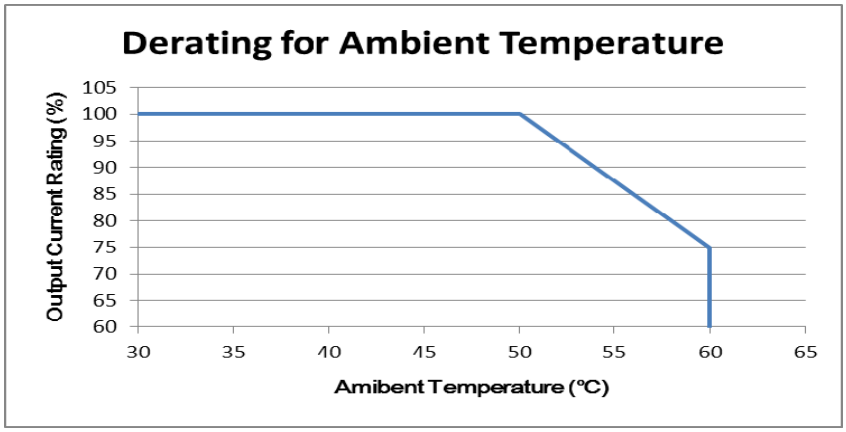

06-56 PT100 Voltage Level 1

Factory Setting: 5.000

Settings 0.000~10.000 V

06-57 PT100 Voltage Level 2

Factory Setting: 7.000

Settings 0.000~10.000 V

Condition settings: Pr. 06-57 > Pr. 06-56.

06-58 PT100 Level 1 Frequency Protection

Factory Setting: 0.00

Settings 0.00~599.00 Hz

06-59 Delay Time of Activating PT100 Level 1 Frequency Protection

Factory Setting: 60

Settings 0~6000 sec.

PT100 operation instructions

(1) Use voltage type analog input (AVI, ACI voltage 0-10V) and select PT100 mode.

(2) User can select one of voltage type analog input below:
(a) Pr. 03-00 =11, (b) Pr. 03-01 = 11 and Pr. 03-29 = 1

(3) When selecting Pr. 03-01 = 11 and Pr. 03-29 = 1, must switch AFM to 0-10V.

(4) AFM outputs constant voltage or current, Pr. 03-20 = 23. Must switch ACM to 0-20 mA, and set AFM output level to 45% (Pr. 03-32 = 45%) of 20 mA = 9 mA.

(5) Pr. 03-32 is for adjusting the constant voltage or constant current of AFM output, the setting range is 0~100.00 %.

(6) There are two types of action level for PT100. The diagram of PT100 protecting action is shown below:

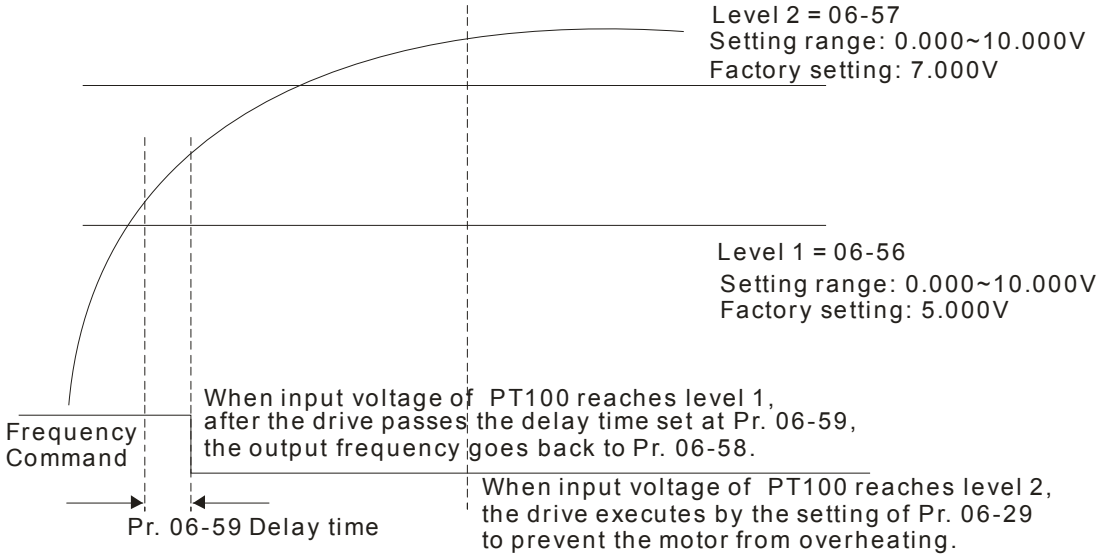

When Pr. 06-58 = 0.00 Hz, PT100 function is disabled.

Example:

When using PT100, if motor temperature is higher than 135 °C (275 °F), the drive will start to count the delay time of auto deceleration (Pr. 06-59). The drive will decrease motor frequency to the setting of Pr. 06-58 when reaches count value. The drive will operate at the frequency set by Pr. 06-58 till the motor temperature is lower than 135 °C (275 °F). If motor temperature is higher than 150°C (302 °F), the drive will decelerate to stop automatically and display warning “OH3”.

Set up process:

1. Switch AFM to 0-20 mA on control board.
2. Wiring:
   Connect external terminal AFM to “+”
   Connect external terminal ACM to “-“
   Connect AFM and AVI to “short-circuit”
3. Pr. 03-00 = 11, Pr. 03-20 = 23, Pr. 03-32 = 45 % (9 mA)

4. Refer to RTD temperature and resistance comparison table
   Temperature = 135 °C, resistance = 151.71 Ω, input current: 9 mA, voltage: about 1.37 Vdc
   Temperature = 150°C, resistance = 157.33 Ω, input current: 9 mA, voltage: about 1.42 Vdc

5. When RTD temperature > 135 °C, the drive will decelerate to specified operation frequency automatically. Pr. 06-56 = 1.37 and Pr. 06-58 = 10 Hz. (When Pr. 06-58 = 0, specified operation frequency is disabled)

6. When RTD temperature > 150 °C, the drive will output fault and decelerate to stop displaying warning "OH3" simultaneously. Pr. 06-57 = 1.42 and Pr. 06-29 = 1 (warning and decelerate to stop).

06-60	Software Detection GFF Current Level

Factory Setting: 60.0

Settings 0.0~6553.5 %

06-61	Software Detection GFF Filter Time

Factory Setting: 0.10

Settings 0.00~655.35 sec.

When the drive detects the unbalanced three-phase output current is higher than the setting of Pr. 06-60, GFF protection will be activated. Then the drive will stop outputting.

06-63	Operation Time of Fault Record 1 (Day)
06-65	Operation Time of Fault Record 2 (Day)
06-67	Operation Time of Fault Record 3 (Day)
06-69	Operation Time of Fault Record 4 (Day)
06-90	Operation Time of Fault Record 5 (Day)
06-92	Operation Time of Fault Record 6 (Day)

Factory Setting: Read only

Settings 0~65535 days

06-64	Operation Time of Fault Record 1 (Min.)
06-66	Operation Time of Fault Record 2 (Min.)
06-68	Operation Time of Fault Record 3 (Min.)
06-70	Operation of Fault Record 4 (Min.)
06-91	Operation of Fault Record 5 (Min.)
06-93	Operation of Fault Record 6 (Min.)

Factory Setting: Read only

Settings 0~1439 min.

If there is any malfunction when the drive operating, Pr. 06-17~06-22 will record malfunctions, and Pr. 06-63~06-70 can record the operation time for 4 malfunctions in sequence. It can help to check if there is any problem with the drive according to the spacing of fault time recorded.

For example: The 1st error: ocA occurs after motor drive operates for 1000 minutes.
The 2nd error: ocd occurs after another 1000 minutes.
The 3rd error: ocn occurs after another 1000 minutes.

The 4th error: ocA occurs after another 1000 minutes.

The 5th error: ocd occurs after another 1000 minutes.

The 6th error: ocn occurs after another 1000 minutes.

Then Pr. 06-17~06-22 and Pr. 06-63~06-70 recorded as follows:

Parameter record method as follows:

	1st fault	2nd fault	3rd fault	4th fault	5th fault	6th fault
06-17	ocA	ocd	ocn	ocA	ocd	ocn
06-18	0	ocA	ocd	ocn	ocA	ocd
06-19	0	0	ocA	ocd	ocn	ocA
06-20	0	0	0	ocA	ocd	ocn
06-21	0	0	0	0	ocA	ocd
06-22	0	0	0	0	0	ocA
06-63	1000	560	120	1120	680	240
06-64	0	1	2	2	3	4
06-65	0	1000	560	120	1120	680
06-66	0	0	1	2	2	3
06-67	0	0	1000	560	120	1120
06-68	0	0	0	1	2	2
06-69	0	0	0	1000	560	120
06-70	0	0	0	0	1	2

※ By time record, it can be known that the last fault (Pr. 06-17) happened after the drive run for 4 days and 240 minutes.

06-71 Low Current Setting Level

Factory Setting: 0.0

Settings 0.0 ~ 100.0 %

06-72 Low Current Detection Time

Factory Setting: 0.00

Settings 0.00 ~ 360.00 sec.

06-73 Treatment for Low Current

Factory Setting: 0

Settings
0 : No function
1 : Warn and coast to stop
2 : Warn and ramp to stop by 2nd deceleration time
3 : Warn and operation continue

The drive will operate as the setting of Pr. 06-73 when output current is lower than the setting of Pr. 06-71 and when low current exceeds detected time Pr. 06-72. This parameter can be used with external multi-function output terminal 44 (for low current output).

The low current detection function will not be executed when drive is at sleep or standby status.

07 Special Parameters

✓ This parameter can be set during operation.

✓ 07-00 Software Brake Level

Factory Setting: 370.0 / 740.0

Settings 110 V / 230 V: 350.0~450.0 Vdc
460 V: 700.0~900.0 Vdc

This parameter sets the level of brake transistor which refers to the DC-bus voltage. Users can choose suitable brake resistor to achieve the best deceleration. Refer to Chapter 7 “Optional Accessories” for the information of brake resistor.

✓ 07-01 DC Brake Current Level

Factory Setting: 0

Settings 0~100 %

This parameter sets the level of DC brake current outputted to the motor during start-up and stopping. When setting the percentage of DC brake current, the rated current is regarded as 100%. Be sure to start with a low DC brake current level, and increase slowly until proper brake torque has been attained. However, the DC brake current can NOT exceed the rated current to avoid burning the motor. Therefore, DO NOT use the DC brake as mechanical retention, otherwise it may cause injury accident.

✓ 07-02 DC Brake Time at Startup

Factory Setting: 0.0

Settings 0.0~60.0 sec.

The motor may be in rotation status due to external force or the inertia itself. If the drive is used with the motor at this moment, it may cause motor damage or drive protection due to over current. This parameter can output DC current generating torque to force the motor stop before motor operation to get a stable start. This parameter determines the duration of the DC brake current when the drive start-up. When set to 0.0, the DC brake is invalid at startup.

✓ 07-03 DC Brake Time at Stop

Factory Setting: 0.0

Settings 0.0~60.0 sec.

The motor may be in rotation status after the drive stops outputting due to external force or inertia itself, and cannot stop completely. This parameter can output DC current generating torque to force the drive stop after the drive stops outputting to make sure that the motor stops.

This parameter determines the duration of the DC Brake current during brakes. To enable DC brake at stop, this function will be valid when Pr. 00-22 (stop method) is set to 0 (ramp to stop).

Related parameters: Pr. 00-22 Stop Method, Pr. 07-04 DC Brake Start Frequency.

07-04 DC Brake Start Frequency

Factory Setting: 0.00

Settings 0.00~599.00 Hz

This parameter determines the start frequency of DC brake before the drive ramp to stop. When this setting is less than start-up frequency (Pr. 01-09), the start frequency of DC brake will start from the min. frequency.

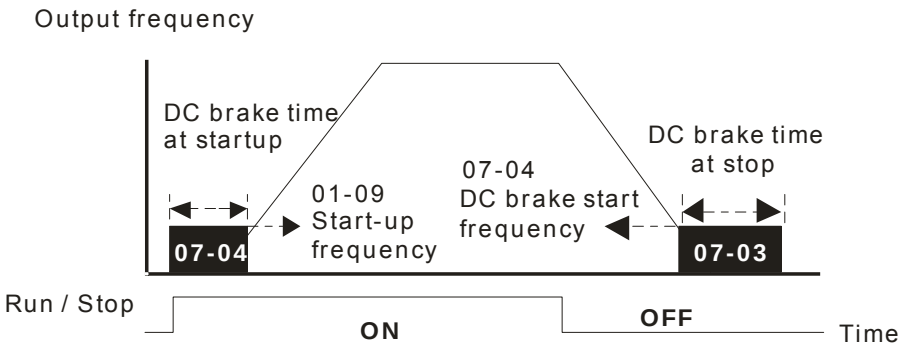

DC Brake Output Timing Diagram

DC brake before run is used for occasions when the load is movable at stop, such as fans and pumps. The motor is in free operating status and in uncertain running direction before the drive startups. Execute DC brake first before starting the motor.

DC Brake at stop is used for occasions that hoping to brake the motor quickly or to control the positioning, such as crane or cutting machine.

07-05 Voltage Incrasing Gain

Factory Setting: 100

Settings 1~200 %

When using speed tracking, adjust Pr. 07-05 to slow down the increasing speed of voltage if there are errors such as oL or oc. However, the time of speed tracking will be longer.

07-06 Restart after Momentary Power Loss

Factory Setting: 0

Settings 0: Stop operation
1: Speed tracking by the speed before the power loss
2: Speed tracking by the minimum output frequency

This parameter determines the operation mode when the drive restarts from a momentary power loss.

The power system connected to the drive may be power off momentarily due to many reasons. This function allows the drive to keep outputting after the drive is repowered and will not cause the drive stops.

Setting 1: Tracking the frequency before momentary power loss, accelerating to master frequency command after the drive output frequency and motor rotator speed is synchronous. This setting is recommended if the characteristics of motor load are large inertia and small resistance. Example: In the equipment with big inertia flywheel, there is NO need to wait till the flywheel stops completely after restart to execute operation command, therefore it saves time.

- Setting 2: Frequency tracking starts from the minimum output frequency, accelerating to master frequency command after the drive output frequency and motor rotator speed is synchronous. This setting is recommended if the characteristics of motor load are small inertia and large resistance.
- In PG control mode, the AC motor drive will execute the speed tracking function automatically by PG speed when this setting is NOT set to 0.

07-07 Allowed Power Loss Duration

Factory Setting: 2.0

Settings 0.0~20.0 sec.

- This parameter determines the maximum time of allowable power loss. If the duration of a power loss exceeds this parameter setting, the AC motor drive will stop outputting.
- Pr. 07-06 is valid when the maximum allowable power loss time is ≤ 20 seconds and the AC motor drive displays “LU”. But if the AC motor drive is powered off due to overload, even if the maximum allowable power loss time is ≤ 20 seconds, the operation mode as set in Pr. 07-06 is not executed. In that case it

07-08 Base Block Time

Factory Setting: 0.5

Settings 0.1~5.0 sec.

- When momentary power loss is detected, the AC motor drive will block its output and then wait for a specified period of time (determined by Pr. 07-08, called Base-Block Time) before resuming operation. This parameter should be set at the time which allows the residual voltage at output side to decrease to 0V before the drive is activated again.

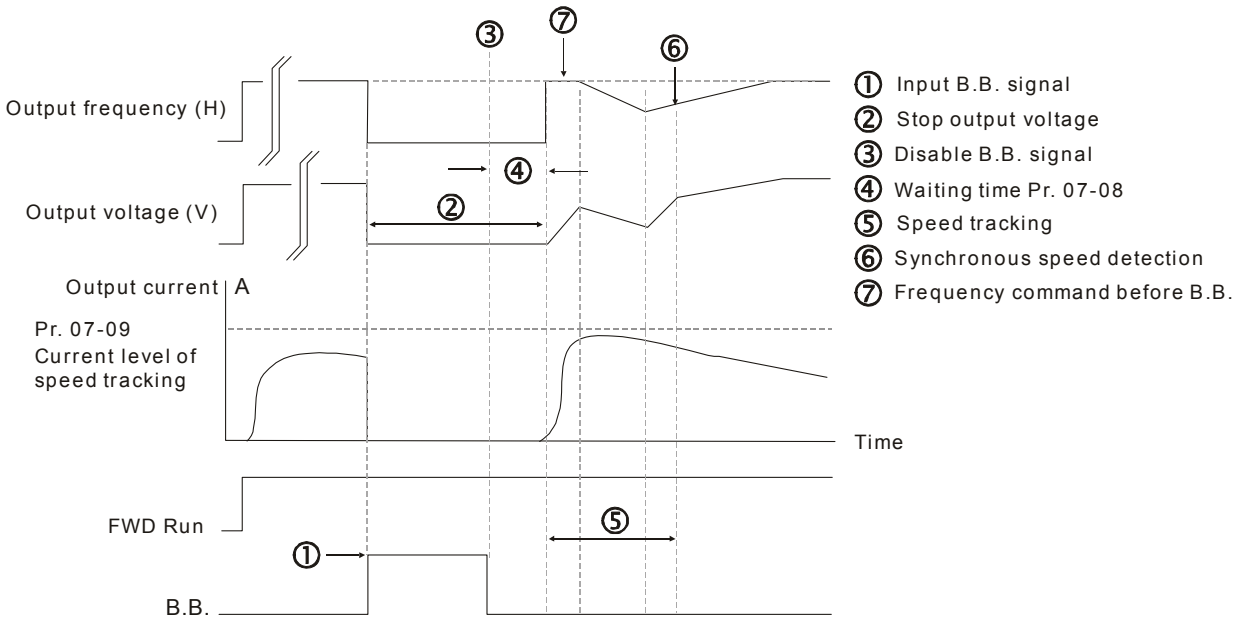

B.B. Speed tracking: from last output frequency

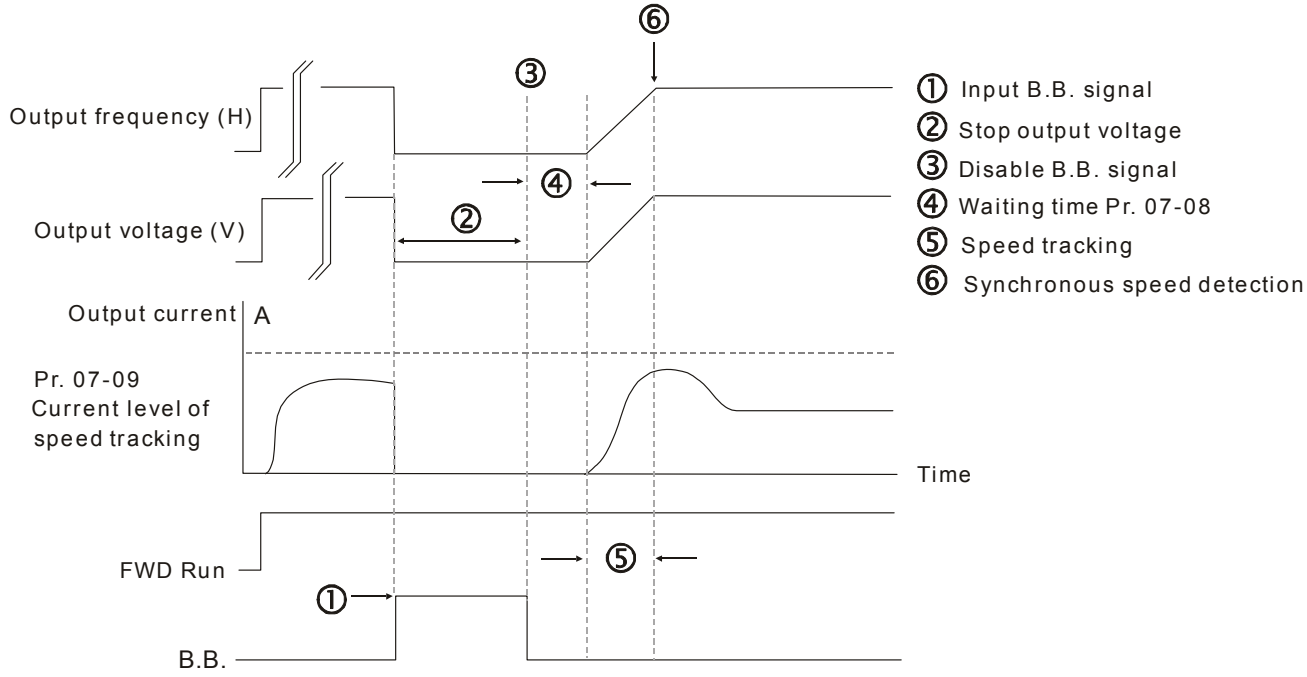

B.B. Speed tracking: from minimum output frequency

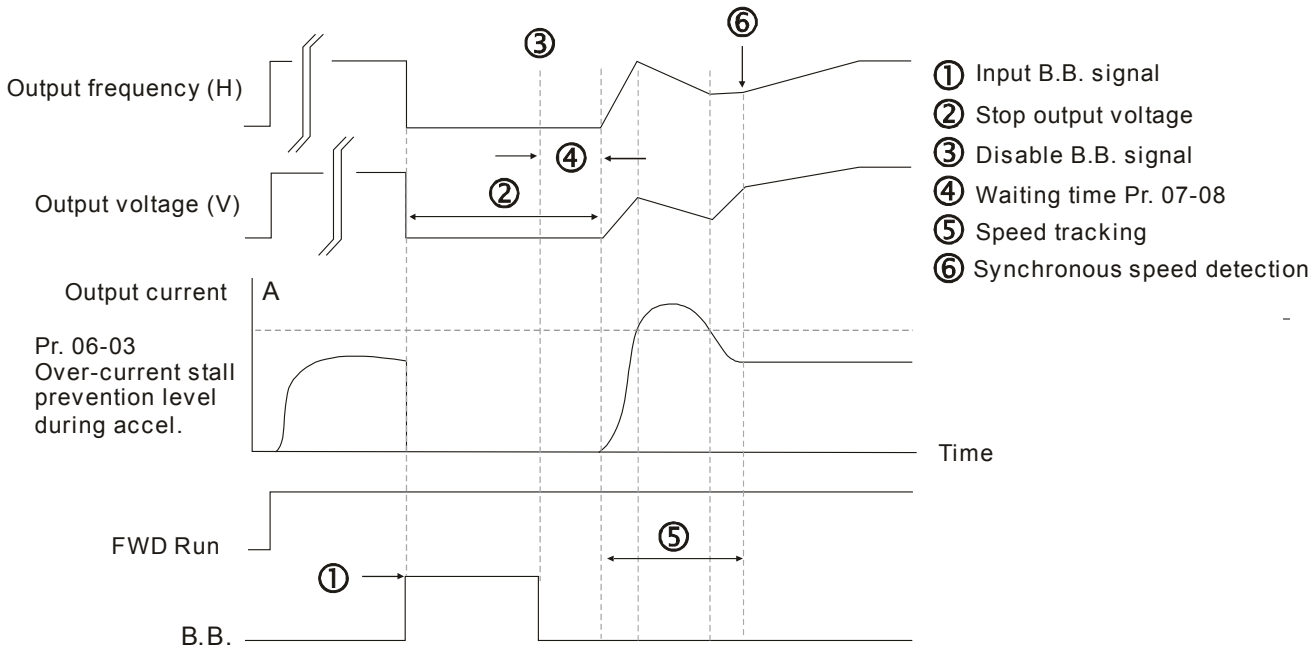

Over-current stall prevention

07-09 Current Limit of Speed Tracking

Factory Setting: 100

Settings 20~200 %

- The AC motor drive will execute the speed tracking only if the output current is greater than the value set by Pr. 07-09.
- The maximum current of speed tracking will affect the synchronous time. The larger the parameter setting is, the faster the synchronization arrives. However, if parameter setting is too large, overload protection function may be activated.

07-10 Treatment of Restart after Fault

Factory Setting: 0

Settings 0: Stop operation
1: Speed tracking by current speed
2: Speed tracking by minimum output frequency

- In PG control mode, the AC motor drive will execute the speed tracking function automatically by the PG speed when this setting is NOT set to 0.
- Fault includes: bb, oc, ov, occ. To restart after oc, ov, occ, Pr. 07-11 can NOT be set to 0.

07-11 Restart Times after Fault

Factory Setting: 0

Settings 0~10

- After fault (allowed fault: oc, ov, occ) occurs, the AC motor drive can be reset / restarted automatically up to 10 times.
- If the times of fault occurs exceeds Pr. 07-11 setting, the fault will not be restart /reset until user press “RESET” manually and execute operation command again.

07-12 Speed Tracking during Start-up

Factory Setting: 0

Settings 0: Disable
1: Speed tracking by maximum output frequency
2: Speed tracking by motor frequency at start
3: Speed tracking by minimum output frequency

- Speed tracking function is suitable for punch, fans and other large inertia load. For example, mechanical punch usually has a large inertia flywheel, and the general stop method is coast to stop. Therefore, if it needs to be restarted again, the flywheel will take 2-5 minutes or longer to stop. By setting this parameter, there is NO need to wait till the flywheel stops completely to make the flywheel start operating immediately.
- In PG control mode, the AC motor drive will execute the speed tracking function automatically by the PG speed when this setting is NOT set to 0.

07-13 dEb Function Selection

Factory Setting: 0

Settings 0: Disable
1: dEb with auto accel. / decal., the frequency will not return after power recovery.
2: dEb with auto accel. / decal., the frequency will return after power recovery

- dEb (Deceleration Energy Backup) let the motor decelerate to stop when momentary power loss occurs. When the power loss instantly, this function can be used to let the motor decelerate to zero speed. If the power recovers at this time, drive can restart the motor after dEb return time.
- Lv return level: Default value will depend on the drive power model.

  Frame A, B, C, D = Pr. 06-00 + 60V / 30V (220V series)

  Frame E and above = Pr. 06-00 + 80V / 40V (220V series)

- Lv level: Default is Pr. 06-00
- During dEb in operation, it may be interrupted by other protection, such as ryF, ov, oc, occ, EF…etc., and these error codes will be recorded.
- The STOP (RESET) command will be ineffective during the dEb auto deceleration, and the drive will keep decelerating to stop. To make the drive coast to stop immediately, please use another function EF instead.
- B.B. function is ineffective when executing dEb. B.B. function is enabled after dEb function is finished.
- Even though Lv warning is not displayed during the dEb operates. If DC BUS voltage is lower than Lv level, MO = 10 (Low voltage warning) still operates.
- dEb action illustrated as follows:
  When DC voltage drops below dEb activated level, the dEb function starts to work (soft start relay remain closed), and the drive will execute auto deceleration.

- **Situation 1:** Momentary power loss/ power current too low and unstable/ power supply sliding down because of sudden heavy load
  Pr. 07-13 = 1 and power recovers

When the power recovers and DC BUS voltage exceeds dEb return level, the drive will linear decelerates to 0 Hz and stop. The keypad will display “dEb” warning until reset manually, to avoid that the users do not know the reason of stopping.

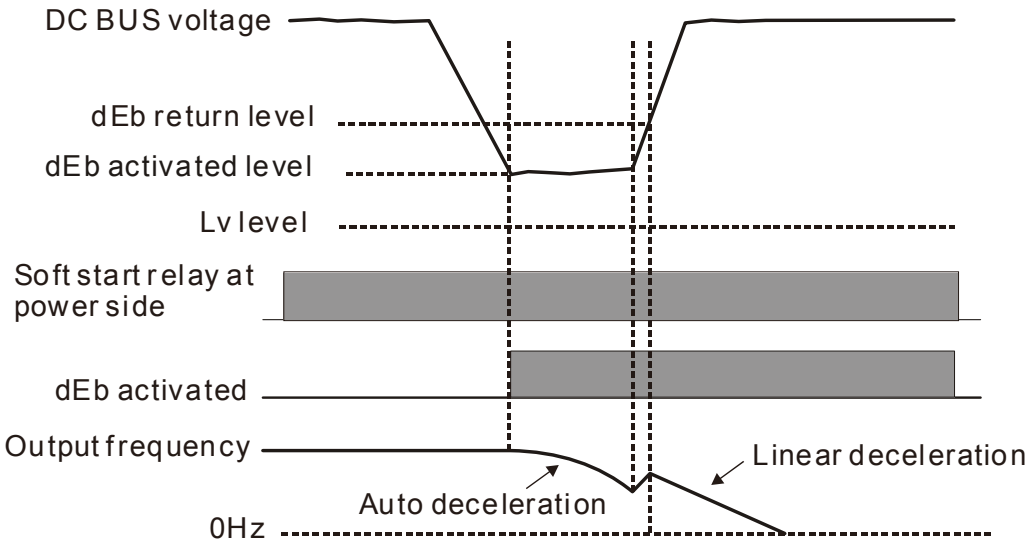

- **Situation 2:** Momentary power loss/ power current too low and unstable/ power supply sliding down because of sudden heavy load
  Pr. 07-13 = 2 and power recovers

  During the dEb deceleration (includes 0 Hz run), if the power recovers higher than dEb return level, the drive will maintain the frequency for 3 seconds and then accelerate again. The dEb warning on the keypad will be cleared automatically.

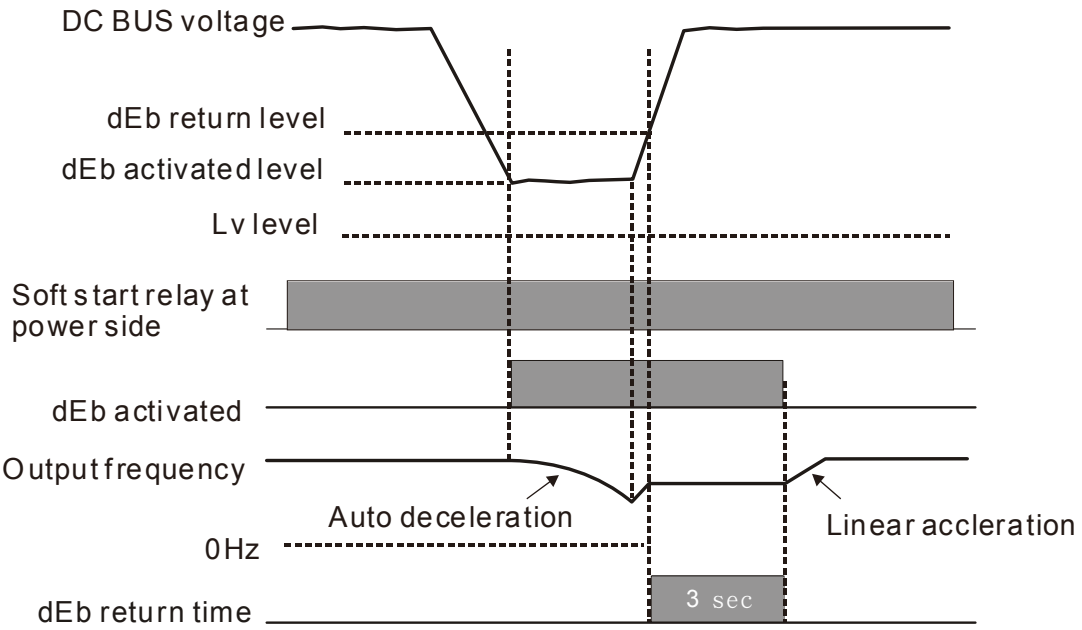

- **Situation 3:** Power supply unexpected shut down / power loss
  Pr. 07-13 = 1 and power will not recover

  The keypad will display “dEb” warning and stop after decelerating to the lowest running frequency. When the DC BUS voltage is lower than Lv level, the drive will disconnect soft start relay until running out of power completely.

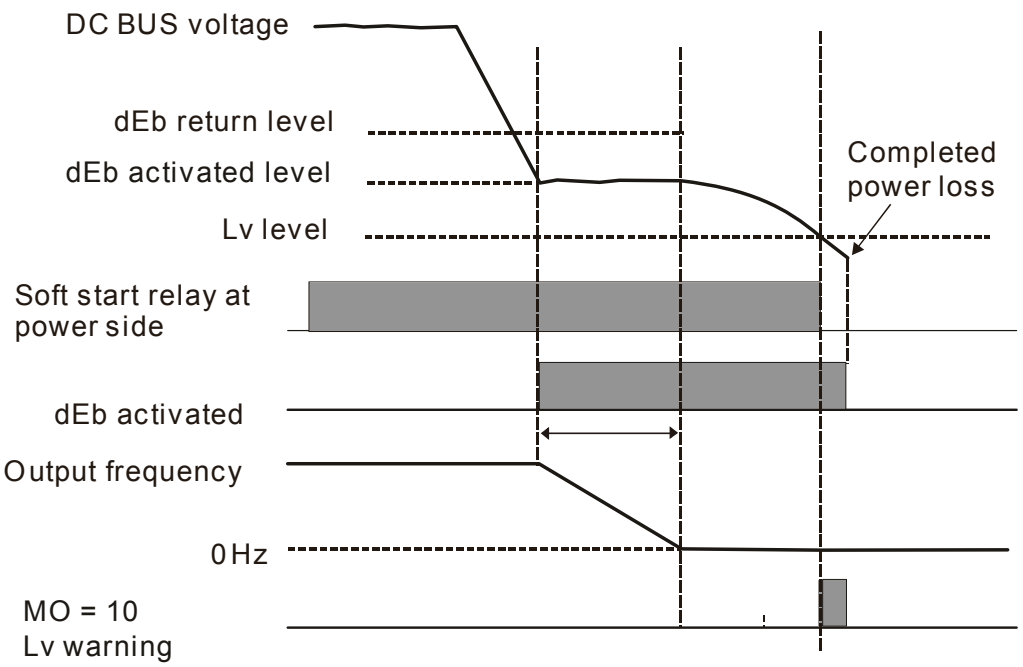

- **Situation 4:** Power supply unexpected shut down / power loss
  Pr. 07-13 = 2 and power will not recover
  The drive will decelerate to 0 Hz. The DC BUS voltage will continue to decrease until the voltage is lower than Lv level, then the drive will disconnect soft start relay. The keypad will display “dEb” warning until the drive run out of power completely.

- **Situation 5:** Pr. 07-13 = 2 and power will recover after DC BUS voltage is lower than Lv level.
  The drive will decelerate to 0 Hz. The DC BUS voltage will continue to decrease until the voltage is lower than Lv level, then the drive will disconnect soft start relay. The soft start relay will close again after the power recovers and DC BUS voltage is higher than Lv return level. When the DC BUS voltage is higher than dEb return level, the drive will maintain the frequency for 3 seconds and restart to linear accelerate, the dEb warning on the keypad will be cleared automatically.

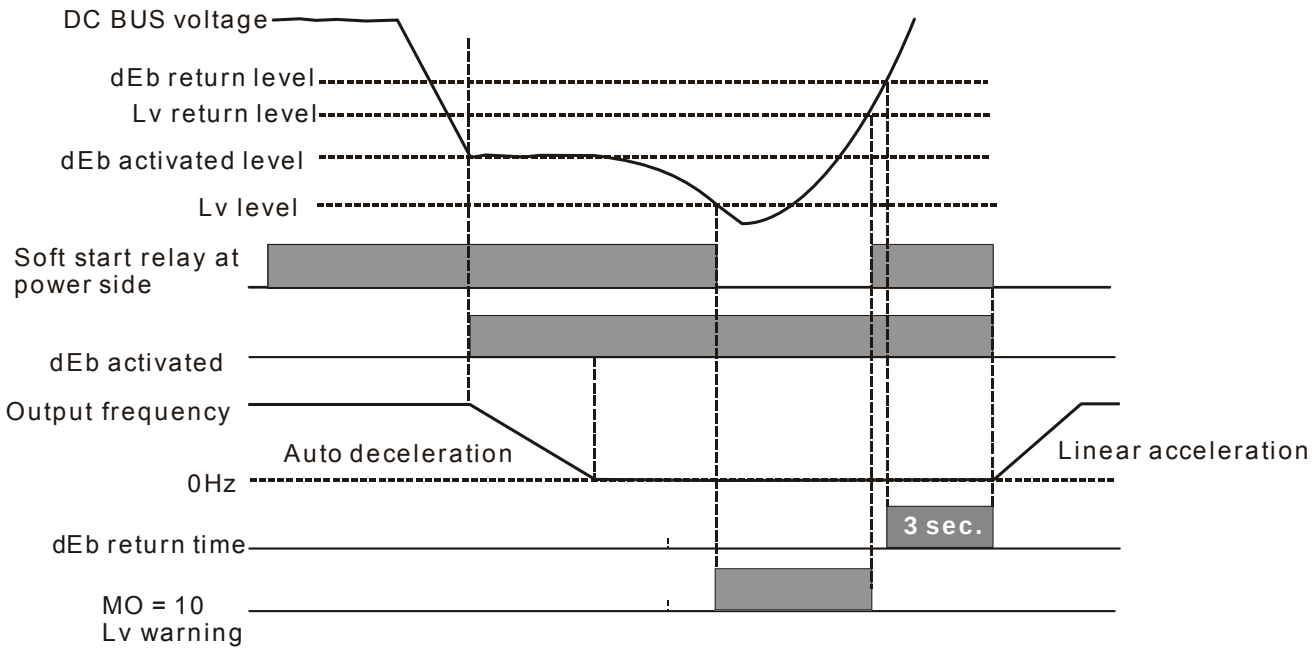

07-15 Dwell Time at Accel.

Factory Setting: 0.00

Settings 0.00~600.00 sec.

07-17 Dwell Time at Decel.

Factory Setting: 0.00

Settings 0.00~600.00 sec.

07-16 Dwell Frequency at Accel.

Factory Setting: 0.00

Settings 0.00~599.00 Hz

07-18 Dwell Frequency at Decel.

Factory Setting: 0.00

Settings 0.00~599.00 Hz

In heavy load situation, Dwell can maintain stable output frequency temporarily. It can be applied to crane, elevators and so on.

When the load is heavier, use Pr. 07-15 ~ Pr. 07-18 to avoid the protection of OV or OC.

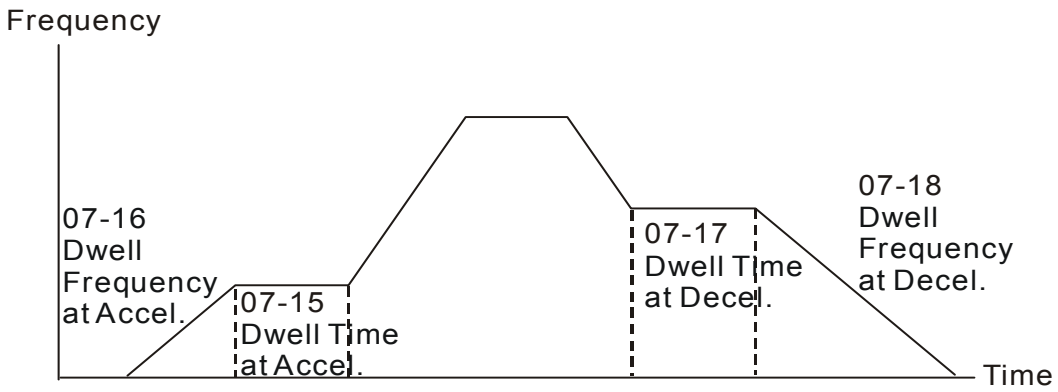

Dwell at accel./decel.

07-19 Fan Cooling Control

Factory Setting: 3

Settings
0: Fan always ON
1: Fan will be OFF after the AC motor drive stops 1 minute
2: 2: When the AC motor drive runs, the fan is ON. When the AC motor drive stops, the fan is OFF
3: Fan turns ON when the temperature attain around 60 ^{o}C

This parameter is used for controlling the fan.

Setting 0: Fan will run immediately when the power of drive is turned ON.

Setting 1: AC motor drive runs and fan will run.1 minute after AC motor drive stops, fan will be OFF

Setting 2: AC motor drive runs and fan will run. AC motor drive stops and fan will stop immediately

Setting 3: When temperature of IGBT or capacitance is higher than 60 degrees, fan will run. When temperature of IGBT and capacitance both are lower than 40 degrees, fan will stop.

07-20 Deceleration of Emergency or Forced Stop

Factory Setting: 0

Settings
0: Coast to stop
1: Stop by 1st deceleration time
2: Stop by 2nd deceleration time
3: Stop by 3rd deceleration time
4: Stop by 4th deceleration time
5: System Deceleration
6: Automatic Deceleration

When the multi-function input terminal is set to EF (10) or forced stop (18) and the terminal contact is ON, the drive will stop according to the setting of this parameter.

07-21 Auto Energy-saving Setting

Factory Setting: 0

Settings 0: Disable
1: Enable

- When energy-saving is ON, the acceleration will operate with full voltage. During constant speed operation, it will calculate the best voltage value automatically by the load power for the load. This function is not suitable for the ever-changing load or the load which is nearly full during operation.
- When the output frequency is constant, i.e. constant operation, the output voltage will decrease automatically as the load decreases. Therefore, the drive will operate with min. multiplication of voltage and current (electric power).

07-22 Energy-saving Gain

Factory Setting: 100

Settings 10~1000 %

- When Pr. 07-21 is set to 1, this parameter can be used to adjust the gain of energy-saving. The factory setting is 100 %. If the result is not well, it can be adjusted by decreasing the setting value. If the motor oscillates, then increase the setting value.
- In certain applications such as high speed spindle, the temperature rise of motor is highly concerned. Thus, when the motor is not in working status, the motor current should reduce to a lower level. Reducing this parameter setting can meet this requirement.

07-23 Auto Voltage Regulation (AVR) Function

Factory Setting: 0

Settings 0: Enable AVR
1: Disable AVR
2: Disable AVR during deceleration

- The rated voltage of the motor is usually AC 220V / 200 V, 60 Hz / 50 Hz, and the input voltage of the AC motor drive may vary from AC 180 V to 264V, 50 Hz / 60 Hz. Therefore, when the AC motor drive is used without AVR function, the output voltage will be the same as the input voltage. When the motor runs at the voltage exceeding 12 % ~ 20 % of rated voltage, it will cause higher temperature, damaged insulation and unstable torque output, which will result in losses due to shorter lifetime of motor.
- AVR function automatically regulates the output voltage of AC motor drive to the motor rated voltage. For example, if V/F curve is set at AC 200V / 50 Hz and the input voltage is at AC 200V to 264V, then output voltage to the motor will automatically be reduced to a maximum of AC 200V / 50 Hz. If the input voltage is at AC 180V to 200V, the output voltage to motor and input power will be in direct proportion.
- Setting 0: when AVR function is enabled, the drive will calculate the output voltage by actual DC BUS voltage. The output voltage will NOT change when DC BUS voltage changes.

- Setting 1: when AVR function is disabled, the drive will calculate the output voltage by actual DC BUS voltage. The output voltage will be changed by DC BUS voltage. It may cause insufficient / over current or shock.
- Setting 2: the drive will disable the AVR when deceleration to stop, and may accelerate to brake.
- When the motor ramps to stop, the deceleration time will be shorter when setting this parameter to 2 with auto acceleration / deceleration, the deceleration will be more stable and quicker.

07-24 Filter Time of Torque Command (V/F and SVC Control Mode)

Factory Setting: 0.050

Settings 0.001~10.000 sec.

- When the setting is too long, the control will be stable but the control response will be delayed. When the setting is too short, the response will be quicker but the control may be unstable. User can adjust the setting according to the stability of control and response time.

07-25 Filter Time of Slip Compensation (V/F and SVC Control Mode)

Factory Setting: 0.100

Settings 0.001~10.000 sec.

- The response time of compensation can be changed by Pr. 07-24 and Pr. 07-25.
- If Pr. 07-24 and Pr. 07-25 are set to 10 seconds, the response time of compensation is the slowest. However, the system may be unstable if the time set is too short.

07-26 Torque Compensation Gain
07-71 Torque Compensation Gain (Motor 2)
07-73 Torque Compensation Gain (Motor 3)
07-75 Torque Compensation Gain (Motor 4)

Factory Setting: 1

Settings IM: 0~10 (when Pr. 05-33 = 0)
PM: 0~5000 (when Pr. 05-33 = 1 or 2)

- When the motor load is large, a part of drive output voltage is absorbed by the resistor of stator winding, therefore, the air gap magnetic field is insufficient, which causes insufficient voltage at motor induction and result in over output current but insufficient output torque. Auto torque compensation can auto adjust output voltage according to the load, and keep the air gap magnetic fields stable to get the optimal operation.
- In the V/F control, the voltage will decrease in direct proportion with the frequency decreased. It will cause the torque decreasing at low speed due to the AC resistor is smaller while DC resistor is unchanged. Therefore, auto torque compensation function will increase output voltage in low frequency to get higher start torque.
- When compensation gain is set too large, it may cause motor overflux and result in too large output current, motor overheat or protection function be triggered.

07-27 Slip Compensation Gain (V/F and SVC Control Mode)
07-72 Slip Compensation Gain (Motor 2)
07-74 Slip Compensation Gain (Motor 3)
07-76 Slip Compensation Gain (Motor 4)

Factory Setting: 0.00

Settings 0.00~10.00 (Default value is 1 in SVC mode)

- The induction motor needs the constant slip to produce magnetic torque. It can be ignore in the higher motor speed, such as rated speed or 2-3 % of slip.
- In operation, the slip and the synchronous frequency will be in reverse proportion to produce the same magnetic torque. That is the slip will be larger with the reduction of synchronous frequency. The motor may stop when the synchronous frequency decreases to a specific value. Therefore, the slip seriously affects the accuracy of motor speed at low speed.
- In another situation, when the drive is used with induction motor, the slip will increase when the load increases. It also affects the accuracy of motor speed.
- This parameter can be used to set compensation frequency, and reduce the slip to make the synchronous speed when the motor runs in rated current, thereby to improve the accuracy of the drive. When the drive output current is higher than Pr. 05-05 No-load Current of Induction Motor 1 (A), the drive will compensate the frequency by this parameter.
- This parameter will be set to 1.00 automatically when the control method (Pr. 00-11) is changed from V/F mode to vector mode. Please do the compensation of slip after loaded and acceleration. The compensation value should be increased from small to big gradually. That is to add the output frequency with motor rated slip × Pr. 07-27 Slip Compensation Gain when the motor is at rated load. If the actual speed ratio is slower than expected, then increase the setting value. Otherwise, decrease the setting value.

07-29 Slip Deviation Level

Factory Setting: 0

Settings 0.0~100.0 %
0: No detection

07-30 Detection Time of Slip Deviation

Factory Setting: 1.0

Settings 0.0~10.0 sec.

07-31 Treatment of Slip Deviation

Factory Setting: 0

Settings 0: Warn and keep operation
1: Warn and ramp to stop
2: Warn and coast to stop
3: No warning

- The Pr. 07-29 to Pr. 07-31 is to set allowable slip level / time and the over slip treatment when the drive is running.

07-32 Motor Shock Compensation Factor

Factory Setting: 1000

Settings 0~10000

If there are current wave motion of motor in some specific area, setting this parameter can improve this situation effectively. (When running with high frequency or PG, it can be set to 0. when the current wave motion occurs in low frequency and high-powered, please increase the value of Pr. 07-32.)

07-33 Return Time of Fault Restart

Factory Setting: 60.0

Settings 0.0~6000.0 sec.

When a reset / restart after fault occurs, the drive will regards Pr.07-33 as a time period and start counting the number of faults occurred within this time period. Within the period, if the number of faults occurred did not exceed the setting in Pr. 07-11, the counting will be cleared and starts from 0 when next fault occurs.

07-46 OOB Sampling Time

Factory Setting: 1.0

Settings 0.1~120.0 sec.

07-47 Number of OOB Sampling Times

Factory Setting: 20

Settings 00~32

07-48 OOB Average Sampling Angle

Factory Setting: #.#

Settings Read Only

OOB (Out Of Balance Detection) function can be used with PLC program in washing machine system. Set Pr. 02-01~02-07 (Multi-function Input Command) to 82 “OOB loading balance detection”, and receiving Pr. 07-48 (Average Sampling Angle) Δθ value according to Pr. 07-46 (Sampling Time) and Pr. 07-47 (Number of Sampling Times) when the terminal is turned ON.

PLC or Host controller determines the motor speed according to Pr. 07-48 Average Sampling Angle Δθ value. When Average Sampling Angle Δθ value is large, the load is unbalanced. In this case, PLC or host controller needs to reduce the frequency command. On the contrary, high-speed operation can be executed.

Related parameters: Pr. 02-01~Pr. 02-07 Multi-function Input Command.

07-62 dEb Gain

Factory Setting: 8000

Settings 0~65535

08 High-function PID Parameters

✓ This parameter can be set during operation.

✓ 08-00 Terminal Selection of PID Feedback

Factory Setting: 0

Settings
0: No function
1: Negative PID feedback: by analog input (Pr. 03-00)
2: Negative PID feedback: by PG card pulse input, without direction (Pr. 10-16)
4: Positive PID feedback: by analog input (Pr. 03-00)
5: Positive PID feedback: by PG card pulse input, without direction (Pr. 10-16)
7: Negative PID feedback: by communication protocol
8: Positive PID feedback: by communication protocol

📖 Negative feedback means: + target value – feedback. It is used for the detection value will be increased by increasing the output frequency.

📖 Positive feedback means: - target value + feedback. It is used for the detection value will be decreased by increasing the output frequency.

📖 When Pr. 08-00 ≠ 7 neither ≠ 8, input value is disabled. The value of the setting remains the same after the drive is off.

1. Common applications for PID control

- Flow control: A flow sensor is used to feedback the flow data and performs accurate flow control.
- Pressure control: A pressure sensor is used to feedback the pressure data and performs precise pressure control.
- Air volume control: An air volume sensor is used to feedback the air volume data to have excellent air volume regulation.
- Temperature control: A thermocouple or thermistor is used to feedback temperature data for comfortable temperature control.
- Speed control: A speed sensor or encoder is used to feedback motor shaft speed or input another machines speed as a target value for closed loop speed control of master-slave operation. Pr. 10-00 sets the PID set point source (target value).

2. PID control loop:

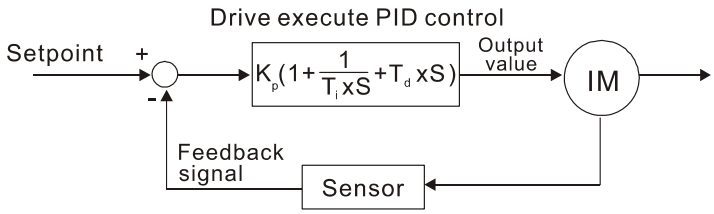

K_p: Proportional gain(P) T_i: Integral time(I) T_d: Derivative control(D) S: Operator

3. Concept of PID control

Proportional gain (P):

The output is proportional to input. With only proportional gain control, there will always be a steady-state error.

Integral time (I):

The controller output is proportional to the integral of the controller input. To eliminate the steady-state error, an “integral part” needs to be added to the controller. The integral time decides the relation between integral part and error. The integral part will be increased by time even if the error is small. It gradually increases the controller output to eliminate the error until it is 0. In this way a system can be stable without steady-state error by proportional gain control and integral time control.

Differential control (D):

The controller output is proportional to the differential of the controller input. During elimination of the error, oscillation or instability may occur. The differential control can be used to suppress these effects by acting before the error. That is, when the error is near 0, the differential control should be 0. Proportional gain (P) + differential control (D) can be used to improve the system state during PID adjustment.

4. When PID control is used in a constant pressure pump feedback application:

Set the application’s constant pressure value (bar) to be the set point of PID control. The pressure sensor will send the actual value as PID feedback value. After comparing the PID set point and PID feedback, there will be an error. Thus, the PID controller needs to calculate the output by using proportional gain (P), integral time (I) and differential time (D) to control the pump. It controls the drive to have different pump speed and achieves constant pressure control by using a 4-20 mA signal corresponding to 0-10 bar as feedback to the drive.

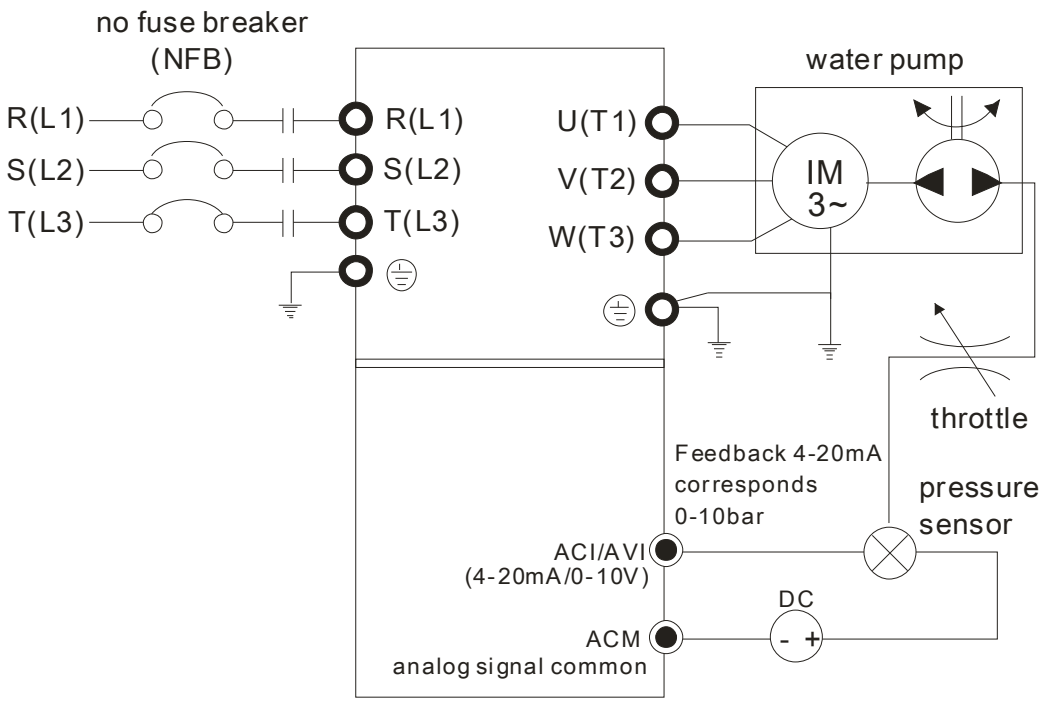

- Pr. 00-04 is set to 10 (Display PID analog feedback signal value (b) (%))
- Pr. 01-12 Acceleration Time will be set as required
- Pr. 01-13 Deceleration Time will be set as required

- Pr. 00-21 = 0 to operate from the digital keypad
- Pr. 00-20 = 0, the set point is controlled by the digital keypad
- Pr. 08-00 = 1 (Negative PID feedback from analog input)
- ACI analog input Pr. 03-01 set to 5, PID feedback signal.
- Pr. 08-01-08-03 will be set as required
  If there is no vibration in the system, increase Pr. 08-01 (Proportional Gain (P))
  If there is no vibration in the system, reduce Pr. 08-02 (Integral Time (I))
  If there is no vibration in the system, increase Pr. 08-03 (Differential Time (D))
- Refer to Pr. 08-00 to 08-21 for PID parameters settings.

08-01 Proportional Gain (P)

Factory Setting: 1.0

Settings 0.0~500.0

- When the setting is 1.0, it means Kp gain is 100 %; setting is 0.5, Kp gain means 50 %.
- It is used to eliminate the system error. It is usually used to decrease the error and get the faster response speed. But if the value is set too high, it may cause the system oscillation and instability.
- If the other two gains (I and D) are set to zero, proportional control is the only one effective.

08-02 Integral Time (I)

Factory Setting: 1.00

Settings 0.00~100.00 sec.

- The integral controller is used to eliminate the error during stable system. The integral control doesn't stop working until error is 0. The integral is acted by the integral time. The smaller integral time is set, the stronger integral action will be. It is helpful to reduce overshoot and oscillation to make a stable system. At this moment, the decreasing error will be slow. The integral control is often used with other two controls to become PI controller or PID controller.
- This parameter is used to set the integral time of I controller. When the integral time is long, it will have small gain of I controller, the slower response and bad external control. When the integral time is short, it will have large gain of I controller, the faster response and rapid external control.
- When the integral time is too small, it may cause system oscillation.
- If the integral time is set as 0.00, Pr. 08-02 will be disabled.

08-03 Derivative Time (D)

Factory Setting: 0.00

Settings 0.00~1.00 sec.

- The differential controller is used to show the change of system error and it is helpful to preview the change of error. So the differential controller can be used to eliminate the error to improve system state. With the suitable differential time, it can reduce overshoot and shorten adjustment time. However, the differential operation will increase the noise interference. Please note that too large differential will cause big noise interference. Besides, the differential shows the change and the output of the differential will be 0 when there is no change. Therefore, the differential control can't be used independently. It needs to be used with other two controllers to make a PD controller or PID controller.

- This parameter can be used to set the gain of D controller to decide the response of error change. The suitable differential time can reduce the overshoot of P and I controller to decrease the oscillation and have a stable system. But too long differential time may cause system oscillation.
- The differential controller acts for the change of error and can't reduce the interference. It is not recommended to use this function in the serious interference.

08-04 Upper Limit of Integral Control

Factory Setting: 100.0

Settings 0.0~100.0 %

- This parameter defines an upper bound or limit for the integral gain (I) and therefore limits the Master Frequency. The formula is:
  Integral upper bound = Maximum Output Frequency (Pr. 01-00) x (Pr. 08-04 %)
- Too large integral value will make the slow response due to sudden load change. In this way, it may cause motor stall or machine damage.

08-05 PID Output Command Limit (Positive Limit)

Factory Setting: 100.0

Settings 0.0~100.0 %

- This parameter defines the percentage of output frequency limit during the PID control. The formula is Output Frequency Limit = Maximum Output Frequency (Pr. 01-00) × Pr. 08-05 %.

08-06 PID Feedback Value by Communication Protocol

Factory Setting: 0.00

Settings -200.00 %~200.00 %

- When PID feedback input is set as communication (Pr. 08-00 = 7 or 8), PID feedback value can be set by this value.

08-07 PID Delay Time

Factory Setting: 0.0

Settings 0.0~2.5 sec.

08-20 PID Mode Selection

Factory Setting: 0

Settings 0: Serial connection
1: Parallel connection

- When setting is 0, it uses conventional PID control structure.
- When setting is 1, proportional gain, integral gain and derivative gain are independent. The P, I and D can be customized to fit users' demand.
- Pr. 08-07 determines the primary low pass filter time when in PID control. Setting a large time constant may slow down the response rate of drive.
- Output frequency of PID control will filter by primary low pass function. This function could filter a mix frequency. A long primary low pass time means filter degree is high and vice versa.
- Inappropriate setting of delay time may cause system error.

- PI Control:

  Controlled by the P action only, and thus, the deviation cannot be eliminated entirely. To eliminate residual deviations, the P + I control will generally be utilized. And when the PI control is utilized, it could eliminate the deviation incurred by the targeted value changes and the constant external interferences. However, if the I action is excessively powerful, it will delay the responding toward the swift variation. The P action could be used solely on the loading system that possesses the integral components.

- PD Control:

  When deviation occurred, the system will immediately generate some operation load that is greater than the load generated single handedly by the D action to restrain the increment of the deviation. If the deviation is small, the effectiveness of the P action will be decreasing as well. The control objects include occasions with integral component loads, which are controlled by the P action only, and sometimes, if the integral component is functioning, the whole system will be vibrating. On such occasions, in order to make the P action's vibration subsiding and the system stabilizing, the PD control could be utilized. In other words, this control is good for use with loading of no brake functions over the processes.

- PID Control:

  Utilize the I action to eliminate the deviation and the D action to restrain the vibration, thereafter, combine with the P action to construct the PID control. Use of the PID method could obtain a control Process with no deviations, high accuracies and a stable system.

Serial connection

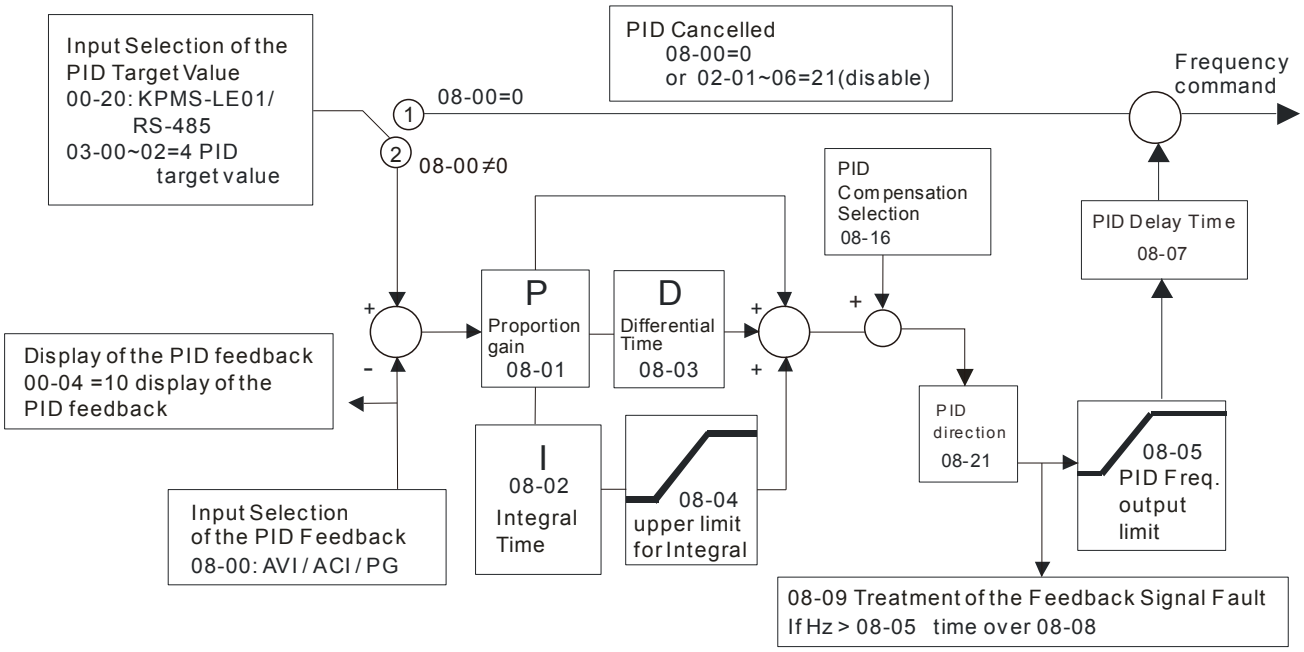

Parallel connection

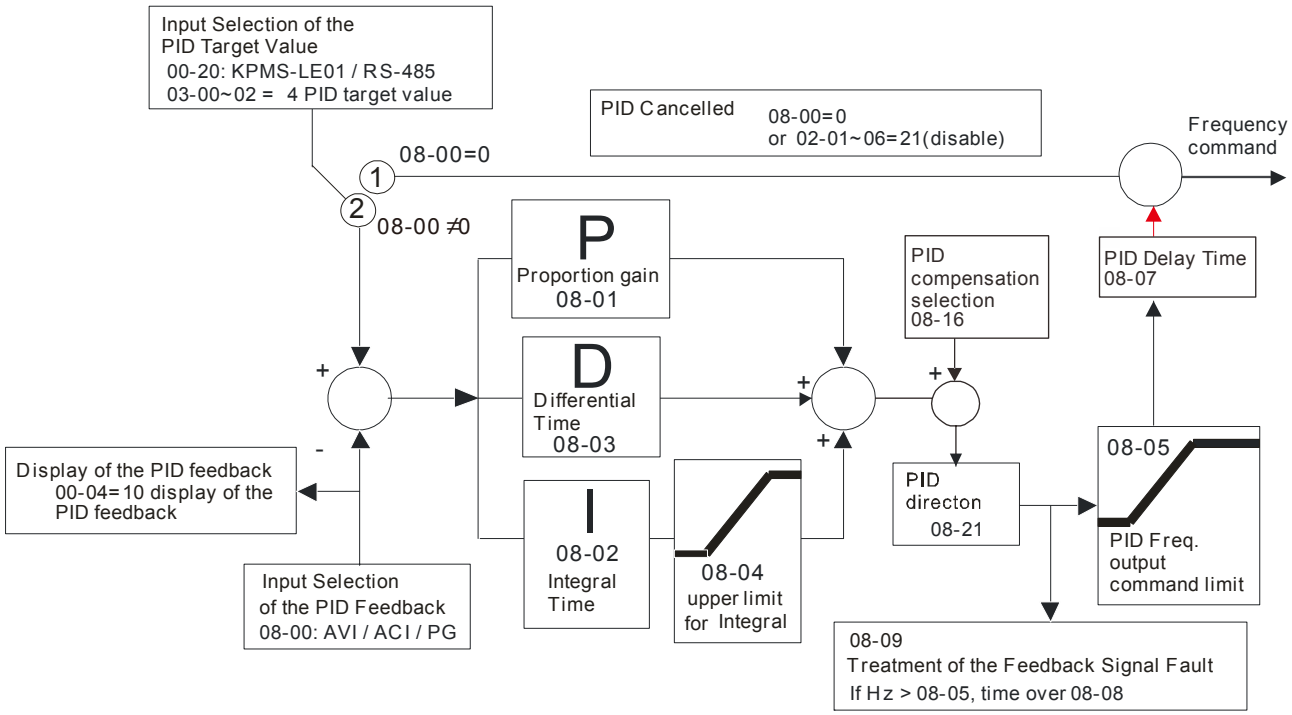

08-08 Feedback Signal Detection Time

Factory Setting: 0.0

Settings 0.0~3600.0 sec.

- Pr. 08-08 is valid only for ACI 4-20 mA.
- This parameter sets the detection time of abnormal PID signal feedback. If detection time is set to 0.0, detection function is disabled.

08-09 Feedback Signal Fault Treatment

Factory Setting: 0

Settings 0: Warn and keep operation
1: Warn and ramp to stop
2: Warn and coast to stop
3: Warn and operate at last frequency

- This parameter is valid only for ACI 4-20 mA.
- AC motor drive acts when the feedback signals analog PID feedback is abnormal.

08-10 Sleep Frequency

Factory Setting: 0.00

Settings 0.00~599.00 Hz

- Setting value of Pr. 08-10 determines if sleep reference and wake-up reference is enable or disable. When Pr. 08-10 = 0, it means disable. When Pr. 08-10 ≠ 0, it means enable.

08-11 Wake-up Frequency

Factory Setting: 0.00

Settings 0.00~599.00 Hz

- When Pr. 08-18 = 0, the unit of Pr. 08-10 and that of Pr. 08-11 become frequency. The settings then become to 0 ~ 599.00 Hz.
- When Pr. 08-18 = 1, the unit of Pr.08-10 and that of Pr. 08-11 switch to percentage. The settings then switch to 0~200.00 %.
- And the percentage is based on the input command value not the maximum. E.g. If the maximum value is 100 Kg, the current value is 30 kg, if Pr. 08-11 = 40 %, the value is 12 kg.
- Pr. 08-10 is according to the same logic for calculation.

08-12 Sleep Time

Factory Setting: 0.0

Settings 0.0~6000.0 sec.

- When the frequency command is smaller than the sleep frequency and less than the sleep time, the frequency command is equal to the sleep frequency. However the frequency command remains at 0.00 Hz until the frequency command becomes equal to or bigger than the wake-up frequency.

08-13 PID Deviation Level

Factory Setting: 10.0

Settings 1.0~50.0 %

08-14 PID Deviation Time

Factory Setting: 5.0

Settings 0.1~300.0 sec.

08-15 Filter Time for PID Feedback

Factory Setting: 5.0

Settings 0.1~300.0 sec.

- When the PID control function is normal, it should calculate within a period of time and close to the target value.
- Refer to the PID control diagram for details. When executing PID feedback control, if |PID reference target value – detection value| > Pr. 08-13 PID Deviation Level and exceeds Pr. 08-14 setting, it will be judged as the PID control fault. Multiple-function output MO = 15 (PID feedback error) will activate.

08-16 PID Compensation Selection

Factory Setting: 0

Settings 0: Parameter setting
1: Analog input

- Pr. 08-16 = 0: PID compensation value is given via Pr. 08-17 setting.

08-17 PID Compensation

Factory Setting: 0

Settings -100.0 ~ +100.0 %

The PID compensation value = Max. PID target value × Pr. 08-17. For example, the max. output frequency Pr. 01-00 = 60 Hz, Pr. 08-17 = 10.0 %, PID compensation value will increase output frequency 6.00 Hz. 60.00 Hz × 100.00 % × 10.0 % = 6.00 Hz

08-18 Setting of Sleep Mode Function

Factory Setting: 0

Settings 0: Refer to PID output command
1: Refer to PID feedback signal

When Pr. 08-18 = 0, the unit of Pr. 08-10 and that of Pr. 08-11 becomes frequency. The settings then become 0.00~599.00 Hz.

When Pr. 08-18 = 1, the unit of Pr. 08-10 and that of Pr. 08-11 switches to percentage. The settings then switch to 0~200.00 %.

08-19 Wake-up Integral Limit

Factory Setting: 50.0

Settings 0.0~200.0 %

The wake-up integral limit of drive is to prevent sudden high speed running when drive wakes up.

The wake-up integral frequency limit = (01-00 × 08-19 %)

The Pr. 08-19 is used to reduce the reaction time from sleep to wake-up.

08-21 Enable PID to Change the Operation Direction

Factory Setting: 0

Settings 0: Operation direction can be changed
1: Operation direction cannot be changed

08-22 Wakeup Delay Time

Factory Setting: 0.00

Settings 0.00~600.00 sec.

Refer to Pr. 08-18 for more information.

08-23 PID Control Flag

Factory Setting: 2

Settings bit 0 = 1, PID reverse running must follow the setting of Pr. 00-23
bit 0 = 0, PID reverse running refers to PID's calculated value
bit 1 = 1, PID Kp gain is 2 decimal place
bit 1 = 0, PID Kp gain is 1 decimal place

bit 0, When Pr. 08-21 = 1, PID reverse running is enable.

bit 0 = 0, if the PID calculated value is positive, it will be forward running. If the PID calculated value is negative, it will be reverse running.

When the setting of bit 1 changes, Kp gain will not change. For example: Kp = 6, when Pr. 08-23 bit 1 = 0, Kp = 6.0; when Pr. 08-23 bit 1 = 1, Kp = 6.00.

There are three scenarios for sleep and wake-up frequency.

1) Frequency Command (PID is not in use, Pr. 08-00 = 0. Only works in VF mode)

When the output frequency ≤ the sleep frequency, and the drive reaches the preset sleep time, then drive will be at the sleep mode. When the frequency command reaches the wake-up frequency, the drive will start to count the wake-up delay time. Then when drive reaches the wake-up delay time, the drive will begin acceleration time to reach the frequency command.

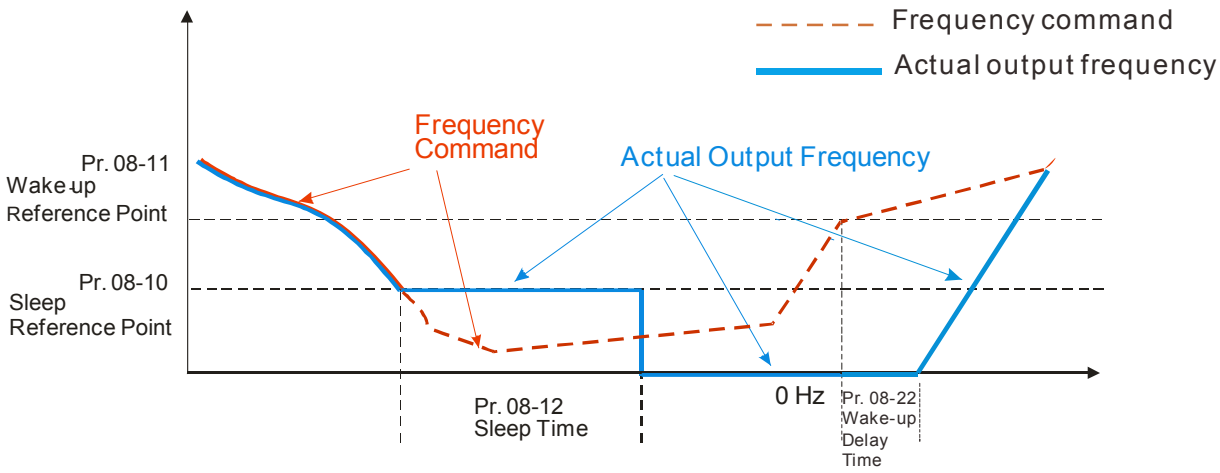

2) Frequency Command Calculation of the Internal PID

When the PID calculation reaches the sleep frequency, the drive will start to count the sleep time and the output frequency will start to decrease. If the drive exceeds the preset sleep time, it will directly go to sleep mode which is 0 Hz. But if the drive doesn't reach the sleep time, it will remain at the lower limit (if there is a preset of lower limit.). Or it will remain at the lowest output frequency set at Pr. 01-07 and wait to reach the sleep time then go to sleep mode (0 Hz).

When the calculated frequency command reaches the wake-up frequency, the drive will start to count the wake-up delay time. Once reaching the wake-up delay time, the drive will start the acceleration time to reach the PID frequency command.

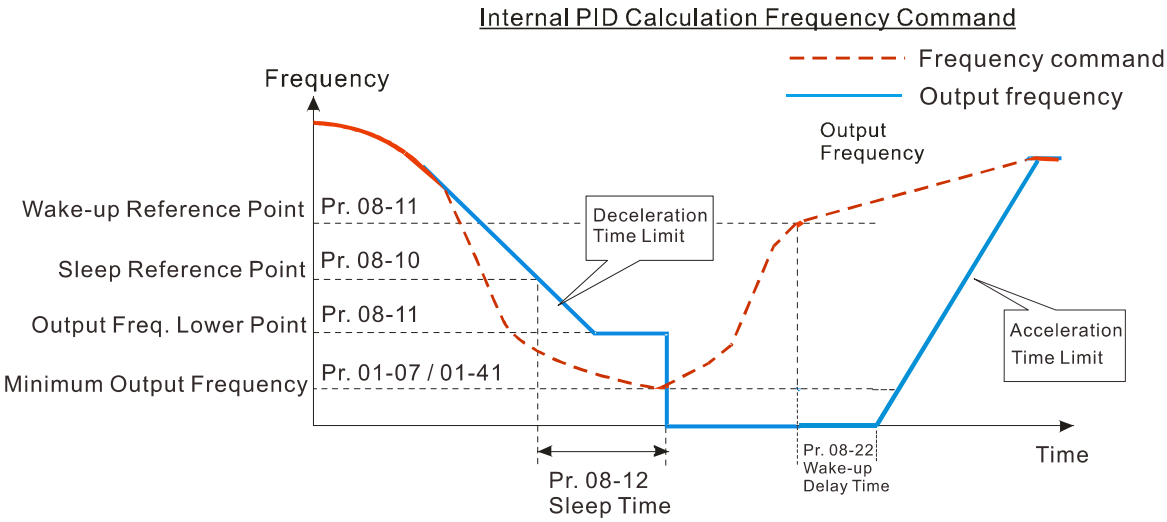

3) PID Feedback Rate Percentage (Use PID, Pr. 08-00 ≠ 0 and Pr. 08-18 = 1)

When the PID feedback rate reaches the sleep level percentage, the drive starts to count the sleep time. The output frequency will also decrease. If the drive exceeds the preset sleep time, it will go to sleep mode which is 0 Hz. But if the drive doesn't reach the sleep time, it will remain at the lower limit (if there is a preset of lower limit.). Or it will remain at the lowest output frequency set at Pr. 01-07 and wait to reach the sleep time then go to sleep mode (0 Hz).

When PID feedback value reaches the wake up percentage the motor drive will start to count the wake up delay time. Once reaches the wake up delay time, the motor drives starts the accelerating time to reach PID frequency command

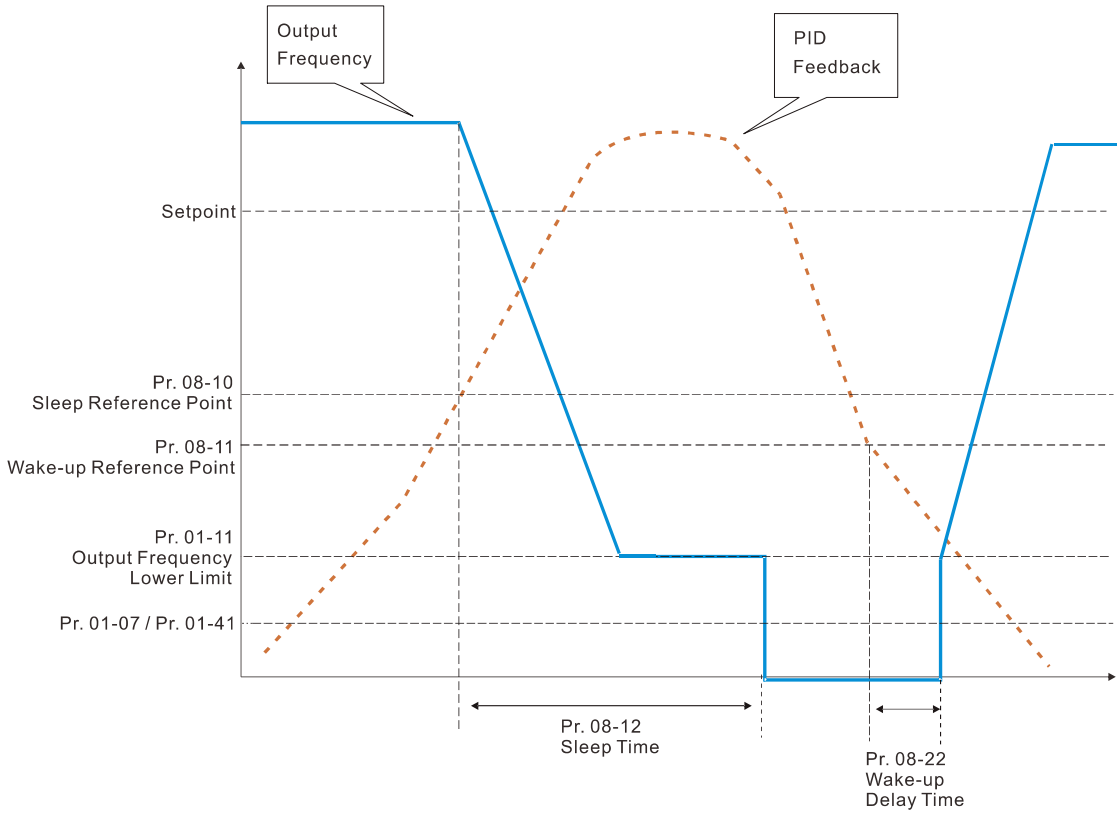

08-26 PID Output Command Limit (Reverse Limit)

Factory Setting: 100.0

Settings 0.0~100.0 %

When PID enables reverse, PID output amount is negative value, and the output amount of PID will be limited by the setting of Pr. 08-26. Need to use with Pr. 08-21.

08-27 Acceleration / deceleration time of PID command

Factory Setting : 0.00

Settings 0.00~655.35 sec.

When Pr. 08-27 is setting to 0.00 sec., there is no command of PID acceleration / deceleration, the target value is equal to PID command. When the settings is not equal to 0.00 sec., the command of PID acceleration / deceleration is active, the acceleration and deceleration of PID is that when PID target value change, the command value increment / decrement is according to this parameter.

📖 For example, if we set the parameter to 10.00 sec. , when PID target value change from 0 % to 100 %, it needs to take 10 sec. for PID command from 0 % to 100 %; the same situation when target value change from 100 % to 0 %, it also needs to take 10 sec. for PID command from 100 % to 0 %.

08-29 Selection of frequency base corresponding to 100.00 % PID

Factory Setting：0

Settings 0: PID control output 100.00 % corresponding to max. output frequency (Pr. 01-00)

1: PID control output 100.00 % corresponding to the input value of auxiliary frequency

📖 This parameter is valid when auxiliary and master frequency function opens.
When Pr. 08-29 = 0, PID control output 100.00 % corresponding to the max. output frequency;
When Pr. 08-29 = 1, PID control output 100.00 % corresponding to the input value of auxiliary frequency (If the auxiliary frequency changes, PID output frequency is also followed changes together.)

09 Communication Parameters

✓ The parameter can be set during the operation.

When using communication devices, connects AC drive with PC by using Delta IFD6530 or IFD6500.

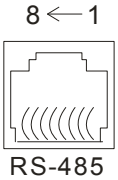

Modbus RS-485
Pin 1~2,7,8: Reserved
Pin 3, 6: GND
Pin 4: SG-
Pin 5: SG+

✓ 09-00 Communication Address

Factory Setting: 1

Settings 1~254

📖 If the AC motor drive is controlled by RS-485 serial communication, the communication address for this drive must be set via this parameter and each AC motor drive's communication address must be different.

✓ 09-01 COM1 Transmission Speed

Factory Setting: 9.6

Settings 4.8~115.2 Kbps

📖 This parameter is for setting up the transmission speed of computer and the drive.

📖 Please set 4.8 Kbps, 9.6 Kbps, 19.2 Kbps, 38.4 Kbps, 57.6 Kbps, or 115.2 Kbps. Otherwise the transmission speed will be replaced by 9.6 Kbps.

✓ 09-02 COM1 Transmission Fault Treatment

Factory Setting: 3

Settings
0: Warn and keep operation
1: Warn and ramp to stop
2: Warn and coast to stop
3: No warning and continue operation

📖 This parameter is to set the reaction of MODBUS transmission errors with the host. Detection time can be set in Pr. 09-03.

✓ 09-03 COM1 Time-out Detection

Factory Setting: 0.0

Settings 0.0~100.0 sec.

📖 It is used to set the communication transmission time-out.

✓ 09-04 COM1 Communication Protocol

Factory Setting: 1

Settings
1: 7N2 (ASCII)
2: 7E1 (ASCII)
3: 7O1 (ASCII)
4: 7E2 (ASCII)
5: 7O2 (ASCII)
6: 8N1 (ASCII)
7: 8N2 (ASCII)
8: 8E1 (ASCII)

9: 8O1 (ASCII)
10: 8E2 (ASCII)
11: 8O2 (ASCII)
12: 8N1 (RTU)
13: 8N2 (RTU)
14: 8E1 (RTU)
15: 8O1 (RTU)
16: 8E2 (RTU)
17: 8O2 (RTU)

- Control by PC (Computer Link)
- When using RS-485 serial communication interface, each drive must be pre-specified its communication address in Pr. 09-00, the computer can implement control according to their individual address.
- MODBUS ASCII (American Standard Code for Information Interchange): Each byte data is the combination of two ASCII characters. For example, a 1-byte data: 64 Hex, shown as ‘64’ in ASCII, consists of ‘6’ (36Hex) and ‘4’ (34Hex).

1. Code Description

Communication protocol is in hexadecimal, ASCII: ”0” … “9”, “A” … “F”, every 16 hexadecimal represent ASCII code. For example:

Character	‘0’	‘1’	‘2’	‘3’	‘4’	‘5’	‘6’	‘7’
ASCII code	30H	31H	32H	33H	34H	35H	36H	37H

Character	‘8’	‘9’	‘A’	‘B’	‘C’	‘D’	‘E’	‘F’
ASCII code	38H	39H	41H	42H	43H	44H	45H	46H

2. Data Format

10-bit character frame (For ASCII):

(7, N, 2)

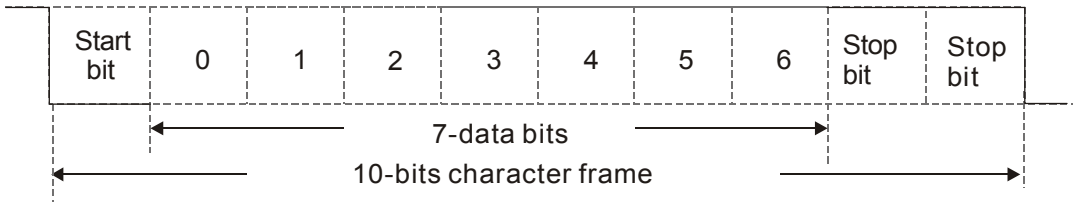

(7, E, 1)

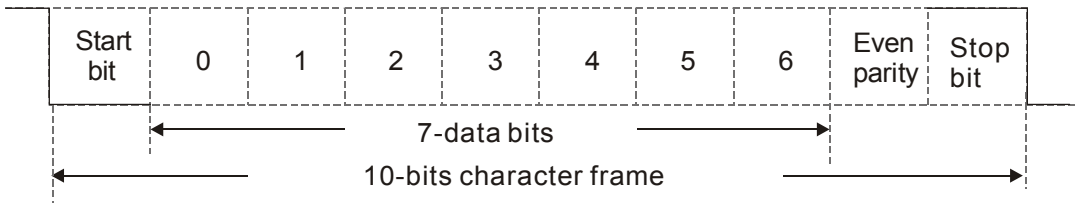

(7, O, 1)

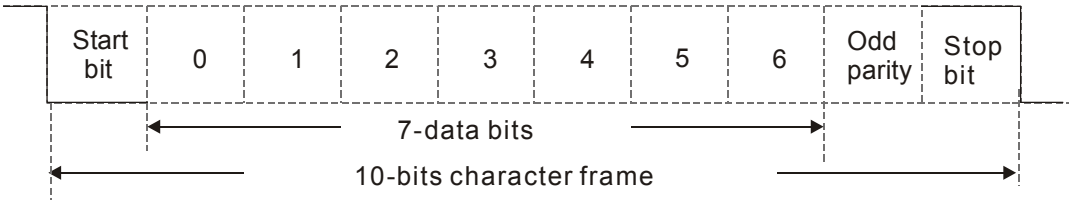

11-bit character frame (For RTU):

(8, N, 2)

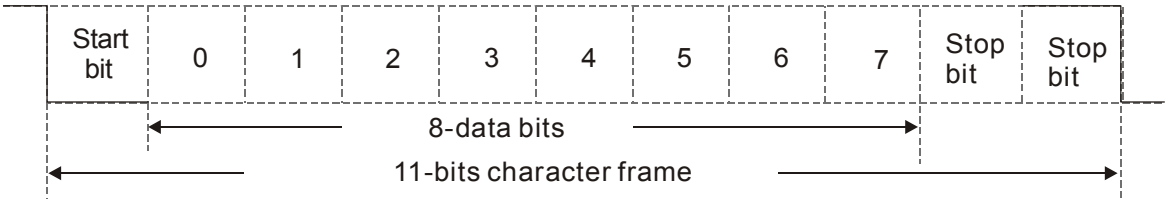

(8, E, 1)

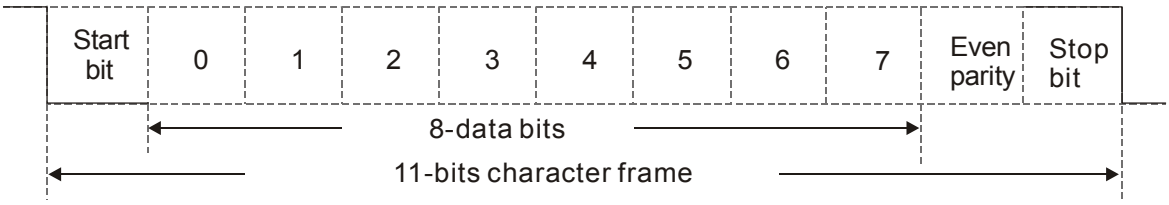

(8, O, 1)

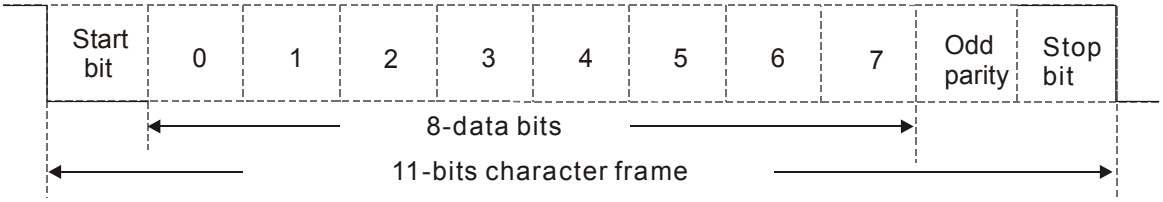

3. Communication Protocol

Communication Data Frame

ASCII mode :

STX	Start character = ‘ : ’ (3AH)
Address Hi	Communication address: 8-bit address consists of 2 ASCII codes
Address Lo	
Function Hi	Command code: 8-bit command consists of 2 ASCII codes
Function Lo	
DATA (n-1)	Contents of data: N x 8-bit data consist of 2n ASCII codes N ≤ 16, maximum of 32 ASCII codes (20 sets of data)
…….	
DATA 0	
LRC CHK Hi	LRC check sum: 8-bit check sum consists of 2 ASCII codes
LRC CHK Lo	
END Hi	End characters: END Hi = CR (0DH), END Lo = LF (0AH)
END Lo	

RTU mode:

START	A silent interval of more than 10 ms
Address	Communication address: 8-bit address
Function	Command code: 8-bit command
DATA (n-1)	Contents of data: N × 8-bit data, n ≤16
…….	
DATA 0	
CRC CHK Low	CRC check sum: 16-bit check sum consists of 2 8-bit characters
CRC CHK High	
END	A silent interval of more than 10 ms

Communication Address (Address)

00H: broadcast to all AC motor drives

01H: AC motor drive of address 01

0FH: AC motor drive of address 15

10H: AC motor drive of address 16

:

FEH: AC motor drive of address 254

Function code (Function) and DATA (Data characters)

03H: read data from register

06H: write single register

Example: reading continuous 2 data from register address 2102H, AMD address is 01H.

ASCII mode:

Command Message:

STX	‘:’
Address	‘0’
	‘1’
Function	‘0’
	‘3’
Starting register	‘2’
	‘1’
	‘0’
	‘2’
Number of register (count by word)	‘0’
	‘0’
	‘0’
	‘2’
LRC Check	‘D’
	‘7’
END	CR
	LF

Response Message

STX	‘:’
Address	‘0’
	‘1’
Function	‘0’
	‘3’
Number of register (count by byte)	‘0’
	‘4’
Content of starting register 2102H	‘1’
	‘7’
	‘7’
	‘0’
Content of register 2103H	‘0’
	‘0’
	‘0’
	‘0’
LRC Check	‘7’
	‘1’
END	CR
	LF

RTU mode:

Command Message:

Address	01H
Function	03H
Starting data register	21H
	02H
Number of register (count by world)	00H
	02H
CRC CHK Low	6FH
CRC CHK High	F7H

Response Message

Address	01H
Function	03H
Number of register (count by byte)	04H
Content of register address 2102H	17H
	70H
Content of register address 2103H	00H
	00H
CRC CHK Low	FEH
CRC CHK High	5CH

06H: single write, write single data to register.

Example: writing data 6000 (1770H) to register 0100H. AMD address is 01H.

ASCII mode:

Command Message:

STX	':'
Address	'0'
	'1'
Function	'0'
	'6'
Target register	'0'
	'1'
	'0'
	'0'
Register content	'1'
	'7'
	'7'
	'0'
LRC Check	'7'
	'1'
END	CR
	LF

Response Message

STX	':'
Address	'0'
	'1'
Function	'0'
	'6'
Target register	'0'
	'1'
	'0'
	'0'
Register content	'1'
	'7'
	'7'
	'0'
LRC Check	'7'
	'1'
END	CR
	LF

RTU mode:

Command Message:

Address	01H
Function	06H
Target register	01H
	00H
Register content	17H
	70H
CRC CHK Low	86H
CRC CHK High	22H

Response Message

Address	01H
Function	06H
Target register	01H
	00H
Register content	17H
	70H
CRC CHK Low	86H
CRC CHK High	22H

10H: write multiple registers (write multiple data to registers) (at most 20 sets of data can be written simultaneously)

Example: Set the multi-stage speed of AC motor drive (address is 01H):

Pr. 04-00 = 50.00 (1388H), Pr. 04-01 = 40.00 (0FA0H)

ASCII Mode

Command Message:

STX	':'
ADR 1	'0'
ADR 0	'1'
CMD 1	'1'
CMD 0	'0'
Target register	'0'
	'5'
	'0'
	'0'
Number of register (count by word)	'0'
	'0'
	'0'
	'2'
Number of register (count by Byte)	'0'
	'4'
The first data content	'1'
	'3'
	'8'
	'8'
The second data content	'0'
	'F'
	'A'
	'0'
LRC Check	'9'
	'A'
END	CR
	LF

Response Message

STX	':'
ADR 1	'0'
ADR 0	'1'
CMD 1	'1'
CMD 0	'0'
Target register	'0'
	'5'
	'0'
	'0'
Number of register (count by word)	'0'
	'0'
	'0'
	'2'
LRC Check	'E'
	'8'
END	CR
	LF

RTU mode:

Command Message:

ADR	01H
CMD	10H
Target register	05H
	00H
Number of register (Count by word)	00H
	02H
Quantity of data (Byte)	04
The first data content	13H
	88H
The second data content	0FH
	A0H
CRC Check Low	'9'
CRC Check High	'A'

Response Message:

ADR	01H
CMD 1	10H
Target register	05H
	00H
Number of register (Count by word)	00H
	02H
CRC Check Low	41H
CRC Check High	04H

Check sum

ASCII mode:

LRC (Longitudinal Redundancy Check) is calculated by summing up, module 256 and the values of the bytes from ADR1 to last data character then calculating the hexadecimal representation of the 2's-complement negation of the sum.

For example:

01H + 03H + 21H + 02H + 00H + 02H = 29H, the 2's-complement negation of 29H is **D7**H.

RTU mode:

CRC (Cyclical Redundancy Check) is calculated by the following steps:

Step 1: Load a 16-bit register (called CRC register) with FFFFH.

Step 2: Exclusive OR the first 8-bit byte of the command message with the low order byte of the 16-bit CRC register, putting the result in the CRC register.

Step 3: Examine the LSB of CRC register.

Step 4: If the LSB of CRC register is 0, shift the CRC register one bit to the right with MSB zero filling, then repeat step 3. If the LSB of CRC register is 1, shift the CRC register one bit to the right with MSB zero filling, Exclusive OR the CRC register with the polynomial value A001H, then repeat step 3.

Step 5: Repeat step 3 and 4 until eight shifts have been performed. When this is done, a complete 8-bit byte will have been processed.

Step 6: Repeat step 2 to 5 for the next 8-bit byte of the command message. Continue doing this until all bytes have been processed. The final contents of the CRC register are the CRC value. When transmitting the CRC value in the message, the upper and lower bytes of the CRC value must be swapped, i.e. the lower order byte will be transmitted first.

The following is an example of CRC generation using C language. The function takes two arguments:

Unsigned char* data ← a pointer to the message buffer

Unsigned char length ← the quantity of bytes in the message buffer

The function returns the CRC value as a type of unsigned integer.

```
Unsigned int crc_chk(unsigned char* data, unsigned char length)
 {
        int j;
        unsigned int reg_crc=0Xffff;
        while(length--){
              reg_crc ^= *data++;
              for(j=0;j<8;j++){
                    if(reg_crc & 0x01){   /* LSB(b0)=1 */
                          reg_crc=(reg_crc>>1) ^ 0Xa001;
                    }else{
                          reg_crc=reg_crc >>1;
                    }
              }
        }
        return reg_crc;                    // return register CRC
  }
```

4. Address list

Content	Register	Function	
AC motor drive parameters	GGnnH	GG means parameter group, nn means parameter number, for example, the address of Pr. 04-01 is 0401H.	
Command write only	2000H	bit 1~0	00B: No function
			01B: Stop
			10B: Run
			11B: JOG + RUN
		bit 3~2	Reserved
		bit 5~4	00B: No function
			01B: FWD
			10B: REV
			11B: Change direction
		bit 7~6	00B: 1st accel. / decel.
			01B: 2nd accel. / decel.
			10B: 3rd accel. / decel.
			11B: 4th accel. / decel.
		bit 11~8	000B: Master speed
			0001B: 1st Stage speed frequency
			0010B: 2nd Stage speed frequency
			0011B: 3rd Stage speed frequency
			0100B: 4th Stage speed frequency
			0101B: 5th Stage speed frequency
			0110B: 6th Stage speed frequency
			0111B: 7th Stage speed frequency
			1000B: 8th Stage speed frequency
			1001B: 9th Stage speed frequency
			1010B: 10th Stage speed frequency
			1011B: 11th Stage speed frequency
			1100B: 12th Stage speed frequency
			1101B: 13th Stage speed frequency
			1110B: 14th Stage speed frequency
			1111B: 15th Stage speed frequency
		bit 12	1: Enable bit 06-11 function
		bit 14~13	00B: No function
			01B: Operated by digital keypad
			10B: Operated by Pr. 00-21 setting
			11B: Change operation source
		bit 15	Reserved
	2001H	Frequency command(XXX.XX Hz)	
	2002H	bit 0	1: EF (external fault) on
		bit 1	1: Reset
		bit 2	1: B.B ON
		bit 15~3	Reserved
Status monitor read only	2100H	High byte: Warn code Low Byte: Error code	
	2101H	bit 1~0	AC motor drive operation status 00B: Drive stops 01B: Drive decelerating 10B: Drive standby 11B: Drive operating
		bit 2	1: JOG command
		bit 4~3	Operation direction 00B: FWD run 01B: From REV run to FWD run 10B: REV run 11B: From FWD run to REV run

Content	Register	Function	
		bit 8	1: Master frequency controlled by communication interface
		bit 9	1: Master frequency controlled by analog signal
		bit 10	1: Operation command controlled by communication interface
		bit 11	1: Parameter locked
		bit 12	1: Enable to copy parameters from keypad
		bit 15~13	Reserved
	2102H	Frequency command (XXX.XX Hz)	
	2103H	Output frequency (XXX.XX Hz)	
	2104H	Output current (XX.XX A). When current is higher than 655.35, it will shift decimal as (XXX.X A). The decimal can refer to High byte of 211F.	
	2105H	DC-BUS voltage (XXX.X V)	
	2106H	Output voltage (XXX.X V)	
	2107H	Current step number of multi-stage speed operation	
	2108H	Reserved	
	2109H	Counter value	
	210AH	Power factor angle (XXX.X)	
	210BH	Output torque (XXX.X %)	
	210CH	Actual motor speed (XXXXX rpm)	
	210DH	Number of PG feedback pulses (0~65535)	
	210EH	Number of PG2 pulse commands (0~65535)	
	210FH	Power output (X.XXX KWH)	
	2116H	Multi-function display (Pr. 00-04)	
	211BH	Max. operation frequency (Pr. 01-00) or Max. user defined value (Pr. 00-26) When Pr. 00-26 is 0, this value is equal to Pr. 01-00 setting When Pr. 00-26 is not 0, and the command source is Keypad, this value = Pr. 00-24 * Pr. 00-26 / Pr. 01-00 When Pr. 00-26 is not 0, and the command source is 485, this value = Pr. 09-10 * Pr. 00-26 / Pr. 01-00	
	211FH	High byte: decimal of current value (display)	
	2200H	Display output current (A). When current is higher than 655.35, it will shift decimal as (XXX.X A). The decimal can refer to High byte of 211F.	
	2201H	Display counter value (c)	
	2202H	Actual output frequency (XXXXX Hz)	
	2203H	DC-BUS voltage (XXX.X V)	
	2204H	Output voltage (XXX.X V)	
	2205H	Power angle (XXX.X)	
	2206H	Display actual motor speed kW of U, V, W (XXXXX kW)	
	2207H	Display motor speed in rpm estimated by the drive or encoder feedback (XXXXX rpm)	
	2208H	Display positive / negative output torque in %, estimated by the drive (t0.0: positive torque, -0.0: negative torque) (XXX.X %)	
	2209H	Display PG feedback (as Pr. 00-04 NOTE 1)	
	220AH	PID feedback value after enabling PID function (XXX.XX %)	
	220BH	Reserved	
	220CH	Display signal of ACI analog input terminal, 4-V20 mA / 0-10 V corresponds to 0.00~100.00% (2.) (as Pr. 00-04 NOTE 2)	
	220DH	Reserved	
	220EH	IGBT temperature of drive power module (XXX.X °C)	
	220FH	The temperature of capacitance (XXX.X °C)	
	2210H	The status of digital input (ON / OFF), refer to Pr. 02-12 (as Pr. 00-04 NOTE 3)	

Content	Register	Function
	2211H	The status of digital output (ON / OFF), refer to Pr. 02-18 (as Pr. 00-04 NOTE 4)
	2212H	The multi-step speed that is executing (S)
	2213H	The corresponding CPU pin status of digital input (d.) (as Pr. 00-04 NOTE 3)
	2214H	The corresponding CPU pin status of digital output (O.) (as Pr. 00-04 NOTE 4)
	2215H	Number of actual motor revolution (PG1 of PG card) (P.) it will start from 9 when the actual operation direction is changed or keypad display at stop is 0. Max. is 65535
	2216H	Pulse input frequency (PG2 of PG card) (XXX.XX Hz)
	2217H	Pulse input position (PG card PG2), maximum setting is 65535.
	2218H	Position command tracing error
	2219H	Display times of counter overload (XXX.XX %)
	221AH	GFF (XXX.XX %)
	221BH	DCbus voltage ripples (XXX.X V)
	221CH	PLC register D1043 data (C)
	221DH	Pole of Permanent Magnet Motor
	221EH	User page displays the value in physical measure
	221FH	Output Value of Pr. 00-05 (XXX.XX Hz)
	2220H	Number of motor turns when drive operates (keeping when drive stops, and reset to zero when operation)
	2221H	Operation position of motor (keeping when drive stops, and reset to zero when operation)
	2222H	Fan speed of the drive (XXX %)
	2223H	Control mode of the drive 0: speed mode 1: torque mode
	2224H	Carrier frequency of the drive (XX KHZ)
	2225H	Reserved
	2226H	Drive status bit 1~0 00b: No direction 01b: Forward 10b: Reverse bit 3~2 01b: Driver ready 10b: Error bit 4 0b: Motor drive did not output 1b: Motor drive did output bit 5 0b: No alarm 1b: Have Alarm
	2227H	Drive's estimated output torque (positive or negative direction) (XXXX Nt-m)
	2228H	Torque command (XXX.X %)
	2229H	KWH display (XXXX.X)
	222AH	MI7pulse input in Low Word
	222BH	MI7 pulse input in High Word
	222CH	Motor actual position in Low Word
	222DH	Motor actual position in High Word
	222EH	PID reference (XXX.XX %)
	222FH	PID offset (XXX.XX %)
	2230H	PID output frequency (XXX.XX Hz)
	2231H	Hardware ID
	2232H	Display auxiliary frequency
	2233H	Display master frequency
	2234H	Display frequency after addition and subtraction of auxiliary and master frequency

5. Exception response:

When drive is doing communication connection, if an error occurs drive will respond the error code and set the highest bit (bit 7) of code to 1 (function code AND 80H) then response to control system to know that an error occurred.

If keypad displays "CE-XX" as a warning message, "XX" is the error code at that time. Please refer to the meaning of error code in communication error for reference.

Example:

ASCII mode:

STX	':'
Address	'0'
	'1'
Function	'8'
	'6'
Exception code	'0'
	'2'
LRC CHK	'7'
	'7'
END	CR
	LF

RTU mode:

Address	01H
Function	86H
Exception code	02H
CRC CHK Low	C3H
CRC CHK High	A1H

The explanation of exception codes:

Exception code	Explanation
1	Function code is not supported or unrecognized.
2	Address is not supported or unrecognized.
3	Data is not correct or unrecognized.
4	Fail to execute this function code

09-09 Delay Time of Communication Response

Factory Setting: 2.0

Settings 0.0~200.0 ms

This parameter is the response delay time after AC motor drive receives communication command as shown in the following.

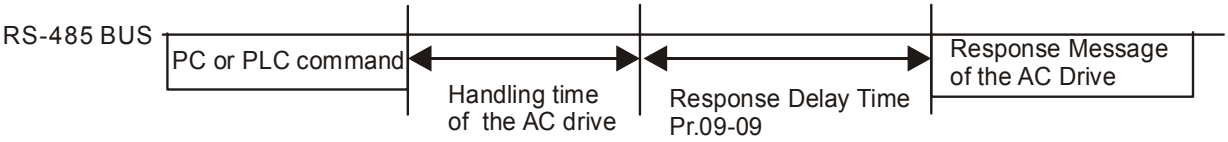

09-10 Main Frequency of the Communication

Factory Setting: 60.00

Settings 0.00~599.00 Hz

When Pr. 00-20 is set to 1 (RS-485 communication). The AC motor drive will save the last frequency command into Pr. 09-10 when abnormal turn-off or momentary power loss. After reboots the power, it will regard the frequency set in Pr. 09-10 if no new frequency command is inputted. When frequency command of 485 is changed (the source of frequency command needs to be set as MODBUS), this parameter is also be changed.

09-11	Block Transfer 1
09-12	Block Transfer 2
09-13	Block Transfer 3
09-14	Block Transfer 4
09-15	Block Transfer 5
09-16	Block Transfer 6
09-17	Block Transfer 7
09-18	Block Transfer 8
09-19	Block Transfer 9
09-20	Block Transfer 10
09-21	Block Transfer 11
09-22	Block Transfer 12
09-23	Block Transfer 13
09-24	Block Transfer 14
09-25	Block Transfer 15
09-26	Block Transfer 16

Factory Setting: 0

Settings 0~65535

There is a group of block transfer parameter available in the AC motor drive (Pr. 09-11 to Pr. 09-26). Through communication code 03H, user can use them (Pr. 09-11 to Pr. 09-26) to save those parameters that you want to read.

09-30 Communication Decoding Method

Factory Setting: 1

Settings 0: Decoding method 1

1: Decoding method 2

		Decoding Method 1	Decoding Method 2
Source of Operation Control	Digital Keypad	Digital keypad controls the drive action regardless decoding method 1 or 2.	
	External Terminal	External terminal controls the drive action regardless decoding method 1 or 2.	
	RS-485	Refer to address: 2000h~20FFh	Refer to address: 6000h ~ 60FFh
	CANopen	Refer to index: 2020-01h~2020-FFh	Refer to index:2060-01h ~ 2060-FFh
	Communication Card	Refer to address: 2000h ~ 20FFh	Refer to address: 6000h ~ 60FFh
	PLC	PLC commands the drive action regardless decoding method 1 or 2.	

09-33 PLC Command Force to 0

Factory Setting：0

Setting 0~65535

It defines the action that before PLC scans time sequence, the frequency command or speed command needs to be cleared as 0 or not.

bit	Explanation
bit 0	Before PLC scan, set up PLC target frequency = 0
bit 1	Before PLC scan, set up the PLC target torque = 0
bit 2	Before PLC scan, set up the speed limit of torque control mode = 0

09-35 PLC Address

Factory Setting: 2

Settings 1~254

09-36 CANopen Slave Address

Factory Setting: 0

Settings
0: Disable
1~127

09-37 CANopen Speed

Factory Setting: 0

Settings
0: 1 Mbps
1: 500 kbps
2: 250 kbps
3: 125 kbps
4: 100 kbps (Delta only)
5: 50 kbps

09-39 CANopen Warning Record

Factory Setting: 0

Settings
bit 0: CANopen software disconnection 1 (CANopen Guarding Time out)
bit 1: CANopen software disconnection 2 (CANopen Heartbeat Time out)
bit 3: CANopen SDO time out
bit 4: CANopen SDO buffer overflow
bit 5: CANopen hardware disconnection warning (Can Bus Off)
bit 6: Error protocol of CANOPEN

09-40 CANopen Decoding Method

Factory Setting: 1

Settings
0: Delta defined decoding method
1: CANopen Standard DS402 protocol

09-41 CANopen Communication Status

Factory Setting: Read Only

Settings
0: Node Reset State
1: Com Reset State
2: Boot up State
3: Pre Operation State
4: Operation State
5: Stop State

09-42 CANopen Control Status

Factory Setting: Read Only

Settings
0: Not ready for use state
1: Inhibit start state
2: Ready to switch on state
3: Switched on state
4: Enable operation state
7: Quick stop active state
13: Error reaction activation state
14: Error state

09-43 CANopen Reset Index

Factory Setting: 65535

Settings
bit 0: CANopen reset, the internal address 20XX is 0
bit 1: CANopen reset, the internal address 264X is 0
bit 2: CANopen reset, the internal address 26AX is 0
bit 3: CANopen reset, the internal address 60XX is 0

09-60 Identifications for Communication Card

Factory Setting: ##

Settings
0: No communication card
1: DeviceNet Slave
2: Profibus-DP Slave
3: CANopen Slave
4: Modbus-TCP Slave
5: EtherNet/IP Slave
10: Backup Power Supply

09-61 Firmware Version of Communication Card

09-62 Product Code

09-63 Error code

Factory Setting: ##

Settings Read only

09-70 Address of Communication Card

Factory Setting: 1

Settings
DeviceNet: 0-63
Profibus-DP: 1-125

09-71 Setting of DeviceNet Speed

Factory Setting: 2

Settings Standard DeviceNet:
0: 125 Kbps
1: 250 Kbps
2: 500 Kbps
3: 1 Mbps (Delta Only)

Non standard DeviceNet: (Delta only)

0: 10 Kbps
1: 20 Kbps
2: 50 Kbps
3: 100 Kbps
4: 125 Kbps
5: 250 Kbps
6: 500 Kbps
7: 800 Kbps
8: 1 Mbps

09-72 Other Setting of DeviceNet Speed

Factory Setting: 0

Settings 0: Disable

In this mode, baud rate can only be 125 Kbps, 250 Kbps, 500 Kbps, 1 Mbps in standard DeviceNet speed

1: Enable

In this mode, the baud rate of DeviceNet can be same as CANopen (0-8).

- It needs to use with Pr. 09-71.
- Setting 0: the baud rate can only be set to 0, 1, 2 or 3.
- Setting 1: setting of DeviceNet communication rate can be the same as CANopen (setting 0-8).

09-75 IP Configuration of the Communication Card

Factory Setting: 0

Settings 0: Static IP

1: Dynamic IP (DHCP)

- Setting 0: it needs to set IP address manually.
- Setting 1: IP address will be auto set by host controller.

09-76 IP Address 1 of the Communication Card
09-77 IP Address 2 of the Communication Card
09-78 IP Address 3 of the Communication Card
09-79 IP Address 4 of the Communication Card

Factory Setting: 0

Settings 0~255

- Pr. 09-76~09-79 should be used with communication card.

09-80 Address Mask 1 of the Communication Card
09-81 Address Mask 2 of the Communication Card
09-82 Address Mask 3 of the Communication Card
09-83 Address Mask 4 of the Communication Card

Factory Setting: 0

Settings 0~255

09-84	Getway Address 1 of the Communication Card
09-85	Getway Address 2 of the Communication Card
09-86	Getway Address 3 of the Communication Card
09-87	Getway Address 4 of the Communication Card

Factory Setting: 0

Settings 0~255

09-88	Password for Communication Card (Low word)
09-89	Password for Communication Card (High word)

Factory Setting: 0

Settings 0~99

09-90	Reset Communication Card

Factory Setting: 0

Settings 0: Disable

1: Reset, return to factory setting

09-91	Additional Setting for Communication Card

Factory Setting: 0

Settings bit 0: Enable IP filter

bit 1: Internet parameters enable (1 bit)

When IP address is set up, this bit will be enabled. After updating the parameters of communication card, this bit will change to disable.

bit 2: Login password enable (1 bit)

When enter login password, this bit will be enabled. After updating the parameters of communication card, this bit will change to disable.

09-92	Status of Communication Card

Factory Setting: 0

Settings bit 0: Password enable

When the communication card is set with password, this bit is enabled. When the password is clear, this bit will be disabled.

10 Speed Feedback Control Parameters

✓ This parameter can be set during operation.

In this parameter group, ASR is the abbreviation for Adjust Speed Regulator and PG is the abbreviation for Pulse Generator.

10-00 Encoder Type Selection

Factory Setting: 0

Settings 0: Disabled
5. Pulse input (MI7)

📖 If you use MI7 single-phase pulse input function, you only can choose one of them: Encoder input type (Pr. 10-02) or Pulse input type setting (Pr. 10-16).When you set speed feedback function, pulse command can NOT be set, it needs to cancel the speed feedback function first thus you can set the pulse command function. Speed feedback function should be used with Pr. 10-02 = 5 (single-phase input (MI7)), drive will calculate MI7 single-phase pulse input speed when control modes are VF, VFPG and SVC. In addition if MI7 single-phase pulse input is using for speed feedback of close loop control, it only can use in VFPG close loop control mode.

10-01 Encoder Pulse Per Round

Factory Setting: 600

Settings 1~20000

📖 This parameter can set the encoder pulse per revolution (PPR). It is defined as a feedback control signal source when using PG , the encoder must set the pulse number for motor rotating a circle, it means the pulse number generated by A / B phase cycle.

📖 This setting is also the encoder resolution. With the higher resolution, the speed control will be more accurate.

📖 If this parameter is setting error, it will cause motor stall, drive overcurrent, or magnetic pole origin detection error of PM motor in closed loop control. When using PM motor, the pole zero point detection (Pr. 05-00 = 13) must be done again if the content of this parameter is modified.

10-02 Encoder Input Type Setting

Factory Setting: 0

Settings 0: Disable
5: Single-phase input (MI7)

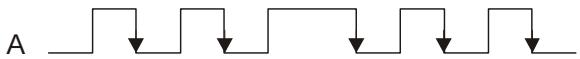

✓ 10-04 Electrical Gear at Load Side A1
✓ 10-05 Electrical Gear at Motor Side B1
✓ 10-06 Electrical Gear at Load Side A2
✓ 10-07 Electrical Gear at Motor Side B2

Factory Setting: 100

Settings 1~65535

📖 Pr. 10-04 to 10-07 can be used with the multi-function input terminal (set to 48) to switch to Pr. 10-04~10-05 or Pr. 10-06~10-07, shown as follows.

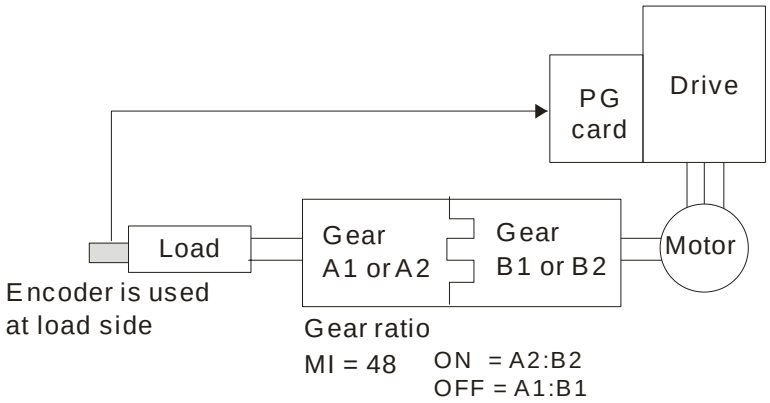

10-08 Treatment for Encoder Feedback Fault

Factory Setting: 2

Settings 0: Warn and keep operation
1: Warn and ramp to stop
2: Warn and coast to stop

10-09 Detection Time of Encoder Feedback Fault

Factory Setting: 1.0

Settings 0.0~10.0 sec. (0: No function)

When encoder loss, encoder signal error, pulse signal setting error or signal error, if time exceeds the detection time for encoder feedback fault (Pr. 10-09), the encoder signal error will occur. Refer to Pr. 10-08 for encoder feedback fault treatment.

When speed controller signal is abnormal, if time exceeds the detection time for encoder speed controller fault (Pr. 10-09), the feedback fault will occur. Refer to Pr. 10-08 for encoder feedback fault treatment.

10-10 Encoder Stall Level

Factory Setting: 115

Settings 0~120 % (0: No function)

This parameter determines the maximum encoder feedback signal allowed before a fault occurs. (Max. output frequency Pr. 01-00 = 100 %)

10-11 Detection Time of Encoder Stall

Factory Setting: 0.1

Settings 0.0~2.0 sec.

10-12 Treatment for Encoder Stall

Factory Setting: 2

Settings 0: Warn and keep operation
1: Warn and ramp to stop
2: Warn and coast to stop

When drive output frequency exceeds encoder stall level (Pr. 10-10), it will start to accumulate time, when the error time exceeds detection time of encoder stall (Pr. 10-11), it will start to implement treatment for encoder stall, please refer to the settings of this parameter for detail.

10-13 Encoder Slip Range

Factory Setting: 50

Settings 0~50 % (0: No function)

10-14 Detection Time of Encoder Slip

Factory Setting: 0.5

Settings 0.0~10.0 sec.

10-15 Treatment for Encoder Stall and Slip Error

Factory Setting: 2

Settings 0: Warn and keep operation
1: Warn and ramp to stop
2: Warn and coast to stop

Action principle of Pr. 10-13~Pr. 10-15:
When the value of (rotation speed – motor frequency) exceeds Pr. 10-13 setting, detection time exceeds Pr. 10-14; it will start to accumulate time. If detection time exceeds Pr. 10-14, the encoder feedback signal error will occur. Refer to Pr. 10-15 encoder stall and slip error treatment.

10-16 Pulse Input Type Setting

Factory Setting: 0

Settings 0: Disabled
5: Single-phase input (MI7)

When this setting is different from Pr. 10-02 setting and the source of the frequency command is pulse input (Pr. 00-20 is set to 5), it will cause 4 times frequency problem.
Example: Assume that Pr. 10-01 = 1024, Pr. 10-02 = 1, Pr. 10-16 = 3, Pr. 00-20 = 5, MI = 37 and ON, the pulse needed to rotate the motor a revolution is 4096.

Assume that Pr. 10-01 = 1024, Pr. 10-02 = 1, Pr. 10-16 = 1, Pr. 00-20 = 5, MI = 37 and ON, the pulse needed to rotate the motor a revolution is 1024.

10-17 Electrical Gear A
10-18 Electrical Gear B

Factory Setting: 100

Settings 1~65535

Rotation speed = pulse frequency / encoder pulse (Pr. 10-01) * Electrical Gear A / Electrical Gear B.

10-21 PG2 Pulse Input Speed Command Filter Time

Factory Setting: 0.100

Settings 0.000~65.535 sec.

When Pr. 00-20 is set to 5 and multi-function input terminal is set to 37 (OFF), the pulse command will be regarded as frequency command. This parameter can be used to suppress the jump of speed command.

10-22 PG2 Pulse Input Speed Command Mode

Factory Setting: 0

Settings 0: Electronic frequency

1: Mechanical frequency (base on pole pair)

10-29 Top Limit of Frequency Deviation

Factory Setting: 20.00

Settings 0.00~100.00 Hz

- This parameter can limit the maximum of frequency deviation.
- When this parameter is set too large, abnormal feedback malfunction will occur.
- If the application needs higher setting of Pr. 10-29, please note that: Higher setting of Pr. 10-29 value will result in larger motor slip, which will cause PG Error (PGF3, PGF4) easily. In this case, setting Pr. 10-10 and Pr. 10-13 as 0 will disable PGF3 and PGF4 detection, but must make sure the MI7 wiring and application is correct. Otherwise it may lose the instant PG protection. Too High Pr. 10-29 setting is not a common setting.

10-31 I/F Mode, Current Command

Factory Setting: 40

Settings 0~150 % rated current of motor

- The parameter is the current command of the drive in low-speed area (low-speed area: frequency command < Pr. 10-39). When it is stalling on heavy duty start-up or forward / reverse with load, adjust the parameter (increase). If inrush current is too high to cause oc stall, then decrease it.

10-32 PM FOC Sensorless Speed Estimator Bandwidth

Factory Setting: 5.00

Settings 0.00~600.00 Hz

- The parameter is speed estimator bandwidth. Adjust the parameter will influence the stability and the accuracy of speed for motor.
- If there is low frequency vibrates (the waveform is similar to sin wave) during the process, then increase the bandwidth. If there is high frequency vibrates (the waveform vibrates extremely and is like spur), then decrease the bandwidth.

10-34 PM Sensorless Speed Estimator Low-pass Filter Gain

Factory Setting: 1.00

Settings 0.00~655.35

- Adjust the parameter will influence the response speed of speed estimator.
- If there is low frequency vibrates (the waveform is similar to sin wave) during the process, then increase the gain. If there is high frequency vibrates (the waveform vibrates extremely and is like spur), then decrease the gain.

10-39 Frequency Point when Switch from I/F Mode to PM Sensorless Mode

Factory Setting: 20.00

Settings 0.00~599.00 Hz

- The parameter is the switch point which is from low frequency to high frequency.
- If the switch point is too low, motor will not generate enough back emf to let the speed estimator measure the right position and speed of rotator, and cause stall and oc when the frequency of switch point is running.
- If the switch point is too high, the active area of I/F will be too wide, which will generate larger current and cannot save energy. (The reason is that if the current of Pr. 10-31 sets too high, and the high switch point will make the drive keeps outputting with the setting value of Pr. 10-31).

10-40 Frequency Point when Switch from PM Sensorless Mode to I/F Mode

Factory Setting: 20.00

Settings 0.00~599.00 Hz

- The parameter is the switch point which is from high frequency to low frequency.
- If the switch point is too low, motor will not generate enough back emf to let the speed estimator measure the right position and speed of rotator when the frequency of switch point is running.
- If the switch point is too high, the active area of I/F will be too wide, which will generate larger current and cannot save energy. (The reason is that if the current of Pr. 10-31 sets too high, and the high switch point will make the drive keeps outputting with the setting value of Pr. 10-31)

10-42 Initial Angle Detection Pulse Value

Factory Setting: 1.0

Settings 0.0~3.0

- The angle detection is fixed to 3: Use the pulse injection method to start. The parameter influences the value of pulse during the angle detection. The larger the pulse is, the higher of the accuracy of rotator's position. But larger pulse might cause oc easily.
- Increase the parameter when the running direction and the command are opposite while start-up. If oc occurs in the start-up moment, then decrease the parameter.
- Please refer to Chapter 12-2 Adjustment & Application for detailed motor adjustment procedure.

10-49 Zero Voltage Time while Start Up

Factory Setting: 00.000

Settings 00.000~60.000 sec.

- This parameter is valid only when the setting of Pr. 07-12 (Speed tracking during start-up) = 0.
- When the motor is in static status at the startup, the accuracy to estimate angles will be increased. In order to make the motor in "static status", 3 phase of drive output 0V to motor to reach this goal. Pr. 10-49 setting time is the length of time when 3 phase output 0V.
- It is possible that even when this parameter is being applied but the motor at the installation site cannot go in to the "static status" caused by the inertia or by any external force. So, if the motor doesn't go into a complete "static status" in 0.2 sec., increase this setting value appropriately.
- If Pr. 10-49 sets too high, the start-up time will be longer obviously. If it is too low, then the braking performance will be weak.

10-51 Injection Frequency

Factory Setting: 500

Settings 0~1200 Hz

- This parameter is a high frequency injection command in PM SVC control mode, and usually it doesn't need to be adjusted. But if a motor's rated frequency (i.e. 400 Hz) is too close to the frequency setting of this parameter (i.e. factory setting 500 Hz), the accuracy of angles detected will be affected. Therefore, refer to the setting of Pr. 01-01 before adjusting this parameter.
- If the setting value of Pr. 00-17 is lower than Pr. 10-51*10, then increase the frequency of carrier wave.
- Pr. 10-51 is valid only when Pr. 10-53 = 2.

10-52 Injection Magnitude

Factory Setting: 15.0 / 30.0

Settings 0.0~200.0 V

- The parameter is magnitude command of high frequency injection signal in PM SVC control mode.
- Increasing the parameter can get more accurate estimated value of angle. But the noise of electromagnetic might be louder if the setting value is too high.
- This parameter will be received when motor's parameter is "Auto". And this parameter will influence the accuracy of angel's estimation.
- When the ratio of salient pole (Lq / Ld) is lower, increase Pr. 10-52 to make angle detection be accurate.
- Pr. 10-52 is valid only when Pr. 10-53 = 2.

10-53 Position Detection Method

Factory Setting: 0

Settings
0: Disabled
1: Internal 1/4 rated current attracting the rotor to zero degrees
2: High frequency injection
3: Pulse injection

- It is suggested to set as "2" if it is IPM; set as "3" if it is SPM. If there is bad effect when set as "2" or "3", then set as "1".

11 Advanced Parameters

✓ This parameter can be set during operation.

In this parameter group, ASR is the abbreviation for Adjust Speed Regulator.

11-00 System Control

Factory Setting: 0

Settings bit 3: Dead time compensation closed
bit 7: Selection to save or not save the frequency

📖 bit 7 = 0: frequency is saved before power turns off. When power turns ON again, the displayed frequency will be the memorized frequency.
bit 7 = 1: frequency is not saved before power turns off. When power turns ON again, the displayed frequency will be 0.00 Hz.

✓ 11-06 ASR 1 Gain

Factory Setting: 10

Settings 0~40 Hz (IM) / 1~100 Hz (PM)

✓ 11-07 ASR 1 Integral Time

Factory Setting: 0.100

Settings 0.000~10.000 sec.

11-41 PWM Mode Selection

Factory Settings: 2

Settings 0: 2-phase
2: Space vector

📖 When setting is 2-phase mode, it can reduce the drive power components losses effectively and provide better performance in the long wire applications.

📖 When setting is space vector mode, it can reduce the power loss and electromagnetic noise of motor effectively.

✓ 11-42 System Control Flag

Factory Settings: 0000

Settings 0000~FFFFh

bit No.	Function	Description
0	Reserved	
1	FWD / REV action control	0: FWD / REV cannot be controlled by Pr. 02-12 bit 0 & 1 1: FWD / REV can be controlled by Pr. 02-12 bit 0 & 1
2~15	Reserved	

13 Macro / User Define Macro

13-00 Application Selection

Factory Setting: 00

Settings 00: Disabled
01: User parameter
02: Compressor
03: Fan
04: Pump
05: Conveyor
06: Machine tool
07: Packing
08: Textiles

Note: After selecting the macro, some of default values will be adjusted automatically according to the application selection.

Group setting 02: Compressor

The following table of contents is the relevant application parameters used for compressor settings.

Pr.	Explanation	Settings
00-11	Control of speed mode	0 (V/F control mode)
00-16	Load selection	0 (Normal load)
00-17	Carrier frequency	Factory default setting
00-20	Source of the master frequency command (AUTO)	2 (External analog input)
00-21	Source of the operation command (AUTO)	1 (External terminals)
00-22	Stop method	0 (Ramp to stop)
00-23	Control of motor direction	1 (Disable reverse)
01-00	Max. operation frequency of motor 1	Factory default setting
01-01	Output frequency of motor 1	Factory default setting
01-02	Output voltage of motor 1	Factory default setting
01-03	Mid-point frequency 1 of motor 1	Factory default setting
01-04	Mid-point voltage 1 of motor 1	Factory default setting
01-05	Mid-point frequency 2 of motor 1	Factory default setting
01-06	Mid-point voltage 2 of motor 1	Factory default setting
01-07	Min. output frequency of motor 1	Factory default setting
01-08	Min. output voltage of motor 1	Factory default setting
01-11	Output frequency lower limit	20 (Hz)
01-12	Accel. time 1	20 (s)
01-13	Decel. time 1	20 (s)
03-00	Analog input selection (AVI)	0 (No function)
03-01	Analog input selection (ACI)	1 (Frequency command)
05-01	Full-load current of induction motor 1 (A)	Factory default setting
05-03	Rated speed of induction motor 1 (rpm)	Factory default setting
05-04	Pole number of induction motor 1	Factory default setting

Group setting 03: Fan

The following table of contents is the relevant application parameters used for fan settings.

Pr.	Explanation	Settings
00-11	Control of speed mode	0 (VF)
00-16	Load selection	0 (Normal load)
00-17	Carrier frequency	Factory default setting
00-20	Source of the master frequency command (AUTO)	2 (External analog input)
00-21	Source of the operation command (AUTO)	1 (External terminals)
00-22	Stop method	1 (Coast to stop)
00-23	Control of motor direction	1 (Disable reverse)
00-30	Source of the master frequency command (HAND)	0 (Digital keypad)
00-31	Source of the operation command (HAND)	0 (Digital keypad)
01-00	Max. operation frequency of motor 1	Factory default setting
01-01	Output frequency of motor 1	Factory default setting
01-02	Output voltage of motor 1	Factory default setting
01-03	Mid-point frequency 1 of motor 1	Factory default setting
01-04	Mid-point voltage 1 of motor 1	Factory default setting
01-05	Mid-point frequency 2 of motor 1	Factory default setting
01-06	Mid-point voltage 2 of motor 1	Factory default setting
01-07	Min. output frequency of motor 1	Factory default setting
01-08	Min. output voltage of motor 1	Factory default setting
01-10	Output frequency upper limit	50 (Hz)
01-11	Output frequency lower limit	35 (Hz)
01-12	Accel. time 1	15 (s)
01-13	Decel. time 1	15 (s)
01-43	V/F curve selection	2 (2nd V/F curve)
02-05	Multi-function input command 5 (MI5)	16 (Rotating speed command from ACI)
02-16	Multi-function output 2 (MO1)	11 (Malfunction indication)
02-17	Multi-function output 3 (MO2)	1 (Indication during RUN)
03-00	Analog input selection (AVI)	1 (Frequency command)
03-01	Analog input selection (ACI)	1 (Frequency command)
03-28	AVI terminal input selection	0 (0-10V)
03-29	ACI terminal input selection	1 (0-10V)
03-31	AFM output selection	0 (0-10V)
03-50	Analog input curve selection	1 (3 point curve of AVI)
07-06	Restart after momentary power loss	2 (Speed tracking by minimum output frequency)
07-11	Restart times after fault	5 (times)
07-33	Return time of fault restart	60 (s)

Group setting 04: Pump

The following table of contents is the relevant application parameters used for pump settings.

Pr.	Explanation	Settings
00-11	Control of speed mode	0 (VF)
00-16	Load selection	0 (Normal load)
00-20	Source of the master frequency command (AUTO)	2 (External analog input)
00-21	Source of the operation command (AUTO)	1 (External terminals)
00-23	Control of motor direction	1 (Disable reverse)
01-00	Max. operation frequency of motor 1	Factory default setting
01-01	Output frequency of motor 1	Factory default setting
01-02	Output voltage of motor 1	Factory default setting
01-03	Mid-point frequency 1 of motor 1	Factory default setting
01-04	Mid-point voltage 1 of motor 1	Factory default setting
01-05	Mid-point frequency 2 of motor 1	Factory default setting
01-06	Mid-point voltage 2 of motor 1	Factory default setting
01-07	Min. output frequency of motor 1	Factory default setting
01-08	Min. output voltage of motor 1	Factory default setting
01-10	Output frequency upper limit	50 (HZ)
01-11	Output frequency lower limit	35 (HZ)
01-12	Accel. time 1	15 (s)
01-13	Decel. time 1	15 (s)
01-43	V/F curve selection	2 (2nd V/F curve)
07-06	Restart after momentary power loss	2 (Speed tracking by minimum output frequency)
07-11	Restart times after fault	5 (times)
07-33	Return Time of Fault Restart	60 (s)

Group setting 05: Conveyor

The following table of contents is the relevant application parameters used for conveyor settings.

Pr.	Explanation	Settings
00-11	Control of speed mode	0 (VF)
00-16	Load selection	0 (Normal load)
00-20	Source of the master frequency command (AUTO)	2 (External analog input)
00-21	Source of the operation command (AUTO)	1 (External terminals)
01-00	Max. operation frequency of motor 1	Factory default setting
01-01	Output frequency of motor 1	Factory default setting
01-02	Output voltage of motor 1	Factory default setting
01-03	Mid-point frequency 1 of motor 1	Factory default setting

Pr.	Explanation	Settings
01-04	Mid-point voltage 1 of motor 1	Factory default setting
01-05	Mid-point frequency 2 of motor 1	Factory default setting
01-06	Mid-point voltage 2 of motor 1	Factory default setting
01-07	Min. output frequency of motor 1	Factory default setting
01-08	Min. output voltage of motor 1	Factory default setting
01-12	Accel. time 1	10 (s)
01-13	Decel. time 1	10 (s)

Group setting 06: Machine tool

The following table of contents is the relevant application parameters used for machine tool settings.

Pr.	Explanation	Settings
00-11	Control of speed mode	0 (VF)
00-17	Carrier frequency	Factory default setting
00-20	Source of the master frequency command (AUTO)	2 (External analog input)
00-21	Source of the operation command (AUTO)	1 (External terminals)
01-00	Max. operation frequency of motor 1	Factory default setting
01-01	Output frequency of motor 1	Factory default setting
01-02	Output voltage of motor 1	Factory default setting
01-03	Mid-point frequency 1 of motor 1	0
01-04	Mid-point voltage 1 of motor 1	0
01-05	Mid-point frequency 2 of motor 1	0
01-06	Mid-point voltage 2 of motor 1	0
01-07	Min. output frequency of motor 1	Factory default setting
01-08	Min. output voltage of motor 1	Factory default setting
01-12	Accel. time 1	5 (s)
01-13	Decel. time 1	5 (s)
01-24	S-curve acceleration begin time 1	0
01-25	S-curve acceleration arrival time 2	0
01-26	S-curve deceleration begin time 1	0
01-27	S-curve deceleration arrival time 2	0
02-03	Multi-function input command 3 (MI3)	1 (Multi-stage speed command 1)
02-04	Multi-function input command 4 (MI4)	2 (Multi-stage speed command 2)
02-13	Multi-function output 1 RY1	11 (Malfunction indication)
02-16	Multi-function output 2 (MO1)	1 (Indication during RUN)
02-17	Multi-function output 3 (MO2)	2 (Operation speed attained)
03-00	Analog input selection (AVI)	1 (Frequency command)
06-01	Over-voltage stall prevention	0 (Disabled)

06-03	Over-current stall prevention during acceleration	0 (Disabled)
06-04	Over-current stall prevention during operation	0 (Disabled)
06-05	Accel. / Decel. time selection of stall prevention at constant speed	0 (By current accel. / decel. time)
07-01	DC brake current level	20 (%)
07-03	DC brake time at stop	0.3 (s)
07-04	DC brake start frequency	0 (Hz)
07-23	Auto voltage regulation (AVR) function	1 (Disable AVR)

Group setting 07: Packing

The following table of contents is the relevant application parameters used for packing settings.

Pr.	Explanation	Settings
00-11	Control of speed mode	0 (VF)
00-20	Source of the master frequency command (AUTO)	0 (Digital keypad)
00-21	Source of the operation command (AUTO)	2 (Communication RS-485 input)
02-00	2-wire / 3-wire operation control	1: 2-wire mode 1, power on for operation control (M1: FWD / STOP, M2: REV / STOP)
01-00	Max. operation frequency of motor 1	Factory default setting
01-01	Output frequency of motor 1	Factory default setting
01-02	Output voltage of motor 1	Factory default setting
01-03	Mid-point frequency 1 of motor 1	Factory default setting
01-04	Mid-point voltage 1 of motor 1	Factory default setting
01-05	Mid-point frequency 2 of motor 1	Factory default setting
01-06	Mid-point voltage 2 of motor 1	Factory default setting
01-07	Min. output frequency of motor 1	Factory default setting
01-08	Min. output voltage of motor 1	Factory default setting
01-12	Accel. time 1	10 (s)
01-13	Decel. time 1	10 (s)
01-24	S-curve acceleration begin time 1	Factory default setting
01-25	S-curve acceleration arrival time 2	Factory default setting
01-26	S-curve deceleration begin time 1	Factory default setting
01-27	S-curve deceleration arrival time 2	Factory default setting
03-00	Analog input selection (AVI)	1 (Frequency command)
03-28	AVI terminal input selection	Factory default setting

Group setting 08: Textiles

The following table of contents is the relevant application parameters used for textiles settings.

Pr.	Explanation	Settings
00-11	Control of speed mode	0 (VF)
00-20	Source of the master frequency command (AUTO)	1 (Communication RS-485 input)
00-21	Source of the operation command (AUTO)	1 (External terminals)
01-00	Max. operation frequency of motor 1	Factory default setting
01-01	Output frequency of motor 1	Factory default setting
01-02	Output voltage of motor 1	Factory default setting
01-03	Mid-point frequency 1 of motor 1	Factory default setting
01-04	Mid-point voltage 1 of motor 1	Factory default setting
01-05	Mid-point frequency 2 of motor 1	Factory default setting
01-06	Mid-point voltage 2 of motor 1	Factory default setting
01-07	Min. output frequency of motor 1	Factory default setting
01-08	Min. output voltage of motor 1	Factory default setting
01-12	Accel. time 1	10 (s)
01-13	Decel. time 1	10 (s)
01-24	S-curve acceleration begin time 1	0.2 (s)
01-25	S-curve acceleration arrival time 2	0.2 (s)
01-26	S-curve deceleration begin time 1	0.2 (s)
01-27	S-curve deceleration arrival time 2	0.2 (s)
06-03	Over-current stall prevention during acceleration	180 (%)
06-04	Over-current stall prevention during operation	180 (%)
06-07	Over-torque detection level (motor 1)	200 (%)
07-19	Fan cooling control	2: When the AC motor drive runs, the fan is ON. When the AC motor drive stops, the fan is OFF

13-01 ~ 13-50	Application Parameters (User Defined)

14 Protection Parameters (2)

✓This parameter can be set during operation.

14-50	Output Frequency at Malfunction 2
14-54	Output Frequency at Malfunction 3
14-58	Output Frequency at Malfunction 4
14-62	Output Frequency at Malfunction 5
14-66	Output Frequency at Malfunction 6

Factory Setting: Read only

Settings 0.00~599.00 Hz

📖 When error occurs, user can check output frequency at malfunction. If the error happens again, this parameter will cover previous record.

14-51	DC Voltage at Malfunction 2
14-55	DC Voltage at Malfunction 3
14-59	DC Voltage at Malfunction 4
14-63	DC Voltage at Malfunction 5
14-67	DC Voltage at Malfunction 6

Factory Setting: Read only

Settings 0.0~6553.5 V

📖 When error occurs, user can check DC voltage at malfunction. If the error happens again, this parameter will cover previous record.

14-52	Output Current at Malfunction 2
14-56	Output Current at Malfunction 3
14-60	Output Current at Malfunction 4
14-64	Output Current at Malfunction 5
14-68	Output Current at Malfunction 6

Factory Setting: Read only

Settings 0.00~655.35 Amp

📖 When error occurs, user can check output current at malfunction. If the error happens again, this parameter will cover previous record.

14-53	IGBT Temperature at Malfunction 2
14-57	IGBT Temperature at Malfunction 3
14-61	IGBT Temperature at Malfunction 4
14-65	IGBT Temperature at Malfunction 5
14-69	IGBT Temperature at Malfunction 6

Factory Setting: Read only

Settings -3276.7~3276.7 ^{o}C

📖 When error occurs, user can check IGBT temperature at malfunction. If the error happens again, this parameter will cover previous record.

14-70	Fault Record 7
14-71	Fault Record 8
14-72	Fault Record 9
14-73	Fault Record 10

Factory Setting: 0

Settings

0: No fault record

1: Over-current during acceleration (ocA)

2: Over-current during deceleration (ocd)

3: Over-current during constant speed (ocn)

4: Ground fault (GFF)

6: Over-current at stop (ocS)

7: Over-voltage during acceleration (ovA)

8: Over-voltage during deceleration (ovd)

9: Over-voltage during constant speed (ovn)

10: Over-voltage at stop (ovS)

11: Low-voltage during acceleration (LvA)

12: Low-voltage during deceleration (Lvd)

13: Low-voltage during constant speed (Lvn)

14: Low-voltage at stop (LvS)

15: Phase loss protection (OrP)

16: IGBT over-heat (oH1)

18: TH1 open: IGBT over-heat protection error (tH1o)

21: Drive over-load (oL)

22: Electronics thermal relay protection 1 (EoL1)

23: Electronics thermal relay protection 2 (EoL2)

24: Motor PTC overheat (oH3)

26: Over-torque 1 (ot1)

27: Over-torque 2 (ot2)

28: Low current (uC)

31: Memory read-out error (cF2)

33: U-phase current detection error (cd1)

34: V-phase current detection error (cd2)

35: W-phase current detection error (cd3)

36: Clamp current detection error (Hd0)

37: Over-current detection error (Hd1)

40: Auto tuning error (AUE)

41: PID feedback loss (AFE)

42: PG feedback error (PGF1)

43: PG feedback loss (PGF2)

44: PG feedback stall (PGF3)

45: PG slip error (PGF4)
48: Analog current input loss (ACE)
49: External fault input (EF)
50: Emergency stop (EF1)
51: External Base Block (bb)
52: Password error (Pcod)
54: Communication error (CE1)
55: Communication error (CE2)
56: Communication error (CE3)
57: Communication error (CE4)
58: Communication Time-out (CE10)
61: Y-connection / △-connection switch error (ydc)
62: Decel. Energy Backup Error (dEb)
63: Slip error (oSL)
72: Channel 1 (S1~DCM) safety loop error (STL1)
76: Safety torque off (STo)
77: Channel 2 (S2~DCM) safety loop error (STL2)
78: Internal loop error (STL3)
79: U phase Over current before run (Aoc)
80: V phase Over current before run (boc)
81: W phase Over current before run (coc)
82: U phase output phase loss (oPL1)
83: V phase output phase loss (oPL2)
84: W phase output phase loss (oPL3)
87: Drive over load in low frequency (oL3)
89: Initial rotor position detection error (roPd)
101: CANopen software disconnect 1 (CGdE)
102: CANopen software disconnect 2 (CHbE)
104: CANopen hardware disconnect (CbFE)
105: CANopen index setting error (CIdE)
106: CANopen station number setting error (CAdE)
107: CANopen memory error (CFrE)
121: Internal communication error (CP20)
123: Internal communication error (CP22)
124: Internal communication error (CP30)
126: Internal communication error (CP32)
127: Software version error (CP33)
128: Over-torque 3 (ot3)
129: Over-torque 4 (ot4)
134: Electronics thermal relay 3 protection (EoL3)
135: Electronics thermal relay 4 protection (EoL4)
140: GFF detected when power on (Hd6)

141: GFF occurs before run (b4GFF)
142: Auto tuning error 1 (DC test stage) (AUE1)
143: Auto tuning error 2 (High frequency test stage) (AUE2)
144: Auto tuning error 3 (Rotary test stage) (AUE3)

- As long as the fault is forced to stop, it will be recorded.
- Low voltage (Lv) when stopped (LvS warning, no record). Low voltage (Lv) when operation (LvA, Lvd, Lvn error, it will be recorded).
- When dEb function is effective and enable, drive will start the dEb function and also record the error code 62 to Pr. 06-17~06-22, Pr. 14-70~14-73 at same time.

14-74 Over-torque Detection Selection (Motor 3)
14-77 Over-torque Detection Selection (Motor 4)

Factory Setting: 0

Settings 0: No function
1: Continue operation after Over-torque detection during constant speed operation
2: Stop after Over-torque detection during constant speed operation
3: Continue operation after Over-torque detection during RUN
4: Stop after Over-torque detection during RUN

- When Pr. 14-74 and Pr. 14-77 setting are 1 or 3, there will have a warning message but no error record.
- When Pr. 14-74 and Pr.14-77 setting are 2 or 4, there will have an error message and error record.

14-75 Over-torque Detection Level (Motor 3)
14-78 Over-torque Detection Level (Motor 4)

Factory Setting: 120

Settings 10~250 % (100 % corresponds to the rated current of the drive)

14-76 Over-torque Detection Time (Motor 3)
14-79 Over-torque Detection Time (Motor 4)

Factory Setting: 0.1

Settings 0.0~60.0 sec.

- When the output current exceeds over-torque detection level (Pr. 14-75 / Pr.14-78) and over-torque detection time (Pr. 14-76 / Pr. 14-79), the over-torque detection will follow Pr. 14-74 or Pr. 14-77 setting.
- When Pr. 14-74 or Pr. 14-77 setting is 1 or 3, drive will display ot3 / ot4 warning when over-torque detection but drive is still continuous operation, until the output current is less than 5 % of over-torque detection, the warning message will be relieved.

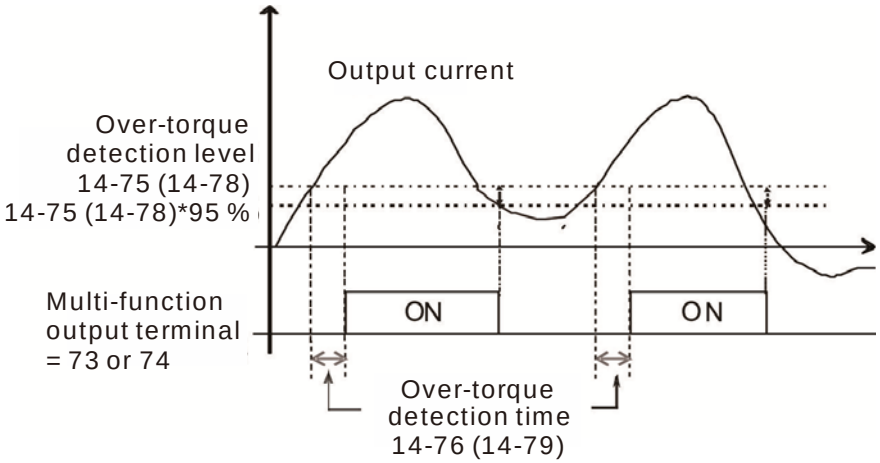

When Pr. 14-74 or Pr. 14-77 setting is 2 or 4, drive will display ot3 / ot4 error when over-torque detection and drive will stop operation, it will operate by manual reset.

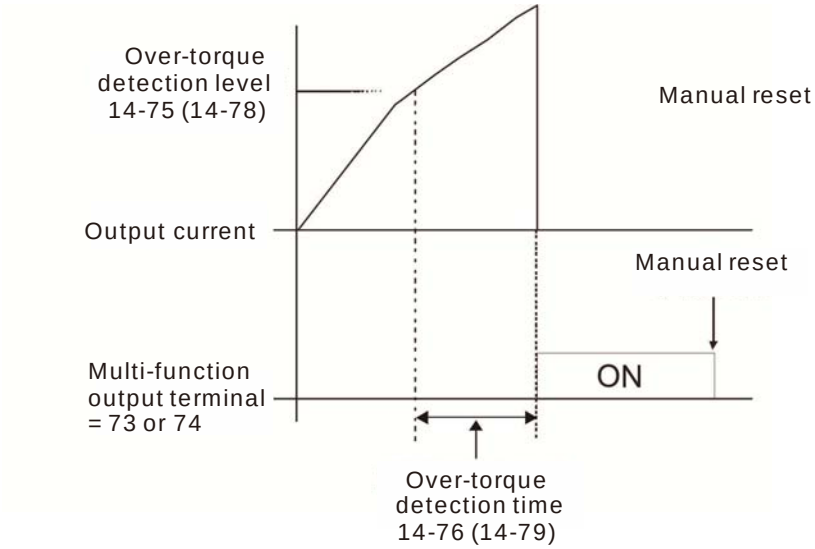

14-80 Electronic Thermal Relay Selection 3 (Motor 3)

14-82 Electronic Thermal Relay Selection 4 (Motor 4)

Factory Setting: 2

Settings 0: Inverter motor (with external forced cooling)
1: Standard motor (motor with fan on the shaft)
2: Disabled

In order to prevent the self-cooling motor occurs motor overheating during low speed operation, users can set the electronic thermal relay to limit the drive output power allowable.

The setting 0 is suitable for inverter motor (with external forced cooling). There is no obvious correlation between the heat dissipation capability and speed of motor, so the low speed electronic thermal relay is fixed, it can ensure that the load capacity of the motor at low speed.

The setting 1 is suitable for standard motor (motor with fan on the shaft). The cooling capacity of motor is poor at low speed, so the electronic thermal relay action time will be appropriate to reduce, it can ensure the life of the motor.

When power ON/OFF uses frequently, the thermal relay protection will be reset when power OFF, so even if the setting is 0 or 1, it may not be protected. If there are several motors connected to a drive, please install the electronic thermal relay in each of motors.

14-81 Electronic Thermal Relay Action Time 3 (Motor 3)
14-83 Electronic Thermal Relay Action Time 4 (Motor 4)

Factory Setting: 60.0

Settings 30.0~600.0 sec.

Electronic thermal relay is according to the motor 150 % rated current value and with Pr. 14-81 settings, the settings of Pr. 14-83 is to protect the motor to avoid burned due to motor overheating. When it reaches the setting time, the drive will display "EoL3 / EoL4", and the motor will be free run to stop.

This parameter function is based on the operating characteristic curve of electronic thermal relay I2t, it is according to the drive output frequency, current and running time to protect the motor and prevent the overheating of motor.

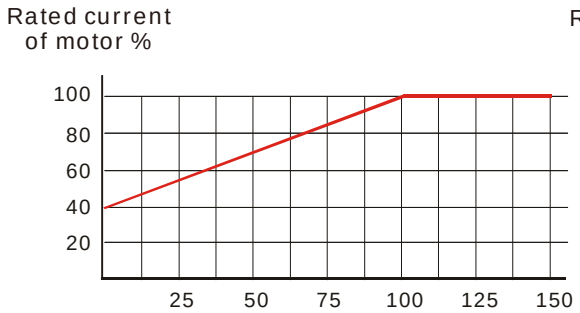

Motor coaxial cooling curve figure

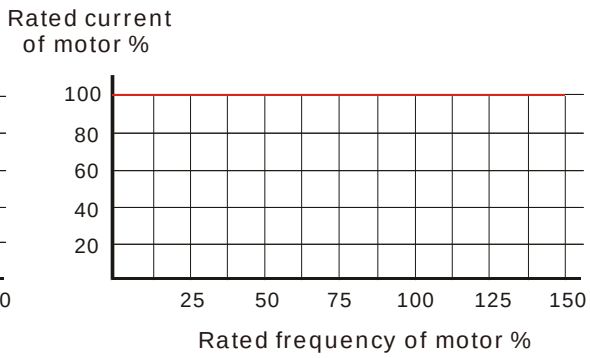

Motor independent cooling curve figure

The electronic thermal relay action condition should be follow the settings of Pr. 14-80 / Pr. 14-82:

1. Pr. 14-80 / Pr. 14-82 set to 0:Inverter motor (with external forced cooling):
   When drive output current is higher than the rated current 150 % of motor (please refer to the motor independent cooling curve figure as above), drive starts to accumulate time if the accumulation time exceeds the settings of Pr. 14-81 / Pr. 14-83, electronic thermal relay will be actuated.
2. Pr. 14-80 / Pr. 14-82 set to 1:Standard motor (motor with fan on the shaft)：
   When drive output current is higher than the rated current 150 % of motor (please refer to the motor coaxial cooling curve figure as above), drive starts to accumulate time if the accumulation time exceeds the settings of Pr. 14-81 / Pr. 14-83, electronic thermal relay will be actuated. The electronic thermal relay action time will depend on the drive output current (load rate of motor %) to make appropriate adjustments, the short action time when the current is high, the long action time when the current is low, please see the figure showing as below:

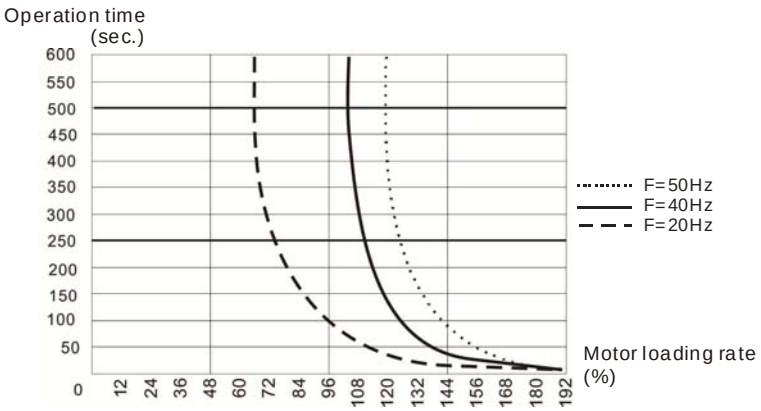

12-2 Adjustment & Application

Standard PM Motor Adjustment Procedure

- Pr. 00-11 = 2 SVC (Pr. 05-33 = 1 or 2)

Flow chart of adjustment when starting up WITHOUT load

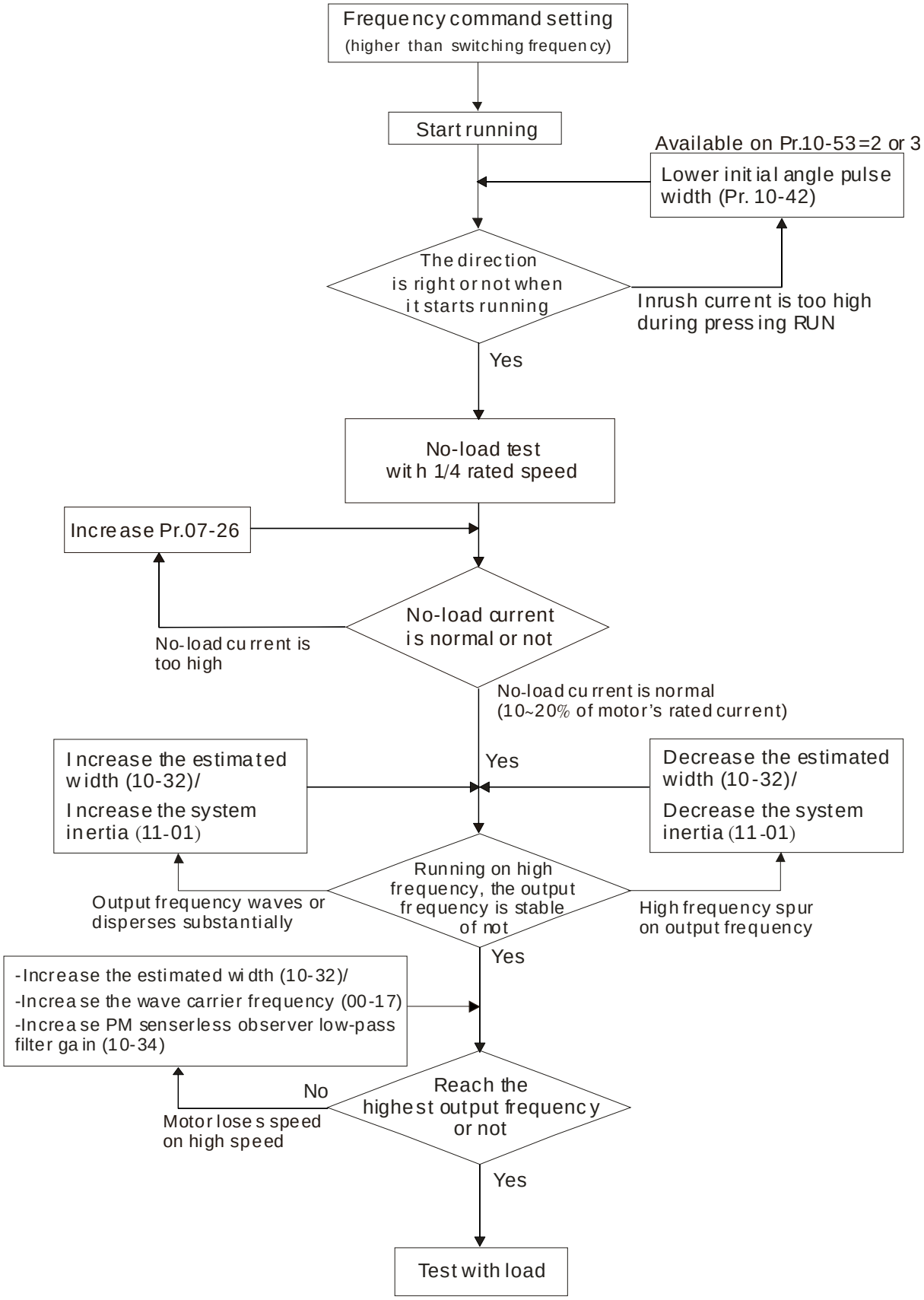

Flow chart of adjustment when starting up WITH load

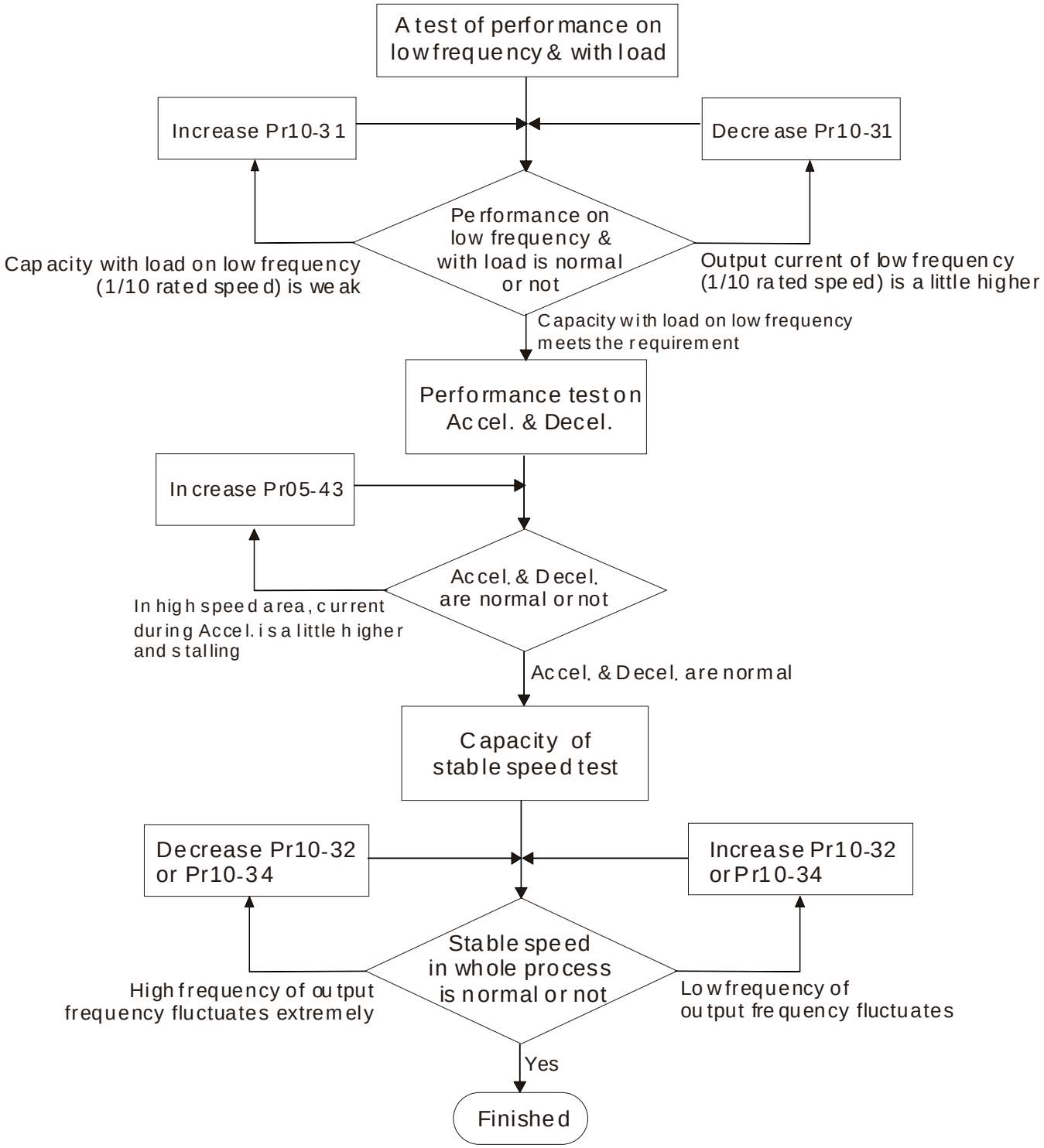

PMSVC control diagram

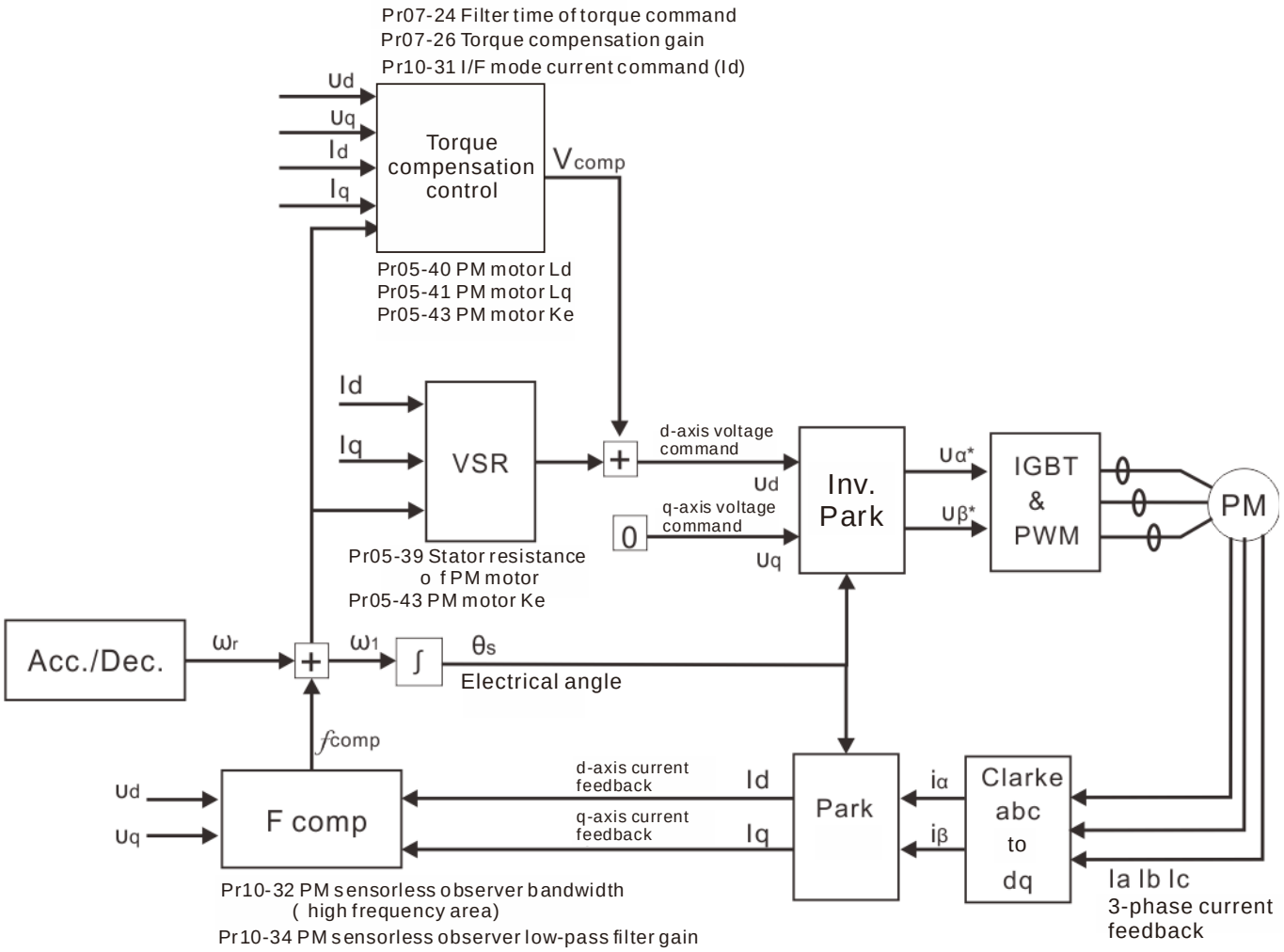

Adjustment procedure

1. Select PM motor control

   Pr. 05-33 =1 or 2

2. Set up motor parameter according to the nameplate on the motor

   Pr. 01-01 Rated frequency

   Pr. 01-02 Rated voltage

   Pr. 05-34 Rated current

   Pr. 05-35 Rated Power

   Pr. 05-36 Rated speed

   Pr. 05-37 Pole number of motor

3. Execute PM Auto-tuning (static)

   Set Pr. 05-00 =13 and press Run. When the tuning is done, the following parameters will be obtained.

   Pr. 05-39 Stator resistance

   Pr. 05-40 Permanent magnet motor Ld

   Pr. 05-41 Permanent magnet motor lq

   Pr. 05-43 (V / 1000 rpm), the Ke parameter of PM motor (this can be calculated automatically according to power, current and speed of motor).

   Pr. 10-52 The amplitude of the high frequency signal injected during angle detection

10-52 Injection Magnitude

Factory Setting: 15.0 / 30.0

Settings 0.0~200.0 V

- Increasing the parameter can get more accurate estimated value of angle. But the noise of electromagnetic might be louder if the setting value is too high.
- This parameter will be received when motor's parameter is "Auto". And this parameter will influence the accuracy of angel's estimation.
- When the ratio of salient pole (Lq / Ld) is lower, increase Pr. 10-52 to make angle detection be accurate.
- Pr. 10-52 is valid only when Pr. 10-53 = 2.

4. Set the speed control mode: Pr. 00-10 = 0, Pr. 00-11 = 2 SVC.
5. It is suggested that cutting off the power after finishing tuning, and then re-power on.
6. The ration of PMSVC control mode is 1:20.
7. When PMSVC control mode is under 1 / 20 rated speed, load bearing capacity = 100 % motor rated torque.
8. PMSVC control mode is not applicable for zero speed control.
9. Start-up with load and forward / reverse load bearing capacity of PMSVC control mode = 100 % rated torque of motor.
10. Set up the speed estimators related parameters.

10-31 I/F Mode Current Command

Factory Setting: 40

Settings 0~150 % of motor's rated current

- The parameter is the current command of the drive in low-speed area (low-speed area: frequency command < Pr. 10-39). When it is stalling on heavy duty start-up or forward / reverse with load, adjust the parameter (increase). If inrush current is too high to cause oc stall, then decrease it.

10-32 PM FOC Sensorless Speed Estimator Bandwidth

Factory Setting: 5.00

Settings 0.00~600.00 Hz

- The parameter is speed estimator bandwidth. Adjust the parameter will influence the stability and the accuracy of speed for motor.
- If there is low frequency vibrates (the waveform is similar to sin wave) during the process, then increase the bandwidth. If there is high frequency vibrates (the waveform vibrates extremely and is like spur), then decrease the bandwidth.

10-34 PM Sensorless Speed Estimator Low-pass Filter Gain

Factory Setting: 1.00

Settings 0.00~655.35

- Adjust the parameter will influence the response speed of speed estimator.
- If there is low frequency vibrates (the waveform is similar to sin wave) during the process, then increase the gain. If there is high frequency vibrates (the waveform vibrates extremely and is like spur), then decrease the gain.

10-39 Frequency Point when Switch from I/F Mode to PM Sensorless Mode

Factory Setting: 20.00

Settings 0.00~599.00 Hz

- The parameter is the switch point which is from low frequency to high frequency. It will influence the switch point of speed observer in high / low frequency area.
- If the switch point is too low, motor will generate not enough back emf to let the speed estimator measure the right rotator's position and speed, and cause stall and oc when the frequency of switch point is running.
- If the switch point is too high, the active area of I/F will be too wide, which will generate larger current and cannot save energy. (The reason is that if the current of Pr. 10-31 sets too high, and the high switch point will make the drive keeps outputting with the setting value of Pr. 10-31)

10-42 Initial Angle Detection Pulse Value

Factory Setting: 1.0

Settings 0.0~3.0

- The angle detection is fixed to 3: Use the pulse injection method to start. The parameter influences the value of pulse during the angle detection. The larger the pulse is, the higher of the accuracy of rotator's position. But larger pulse might cause oc easily.
- Increase the parameter when the running direction and the command are opposite while start-up. If oc occurs in the start-up moment, then decrease the parameter.
- Please refer to Chapter 12-2 Adjustment & Application for detailed motor adjustment procedure.

10-49 Zero Voltage Time While Start Up

Factory Setting: 00.000

Settings 00.000~60.000 sec.

- This parameter is valid only when the setting of Pr. 07-12 (Speed tracking during start-up) = 0.
- When the motor is in static status at the startup, the accuracy to estimate angles will be increased. In order to make the motor in "static status", 3 phase of drive output 0V to motor to reach this goal. The Pr. 10-49 setting time is the length of time when 3 phase output 0V.
- It is possible that even when this parameter is being applied but the motor at the installation site cannot go in to the "static status" caused by the inertia or by any external force. So, if the motor doesn't go into a completer "static status" in 0.2 sec, increase this setting value appropriately.
- If Pr. 10-49 sets too high, the start-up time will be longer obviously. If is too low, then the braking performance will be weak.

10-51 Injection Frequency

Factory Setting: 500

Settings 0~1200 Hz

- This parameter is a high frequency injection command in PM SVC control mode and it doesn't often need to be adjusted. But, if a motor's rated frequency (i.e. 400 Hz) is too close to the frequency setting of this parameter (i.e. factory setting 500 Hz), the accuracy of angles detected will be affected. Therefore, refer to the setting of Pr. 01-01 before adjusting this parameter.
- If the setting value of Pr. 00-17 is lower than Pr. 10-51*10, then increase the frequency of carrier wave.
- Pr. 10-51 is valid only when Pr. 10-53 = 2.

10-52 Injection Magnitude

Factory Setting: 15.0 / 30.0

Settings 0.0~200.0 V

- The parameter is magnitude command of high frequency injection signal in PM SVC control mode.
- Increasing the parameter can get more accurate estimated value of angle. But the noise of electromagnetic might be louder if the setting value is too high.
- This parameter will be received when motor's parameter is "Auto". And this parameter will influence the accuracy of angel's estimation.
- When the ratio of salient pole (Lq / Ld) is lower, increase Pr. 10-52 to make angle detection be accurate.
- Pr. 10-52 is valid only when Pr. 10-53 = 2.

10-53 Position Detection Method

Factory Setting: 0

Settings 0: Disabled
1: Internal 1/4 rated current attracting the rotor to zero degrees
2: High frequency injection
3: Pulse injection

- It is suggested to set as "2" if it's IPM; set as "3" if it's SPM. If there is bad effect when set as "2" or "3", then set as "1".

11. Parameters for speed adjustment

07-26 Torque Compensation Gain

Factory Setting: 1

Settings IM: 0~10 (when Pr. 05-33 = 0)
PM: 0~5000 (when Pr. 05-33 = 1 or 2)

- The parameter influences the output current during operation. There will be less effect on low speed area.
- Increase the setting value if the current with no-load is too high. However, it might also cause the motor to vibrate. If the motor vibrates during operation, decrease the setting value.

[This page intentionally left blank]

Chapter 13 Warning Codes

Model name of digital keypad: KPMS-LE01

ID No.	Display	Descriptions
1	CE1	Modbus function code error (Illegal function code) Corrective Actions ■ Check if the function code is correct. (Function code must be 03, 06, 10, 63)
2	CE2	Modbus data address is error (Illegal data address (00 H to 254 H) Corrective Actions ■ Check if the communication address is correct.
3	CE3	Modbus data error (Illegal data value) Corrective Actions ■ Check if the data value exceeds max. / min. value.
4	CE4	Modbus communication error (Data is written to read-only address) Corrective Actions ■ Check if the communication address is correct.
5	CE10	Modbus transmission time-out
6	CP10	Keypad transmission time-out
7	SE1	Keypad COPY error 1 Keypad simulation error, including communication delays, communication error (keypad received error FF86) and parameter value error.
8	SE2	Keypad COPY error 2 Keypad simulation done, parameter writes error.

ID No.	Display	Descriptions
9	oH1	IGBT is over-heated than protection level 1~10 HP: 90 ^{o}C Corrective Actions ■ Ensure that the ambient temperature falls within the specified temperature range. ■ Make sure that the ventilation holes are not obstructed. ■ Remove any foreign objects from the heat sink and check for possible dirty in heat sink. ■ Check the fan and clean it. ■ Provide enough spacing for adequate ventilation.
11	PCd	PID feedback loss
12	AnL	ACI signal loss When Pr. 03-19 is set to 1 or 2.
13	uC	Low current
15	PGFb	PG feedback error
16	PGL	PG feedback loss
17	oSPd	Over-speed warning
18	dAuE	Over speed deviation warning
20	ot1	When the output current exceeds the over-torque detection level (Pr. 06-07 or Pr. 06-10) and also exceeds Pr. 06-08 or Pr. 06-11, when Pr. 06-06 or Pr. 06-09 is set as 1 or 3, it will display warning without abnormal record; when Pr. 06-06 or 06-09 is set as 2 or 4, it will display error, stop running and there will be an abnormal record. Corrective Actions ■ Check if motor is overloaded. ■ Check Pr. 05-01 motor rated current is correct or not. ■ Increase motor capacity.
21	ot2	
22	oH3	Motor over-heating
24	oSL	Over slip
25	tUn	Auto tuning processing

ID No.	Display	Descriptions
28	oPHL	Output phase loss
30	SE3	Keypad COPY error 3 Keypad copy between different power range drive
31	ot3	Over torque warning of motor 3
32	ot4	Over torque warning of motor 4
36	CGdn	CANopen guarding time-out 1
37	CHbn	CANopen heartbeat time-out 2
39	CbFn	CANopen bus off
40	CIdn	CANopen index error
41	CAdn	CANopen station address error
42	CFrn	CANopen memory error
43	CSdn	CANopen SDO transmission time-out
44	CSbn	CANopen SDO received register overflow
45	Cbtn	CANopen boot up fault
46	CPtn	CANopen protocol format error
50	PLod	PLC download error, opposite data defect
51	PLSu	PLC download and save error
52	PLdA	Data error during PLC operation
53	PLFn	PLC download Function code error
54	PLor	PLC register overflow
55	PLFF	PLC operation Function code error

ID No.	Display	Descriptions
56	PLSn	PLC checksum error
57	PLEd	PLC end command is missing
58	PLCr	PLC MCR command error
59	PLdF	PLC download fail
60	PLSF	PLC scan time fail
73	ECbF	Bus-off detected
74	ECnP	No network power
75	ECFF	Factory default setting error
76	ECIF	Serious internal error
78	ECPP	Profibus parameter data error
79	ECPI	Profibus configuration data error
80	ECEF	Ethernet link fail
81	ECto	Communication time-out for communication card and drive
82	ECCS	Check sum error for communication card and drive
83	ECrF	Communication card returns to default setting
84	ECo0	Modbus TCP exceed maximum communication value
85	ECo1	EtherNet/IP exceed maximum communication value
86	ECIP	IP fail
87	EC3F	Mail fail
88	ECbY	Communication card busy

ID No.	Display	Descriptions
90	CPLP	Copy PLC: password error
91	CPL0	Copy PLC: read mode error
92	CPL1	Copy PLC: write mode error
93	CPLv	Copy PLC: version error
94	CPLS	Copy PLC: capacity size error
95	CPLF	Copy PLC: must disable PLC function
96	CPLt	Copy PLC: time out

[This page intentionally left blank]

Chapter 14 Error Codes

Model name of digital keypad: KPMS-LE01

*Follow the settings of Pr. 06-17 ~ Pr. 06-22 and Pr. 14-70 ~ Pr. 14-73

ID No.	Display	Descriptions
1	ocA	Over-current during acceleration (Output current exceeds triple rated current during acceleration.) Corrective Actions ■ Short-circuit at motor output: Check for possible poor insulation at the output. ■ Acceleration time too short: Increase acceleration time. ■ AC motor drive output power is too small: Replace the AC motor drive with higher power model.
2	ocd	Over-current during deceleration (Output current exceeds triple rated current during deceleration.) Corrective Actions ■ Short-circuit at motor output: Check for possible poor insulation at the output. ■ Acceleration time too short: Increase acceleration time. ■ AC motor drive output power is too small: Replace the AC motor drive with higher power model.
3	ocn	Over-current during steady state operation (Output current exceeds triple rated current during constant speed.) Corrective Actions ■ Short-circuit at motor output: Check for possible poor insulation at the output. ■ Acceleration time too short: Increase acceleration time. ■ AC motor drive output power is too small: Replace the AC motor drive with higher power model.

ID No.	Display	Descriptions
4	GFF	When (one of) the output terminal(s) is grounded, short circuit current is more than 50 % of AC motor drive rated current, the AC motor drive power module may be damaged. NOTE: The short circuit protection is provided for AC motor drive protection, not for protecting the user. Corrective Actions ■ Check the wiring connections between the AC motor drive and motor for possible short circuits, also to ground. ■ Check whether the IGBT power module is damaged. ■ Check for possible poor insulation at the output.
6	ocS	Over-current during stop. Hardware failure in current detection. Corrective Actions ■ Return to the factory.
7	ouA	DC BUS over-voltage at constant speed (230V: 450 Vdc; 460 V: 900 Vdc) Corrective Actions ■ Check if the input voltage spike without the rated AC motor drive input voltage range. ■ Check for possible voltage transients. ■ If DC BUS over-voltage due to regenerative voltage, please increase the acceleration time or add an optional brake resistor.
8	oud	DC BUS over-voltage during deceleration (230V: 450 Vdc; 460V: 900 Vdc) Corrective Actions ■ Check if the input voltage spike without the rated AC motor drive input voltage range. ■ Check for possible voltage transients. ■ If DC BUS is over-voltage due to regenerative voltage, please increase the deceleration time or add an optional brake resistor.
9	oun	DC BUS over-voltage at constant speed (230V: 450 Vdc; 460V: 900 Vdc) Corrective Actions ■ Check if the input voltage spike without the rated AC motor drive input voltage range. ■ Check for possible voltage transients. ■ If DC BUS is over-voltage due to regenerative voltage, please increase the deceleration time or add an optional brake resistor.
10	ouS	DC BUS over-voltage at stop. Hardware failure in voltage detection. Corrective Actions ■ Check if the input voltage spike without the rated AC motor drive input voltage range. ■ Check for possible voltage transients.

ID No.	Display	Descriptions
11	LuA	DC BUS voltage is less than Pr. 06-00 during acceleration. Corrective Actions ■ Check if the input voltage is normal. ■ Check for possible sudden load. ■ Check the setting of Pr. 06-00.
12	Lud	DC BUS voltage is less than Pr. 06-00 during deceleration. Corrective Actions ■ Check if the input voltage is normal. ■ Check for possible sudden load. ■ Check the setting of Pr. 06-00.
13	Lun	DC BUS voltage is less than Pr. 06-00 in constant speed. Corrective Actions ■ Check if the input voltage is normal. ■ Check for possible sudden load. ■ Check the setting of Pr. 06-00.
14	LuS	DC BUS voltage is less than Pr. 06-00 at stop. Corrective Actions ■ Check if the input voltage is normal. ■ Check for possible sudden load. ■ Check the setting of Pr. 06-00.
15	orP	Phase Loss. Corrective Actions ■ Check if there is any phase loss in 3-phase model or in 1-phase input application.
16	oH1	IGBT is over-heated than protection level. Corrective Actions ■ Ensure that the ambient temperature falls within the specified temperature range. ■ Make sure that the ventilation holes are not obstructed. ■ Remove any foreign objects from the heat sink and check for possible dirty in heat sink. ■ Check the fan and clean it. ■ Provide enough spacing for adequate ventilation.
18	tH1o	IGBT Hardware Error. Corrective Actions ■ Return to the factory.
21	oL	Overload. The AC motor drive detects excessive drive output current. Corrective Actions ■ Check if the motor is overloaded. ■ Take the next higher power AC motor drive model.

ID No.	Display	Descriptions
22	EoL 1	Electronics thermal relay 1 protection. Corrective Actions ■ Check the setting of electronics thermal relay (Pr. 06-14) ■ Take the next higher power AC motor drive model.
23	EoL 2	Electronics thermal relay 2 protection. Corrective Actions ■ Check the setting of electronics thermal relay (Pr. 06-28) ■ Take the next higher power AC motor drive model.
24	oH3	Motor overheating. The AC motor drive detecting internal temperature exceeds the setting of Pr. 06-30 (PTC level) Corrective Actions ■ Make sure that the motor is not obstructed. ■ Ensure that the ambient temperature falls within the specified temperature range. ■ Change to a higher power motor.
26	ot 1	When the output current exceeds the over-torque detection level (Pr. 06-07 or Pr. 06-10) and also exceeds Pr. 06-08 or Pr. 06-11, when Pr. 06-06 or Pr. 06-09 is set as 1 or 3, it will display warning without abnormal record; when Pr. 06-06 or 06-09 is set as 2 or 4, it will display error, stop running and there will be an abnormal record. Corrective Actions ■ Check if motor is overloaded. ■ Check Pr. 05-01 motor rated current is correct or not. ■ Increase motor capacity.
27	ot2	
28	uC	Low current detection. Corrective Actions ■ Check Pr. 06-71, Pr. 06-72, Pr. 06-73.
31	cF2	Internal EEPROM can not be read. Corrective Actions ■ Press “RESET” key to the factory setting. ■ Return to the factory if it invalid.
33	cd1	U-phase current error. Corrective Actions ■ Reboots the power. ■ If fault code is still displayed on the keypad please return to the factory.
34	cd2	V-phase current error. Corrective Actions ■ Reboots the power. ■ If fault code is still displayed on the keypad please return to the factory.

ID No.	Display	Descriptions
35	cd3	W-phase current error. Corrective Actions ■ Reboots the power. ■ If fault code is still displayed on the keypad please return to the factory
36	Hd0	CC (current clamp) hardware error. Corrective Actions ■ Reboots the power. ■ If fault code is still displayed on the keypad please return to the factory.
37	Hd1	OC hardware error. Corrective Actions ■ Reboots the power. ■ If fault code is still displayed on the keypad please return to the factory.
40	AUE	Motor parameters auto tuning error. Corrective Actions ■ Check if motor wiring is correct or not. ■ Check if motor capacity and parameters are correct or not. ■ Try again.
41	AFE	PID loss (ACI). Corrective Actions ■ Check the wiring of the PID feedback. ■ Check the setting of the PID parameters.
42	PGF1	PG feedback error. Corrective Actions ■ Check if the setting of encoder parameter is correct when drive is in PG feedback close-loop control.
43	PGF2	PG feedback loss. Corrective Actions ■ Check the wiring of the PG feedback.
44	PGF3	PG feedback stall. Corrective Actions ■ Check the wiring of the PG feedback. ■ Check if the setting of PI gain and acceleration or deceleration is suitable. ■ Return to the factory.
45	PGF4	PG slip error. Corrective Actions ■ Check the wiring of the PG feedback. ■ Check if the setting of PI gain and acceleration or deceleration is suitable. ■ Return to the factory.

ID No.	Display	Descriptions
48	ACE	ACI loss. Corrective Actions ■ Check the wiring of ACI. ■ Check if the ACI signal is less than 4 mA.
49	EF	External Fault. When the multi-function input terminal (EF) is active, the AC motor drive will stop output. Corrective Actions ■ Press “RESET” key after fault has been cleared.
50	EF1	Emergency stop. When the multi-function input terminal (EF1) is active, the AC motor drive will stop output. Corrective Actions ■ Press RESET after fault has been cleared.
51	bb	External Base Block. When the multi-function input terminal (B.B) is active, the AC motor drive will stop output. Corrective Actions ■ Deactivate the external input terminal (B.B) to operate the AC motor drive again.
52	Pcod	Keypad is locked after enter wrong password three times. Corrective Actions ■ Refer to Pr. 00-07 and Pr. 00-08. ■ Turn the power ON after power OFF to re-enter the correct password.
54	CE1	Modbus function code error (Illegal function code) Corrective Actions ■ Check if the function code is correct (Function code must be 03, 06, 10, 63).
55	CE2	Modbus data address is error [Illegal data address (00 H to 254 H)] Corrective Actions ■ Check if the data address is correct.
56	CE3	Modbus data error (Illegal data value) Corrective Actions ■ Check if the data value exceeds max. / min. value.
57	CE4	Modbus communication error (Data is written to read-only address) Corrective Actions ■ Check if the communication address is correct.

ID No.	Display	Descriptions
58	CE 10	Modbus transmission time-out Corrective Actions ■ Check if the host controller transmits the communication command within setting time (Pr. 09-03). ■ Check the communication wiring and grounding. 90 degrees wiring layout or separation from main circuit is suggested to prevent interference. ■ Check the setting of Pr. 09-02 is the same as the host controller. ■ Check the status of communication cable or change new cable.
61	ydc	Y-connection / Δ-connection switch error Corrective Actions ■ Check the wiring of the Y-connection / Δ-connection. ■ Check the parameters settings.
62	dEb	When Pr. 07-13 is not set to 0 and momentary power off or power cut, it will display dEb during accel. / decel. stop. Corrective Actions ■ Set Pr. 07-13 to 0. ■ Check if input power is stable.
63	oSL	When motor slip exceeds Pr. 07-29 setting and exceeds Pr. 07-30 time setting, it will show the fault. Corrective Actions ■ Check if motor parameter is correct, please decrease the load if overload. ■ Check the settings of Pr. 07-29 and Pr. 07-30.
72	SrL1	S1~DCM internal hardware detect error Corrective Actions ■ Check wiring of S1 terminal. ■ Reset emergency switch (ON: activated) and re-power ■ Check the input voltage to maintain at least 11V. ■ Check the wiring of S1 and +24V terminal. ■ After make sure the wiring is correct, if STL1 fault still exists after re-power, please contact Delta.
76	Sro	Safety torque off function active Corrective Actions ■ Check wiring of S1 and S2 terminal. ■ Reset emergency switch (ON: activated) and re-power. ■ Check the input voltage to maintain at least 11V. ■ Check the wiring of S1/S2 and +24V terminal. ■ After make sure the wiring is correct, if STO fault still exists after re-power, please contact Delta.

ID No.	Display	Descriptions
77	SrL2	S2~DCM internal hardware detect error. Corrective Actions ■ Check wiring of S2 terminal. ■ Reset emergency switch (ON: activated) and re-power. ■ Check the input voltage to maintain at least 11V. ■ Check the wiring of S2 and +24V terminal. ■ After make sure the wiring is correct, if STL2 fault still exists after re-power, please contact Delta.
78	SrL3	S1~DCM & S2~DCM internal hardware detect error. Corrective Actions ■ After make sure the wiring is correct, if STL3 fault still exists after re-power, please contact Delta.
79	Aoc	U-phase short circuit
80	boc	V-phase short circuit
81	coc	W-phase short circuit
82	oPL1	Output phase loss 1 (Phase U) Output phase loss 2 (Phase V) Output phase loss 3 (Phase W) Corrective Actions ■ Check the motor internal wiring, change the motor if there is still error. ■ Check the cable status. ■ Choose three phases motor, and make sure the capacity of drive and motor match. ■ Check the cable of control board. ■ Check three phases current is balanced or not. If it is balanced and OPHL fault still exists, please return to the factory.
83	oPL2	
84	oPL3	
87	oL3	Over load protection at low frequency
89	roPd	Initial rotor position detection error. Corrective Actions ■ Verify if the UVW output cable are loss. ■ Verify if the motor internal coil is broken. ■ Verify if the drive UVW output are normal.

ID No.	Display	Descriptions
101	CGdE	CANopen guarding error. Corrective Actions ■ Increase guarding time (Index 100C). ■ Check the communication wiring and grounding. 90 degrees wiring layout or separation from main circuit is suggested to prevent interference. ■ Make sure the communication wiring is serial. ■ Use dedicated CANopen cable and install terminating resistor. ■ Check the status of communication cable or change new cable.
102	CHbE	CANopen heartbeat error. Corrective Actions ■ Increase Heart beat time (Index 1016). ■ Check the communication wiring and grounding. 90 degrees wiring layout or separation from main circuit is suggested to prevent interference. ■ Make sure the communication wiring is serial. ■ Use dedicated CANopen cable and install terminating resistor. ■ Check the status of communication cable or change new cable.
104	CbFE	CANopen bus off error. Corrective Actions ■ Re-install CANopen card. ■ Check the communication wiring and grounding. 90 degrees wiring layout or separation from main circuit is suggested to prevent interference. ■ Make sure the communication wiring is serial. ■ Use dedicated CANopen cable and install terminating resistor. ■ Check the status of communication cable or change new cable.
105	CIdE	CANopen index error. Corrective Actions ■ Reset CANopen index (Pr. 00-02 = 7).
106	CAdE	CANopen station address error. Corrective Actions ■ Disable CANopen (Pr. 09-36 = 0). ■ Reset CANopen setting (Pr. 00-02 = 7). ■ Reset the station address (Pr. 09-36).
107	CFrE	CANopen memory error. Corrective Actions ■ Disable CANopen (Pr. 09-36 = 0). ■ Reset CANopen setting (Pr. 00-02 = 7). ■ Reset the station address (Pr. 09-36).
121	CP20	Internal communication error. Corrective Actions ■ If the fault still appears after reset, please return to the factory.

ID No.	Display	Descriptions
123	CP22	Internal communication error. Corrective Actions ■ If the fault still appears after reset, please return to the factory.
124	CP30	Internal communication error. Corrective Actions If the fault still appears after reset, please return to the factory.
126	CP32	Internal communication error. Corrective Actions ■ If the fault still appears after reset, please return to the factory.
127	CP33	Software version error
128	ot3	Over torque fault 3
129	ot4	Over torque fault 4
134	EoL3	Electronics thermal relay 3 protection
135	EoL4	Electronics thermal relay 4 protection
140	Hd6	GFF detected when power on
141	b4GFF	GFF occurs before run
142	AuE1	Auto tune error 1 (In DC test stage)
143	AuE2	Auto tune error 2 (High frequency test stage)
144	AuE3	Auto tune error 3 (Rotary test stage)

Chapter 15 CANopen Overview

15-1 CANopen Overview

15-2 Wiring for CANopen

15-3 CANopen Communication Interface Description

15-4 CANopen Supporting Index

15-5 CANopen Fault Codes

15-6 CANopen LED Function

The built-in CANopen function is a kind of remote control. Master can control the AC motor drive by using CANopen protocol. CANopen is a CAN-based higher layer protocol. It provides standardized communication objects, including real-time data (Process Data Objects, PDO), configuration data (Service Data Objects, SDO), and special functions (Time Stamp, Sync message, and Emergency message). And it also has network management data, including Boot-up message, NMT message, and Error Control message. Refer to CiA website http://www.can-cia.org/ for details. The content of this instruction sheet may be revised without prior notice. Please consult our distributors or download the most updated version at http://www.delta.com.tw/industrialautomation

Delta CANopen supporting functions:

- Support CAN2.0A Protocol
- Support CANopen DS301 V4.02
- Support DSP-402 V2.0

Delta CANopen supporting services:

- PDO (Process Data Objects): PDO1~ PDO4
- SDO (Service Data Object):
  Initiate SDO Download;
  Initiate SDO Upload;
  Abort SDO;
  SDO message can be used to configure the slave node and access the Object Dictionary in every node.
- SOP (Special Object Protocol):
  Support default COB-ID in Predefined Master/Slave Connection Set in DS301 V4.02;
  Support SYNC service;
  Support Emergency service.
- NMT (Network Management):
  Support NMT module control;
  Support NMT Error control;
  Support Boot-up.

Delta CANopen not supporting service:

- Time Stamp service

15-1 CANopen Overview

● CANopen Protocol

CANopen is a CAN-based higher layer protocol, and was designed for motion-oriented machine control networks, such as handling systems. Version 4.02 of CANopen (CiA DS301) is standardized as EN50325-4. The CANopen specifications cover application layer and communication profile (CiA DS301), as well as a framework for programmable devices (CiA 302), recommendations for cables and connectors (CiA 303-1) and SI units and prefix representations (CiA 303-2).

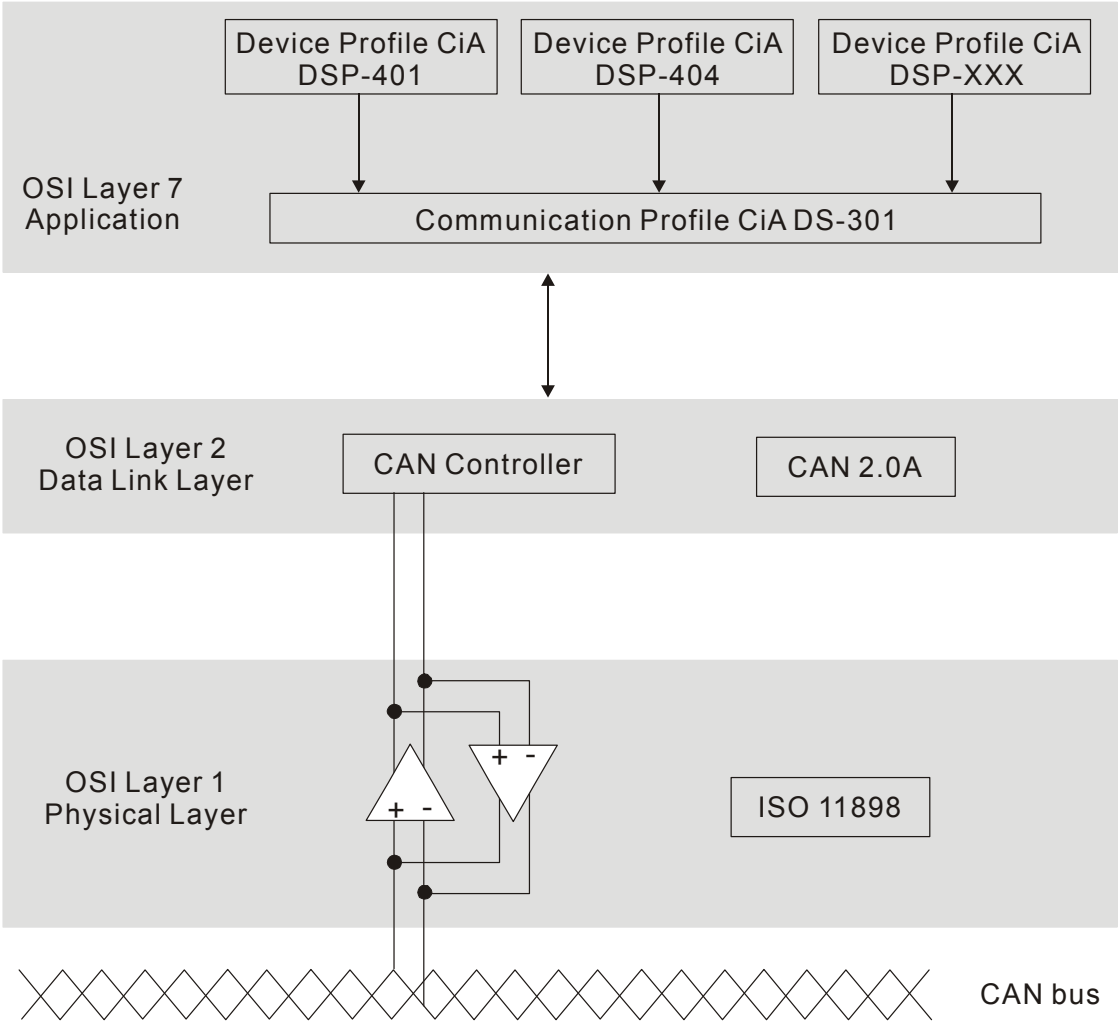

RJ-45 Pin Definition

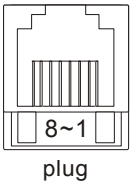

PIN	Signal	Description
1	CAN_H	CAN_H bus line (dominant high)
2	CAN_L	CAN_L bus line (dominant low)
3	CAN_GND	Ground / 0V /V-
6	CAN_GND	Ground / 0V /V-

● CANopen Communication Protocol

It has services as follows:

- NMT (Network Management Object)
- SDO (Service Data Objects)
- PDO (Process Data Object)
- EMCY (Emergency Object)

NMT (Network Management Object)

The Network Management (NMT) follows a Master/Slave structure for executing NMT service. Only one NMT master is in a network, and other nodes are regarded as slaves. All CANopen nodes have a present NMT state, and NMT master can control the state of the slave nodes. The state diagram of a node is shown as follows:

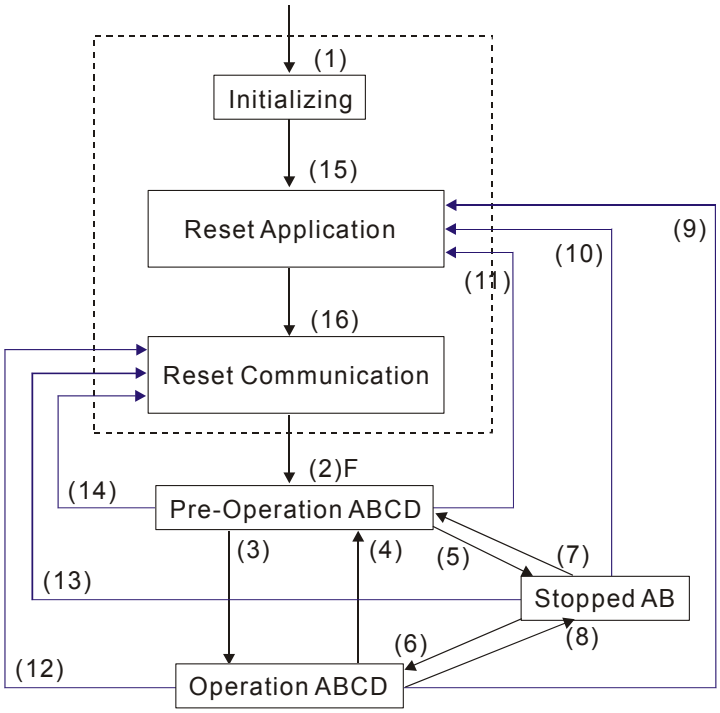

(1) After power is applied, it is auto in initialization state
(2) Enter pre-operational state automatically
(3) (6) Start remote node
(4) (7) Enter pre-operational state
(5) (8) Stop remote node
(9) (10) (11) Reset node
(12) (13) (14) Reset communication
(15) Enter reset application state automatically
(16) Enter reset communication state automatically

A: NMT
B: Node Guard
C: SDO
D: Emergency
E: PDO
F: Boot-up

	Initializing	Pre-Operational	Operational	Stopped
PDO			○	
SDO		○	○	
SYNC		○	○	
Time Stamp		○	○	
EMCY		○	○	
Boot-up	○			
NMT		○	○	○

SDO (Service Data Objects)

SDO is used to access the Object Dictionary in every CANopen node by Client/Server model. One SDO has two COB-ID (request SDO and response SDO) to upload or download data between two nodes. No data limit for SDOs to transfer data. But it needs to transfer by segment when data exceeds 4 bytes with an end signal in the last segment.

The Object Dictionary (OD) is a group of objects in CANopen node. Every node has an OD in the system, and OD contains all parameters describing the device and its network behavior. The access path of OD is the index and sub-index, each object has a unique index in OD, and has sub-index if necessary. The request and response frame structure of SDO communication is shown as follows:

PDO (Process Data Object)

PDO communication can be described by the producer/consumer model. Each node of the network will listen to the messages of the transmission node and distinguish if the message has to be processed or not after receiving the message. PDO can be transmitted from one device to one another device or to many other devices. Every PDO has two PDO services: a TxPDO and a RxPDO. PDOs are transmitted in a non-confirmed mode. All transmission types are listed in the following table:

Type Number	PDO				
	Cyclic	Acyclic	Synchronous	Asynchronous	RTR only
0		○	○		
1-240	○		○		
241-251	Reserved				
252			○		○
253				○	○
254				○	
255				○	

- Type number 1-240 indicates the number of SYNC message between two PDO transmissions.
- Type number 252 indicates the data is updated (but not sent) immediately after receiving SYNC.
- Type number 253 indicates the data is updated immediately after receiving RTR.
- Type number 254: Delta CANopen doesn’t support this transmission format.
- Type number 255 indicates the data is asynchronous transmission.

All PDO transmission data must be mapped to index via Object Dictionary.

EMCY (Emergency Object)

When errors occurred inside the hardware, an emergency object will be triggered an emergency object will only be sent when an error is occurred. As long as there is nothing wrong with the hardware, there will be no emergency object to be served as a warning of an error message.

15-2 Wiring for CANopen

An external adapter card: CMM-COP01 is used for CANopen wiring to connect CANopen to MS300. The link is enabled by using RJ45 cable. The two farthest ends must be terminated with 120Ω terminating resistors.

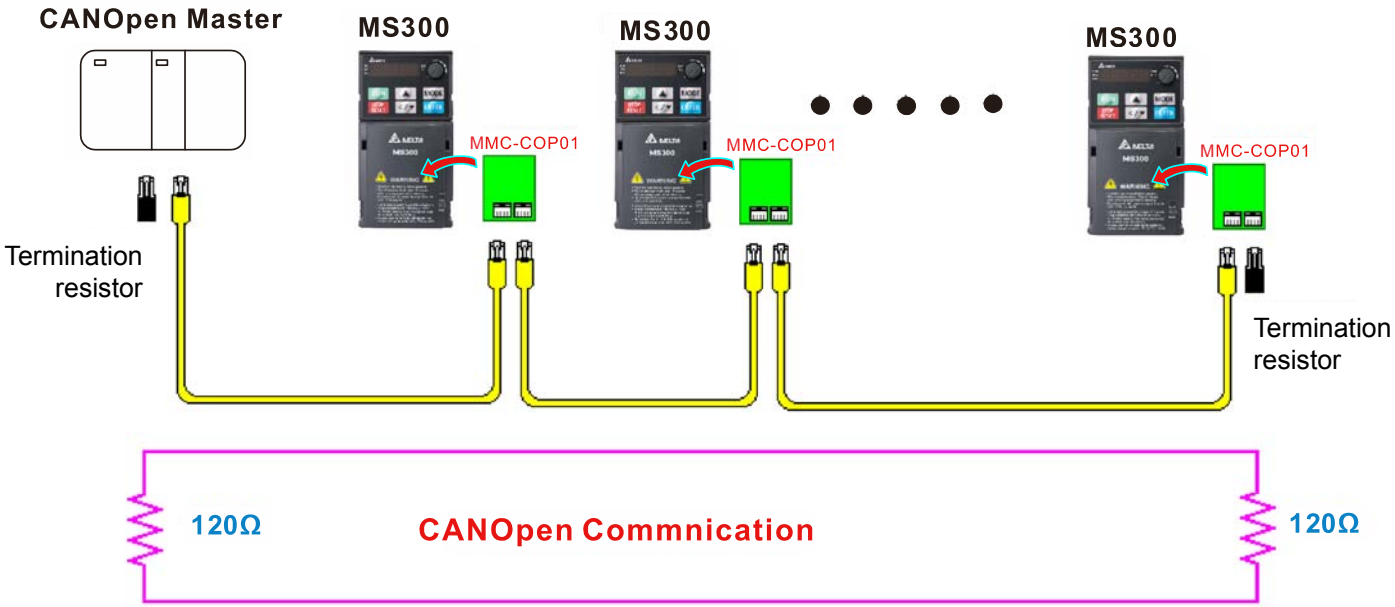

15-3 CANopen Communication Interface Descriptions

15-3-1 CANopen Control Mode Selection

There are two control modes for CANopen; Pr. 09-40 set to 1 is the factory setting mode DS402 standard and Pr.09-40 set to 0 is Delta's standard setting mode.

Actually, there are two control modes according to Delta's standard, one is the old control mode (Pr. 09-30=0).

This control mode can only control the motor drive under frequency control. Another mode is a new standard (Pr. 09-30=1)

This new control mode allows the motor drive to be controlled under all sorts of mode. Currently, C2000 support speed, torque, position and home mode.

The definition of relating control mode are:

CANopen control mode	Control mode	
	Speed	
	Index	Description
DS402 Pr. 09-40=1	6042-00	Target rotating speed (RPM)
	-----	-----
Delta Standard (Old definition) Pr. 09-40=0, Pr. 09-30=0	2020-02	Target rotating speed (Hz)
Delta Standard (New definition) Pr. 09-40=0, Pr. 09-30=1	2060-03	Target rotating speed (Hz)
	2060-04	Torque limit (%)

CANopen control mode	Operation control	
	Index	Description
DS402 Pr. 09-40=1	6040-00	Operation Command
	-----	-----
Delta Standard (Old definition) Pr. 09-40=0, Pr. 09-30=0	2020-01	Operation Command
Delta Standard (New definition) Pr. 09-40=0, Pr. 09-30=1	2060-01	Operation Command
	-----	-----

CANopen control mode	Other	
	Index	Description
DS402 Pr. 09-40=1	605A-00	Quick stop processing mode
	605C-00	Disable operation processing mode
Delta Standard (Old definition) Pr. 09-40=0, Pr. 09-30=0	-----	-----
Delta Standard (New definition) Pr. 09-40=0, Pr. 09-30=1	-----	-----
	-----	-----

However, you can use some index regardless DS402 or Delta's standard.

For example:

1. Index which are defined as RO attributes.
2. Index correspond to parameters such as (2000 ~200B-XX)
3. Accelerating/Decelerating Index: 604F 6050

15-3-2 DS402 Standard Control Mode

15-3-2-1 Related set up of ac motor drive (by following DS402 standard)

If you want to use DS402 standard to control the motor drive, please follow the steps below:

1. Wiring for hardware (refer to chapter 15-2 Wiring for CANopen)
2. Operation source setting: set Pr. 00-21 to 3 for CANopen communication card control.
3. Frequency source setting: set Pr. 00-20 to 6. (Choose source of frequency commend from CANopen setting.)
4. Source of torque setting is set by Pr.11-33. (Choose source of torque commend from CANopen setting.)
5. Set DS402 as control mode: Pr. 09-40=1
6. CANopen baud rate setting: set Pr. 09.37 (CANBUS Baud Rate: 1M(0), 500K(1), 250K(2), 125K(3), 100K(4) and50K(5))
7. Set multiple input functions to Quick Stop (it can also be enable or disable, default setting is disable). If it is necessary to enable the function, set MI terminal to 53 in one of the following parameter: Pr. 02-01 ~Pr. 02-08 or Pr. 02-26 ~ Pr. 02-31. (Note: This function is available in DS402 only.)

15-3-2-2 The status of the motor drive (by following DS402 standard)

According to the DS402 definition, the motor drive is divided into 3 blocks and 9 statuses as described below.

3 blocks

1. Power Disable: That means without PWM output
2. Power Enable: That means with PWM output
3. Fault: One or more than one error has occurred.

9 status

1. Start: Power On
2. Not ready to switch on: The motor drive is initiating.
3. Switch On Disable: When the motor drive finishes the initiation, it will be at this mode.
4. Ready to switch on: Warming up before running.
5. Switch On: The motor derive has the PWM output now, but the reference commend is not effective.
6. Operate Enable: Able to control normally.
7. Quick Stop Active: When there is a Quick Stop request, you have to stop running the motor drive.
8. Fault Reaction Active: The motor drive detects conditions which might trigger error(s).
9. Fault: One or more than errors has occurred to the motor drive.

Therefore, when the motor drive is turned on and finishes the initiation, it will remain at Ready to Switch on status. To control the operation of the motor drive, you need to change this status to Operate Enable status. The way to change it is to commend the control word's bit0 ~ bit3 and bit7 of the Index 6040H and to pair with Index Status Word (Status Word 0X6041). The control steps and index definition are described as below:

Index 6040

15~9	8	7	6~4	3	2	1	0
Reserved	Halt	Fault Reset	Operation	Enable operation	Quick Stop	Enable Voltage	Switch On

Index 6041

15~14	13~12	11	10	9	8	7	6	5	4	3	2	1	0
Reserved	Operation	Internal limit active	Target reached	Remote	Reserved	Warning	Switch on disabled	Quick stop	Voltage enabled	Fault	Operation enable	Switch on	Ready to switch on

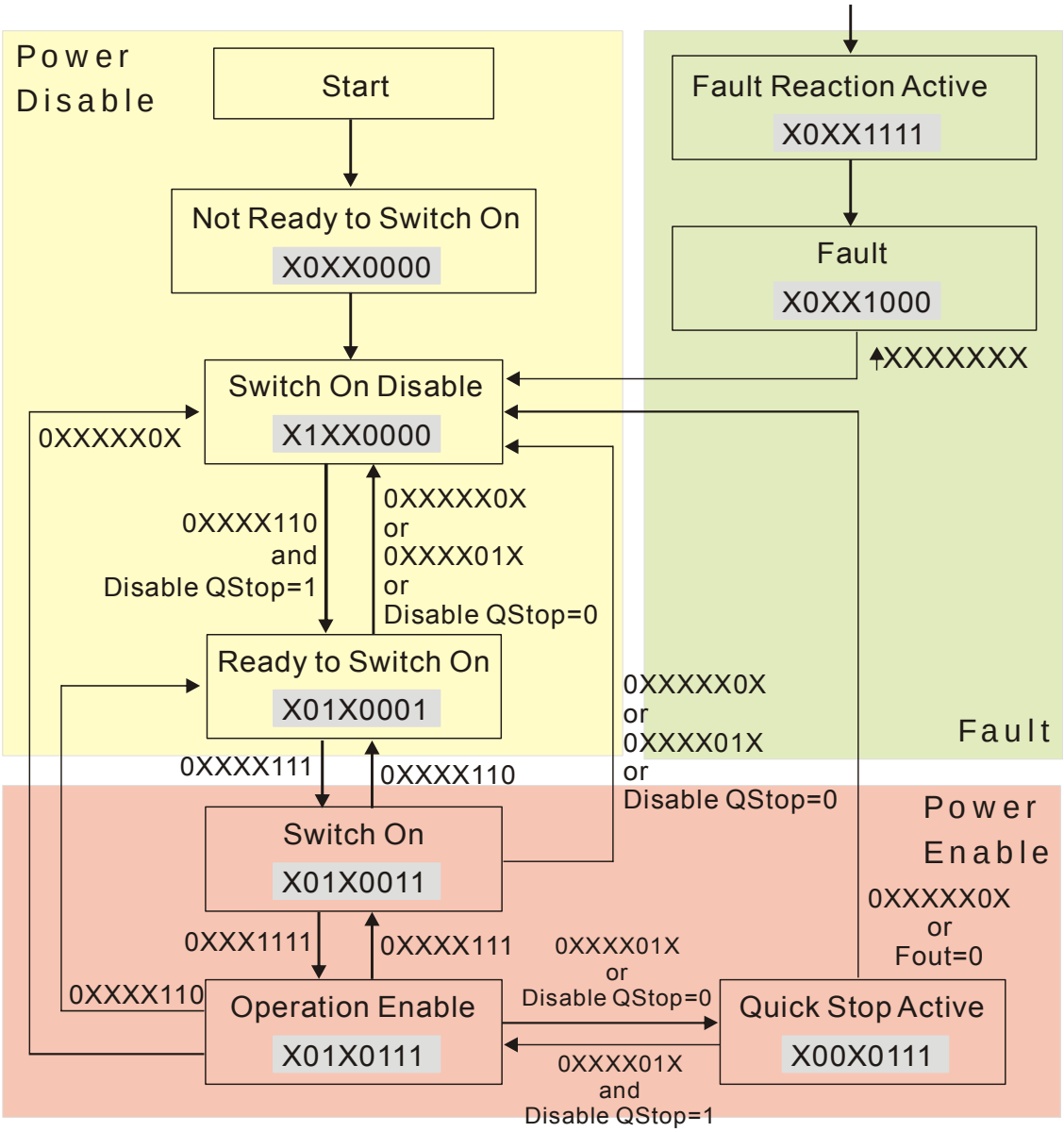

Set command 6040 =0xE, then set another command 6040 =0xF. Then the motor drive can be switched to Operation Enable. The Index 605A decides the dashed line of Operation Enable when the control mode changes from Quick Stop Active. (When the setting value is 1~3, this dashed line is active. But when the setting value of 605A is not 1~3, once he motor derive is switched to Quick Stop Active, it will not be able to switch back to Operation Enable.)

Index	Sub	Definition	Factory Setting	R/W	Size	Unit	PDO Map	Mode	note
605Ah	0	Quick stop option code	2	RW	S16		No		0 : disable drive function
									1 :slow down on slow down ramp
									2: slow down on quick stop ramp
									5 slow down on slow down ramp and stay in QUICK STOP
									6 slow down on quick stop ramp and stay in QUICK STOP
									7 slow down on the current limit and stay in Quick stop

Besides, when the control section switches from Power Enable to Power Disable, use 605C to define parking method.

Index	Sub	Definition	Factory Setting	R/W	Size	Unit	PDO Map	Mode	note
605Ch	0	Disable operation option code	1	RW	S16		No		0: Disable drive function 1: Slow down with slow down ramp; disable of the drive function

15-3-2-3 Various mode control method (by following DS402 standard)

Speed mode

1. Let Ac Motor Drive be at the speed control mode: Set Index6060 to 2.
2. Switch to Operation Enable mode: Set 6040=0xE, then set 6040 = 0xF.
3. To set target frequency: Set target frequency of 6042, since the operation unit of 6042 is rpm, there is a transformation:

$$n = f \times \frac{120}{p}$$

n: rotation speed (rpm) (rounds/minute) P: motor's pole number (Pole)

f: rotation frequency (Hz)

For example:

Set 6042H = 1500 (rpm), if the motor drive's pole number is 4 (Pr05-04 or Pr05-16), then the motor drive's operation frequency is 1500(120/4)=50Hz.

Besides, the 6042 is defined as a signed operation. The plus or minus sign means to rotate clockwise or counter clockwise

4. To set acceleration and deceleration: Use 604F(Acceleration) and 6050(Deceleration).
5. Trigger an ACK signal: In the speed control mode, the bit 6~4 of Index 6040 needs to be controlled. It is defined as below:

	Index 6040			SUM
	Bit 6	Bit 5	Bit 4	
Speed mode (Index 6060=2)	1	0	1	Locked at the current signal.
	1	1	1	Run to reach targeting signal.
	Other			Decelerate to 0Hz.

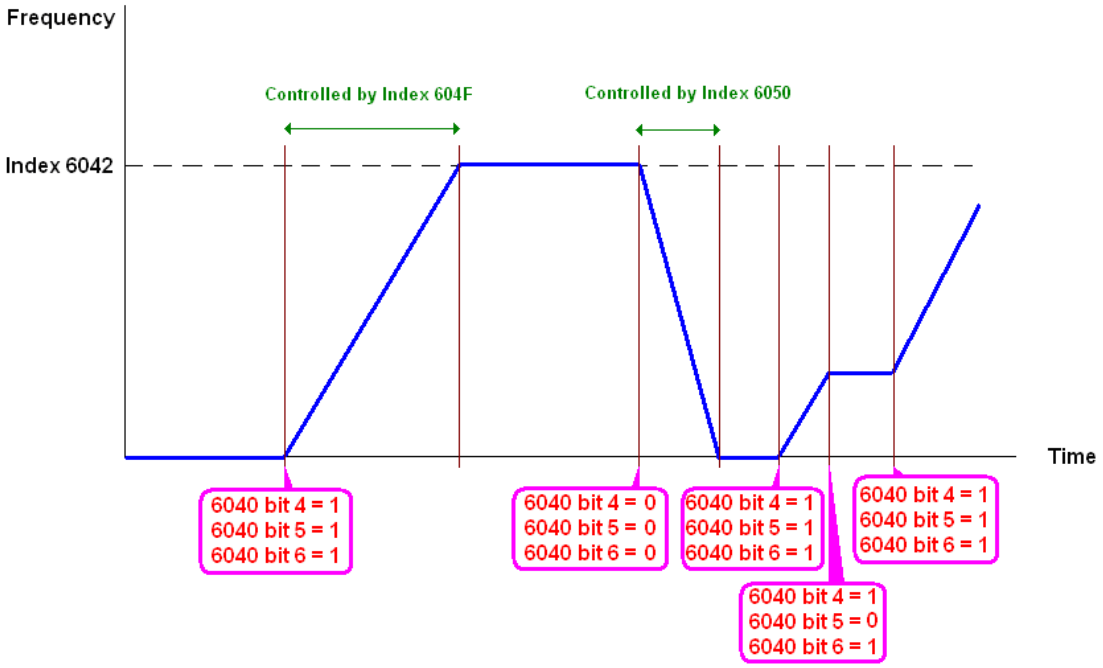

NOTE 01: To know the current rotation speed, read 6043. (unit: rpm)

NOTE 02: To know if the rotation speed can reach the targeting value; read bit 10 of 6041.

(0: Not reached; 1: Reached)

15-3-3 By using Delta Standard (Old definition, only support speed mode)

15-3-3-1 Various mode control method (Delta Old Standard)

Please follow the steps below:

1. Wiring for hardware (Refer to chapter 15.2 Wiring for CANopen)
2. Operation source setting: set Pr.00-21 to 3 for CANopen communication card control.
3. Frequency source setting: set Pr.00.20 to 6. (Choose source of frequency commend from CANopen setting.)
4. Set Delta Standard (Old definition, only support speed mode) as control mode: Pr. 09-40 = 0 and Pr. 09-30 = 0.
5. CANopen station setting: set Pr. 09-36 (Range of setting is 1~127. When Pr.09-36=0, CANopen slave function is disabled.) (Note: If error arised (CAdE or CANopen memory error) as station setting is completed, press Pr. 00-02=7 for reset.)
6. CANopen baud rate setting: set Pr. 09.37 (CANBUS Baud Rate: 1M(0), 500K(1), 250K(2), 125K(3), 100K(4) and50K(5))

15-3-3-2 By speed mode

1. Set the target frequency: Set 2020-02, the unit is Hz, with a number of 2 decimal places. For example 1000 is 10.00.
2. Operation control: Set 2020-01 = 0002H for Running, and set 2020-01 = 0001H for Stopping.

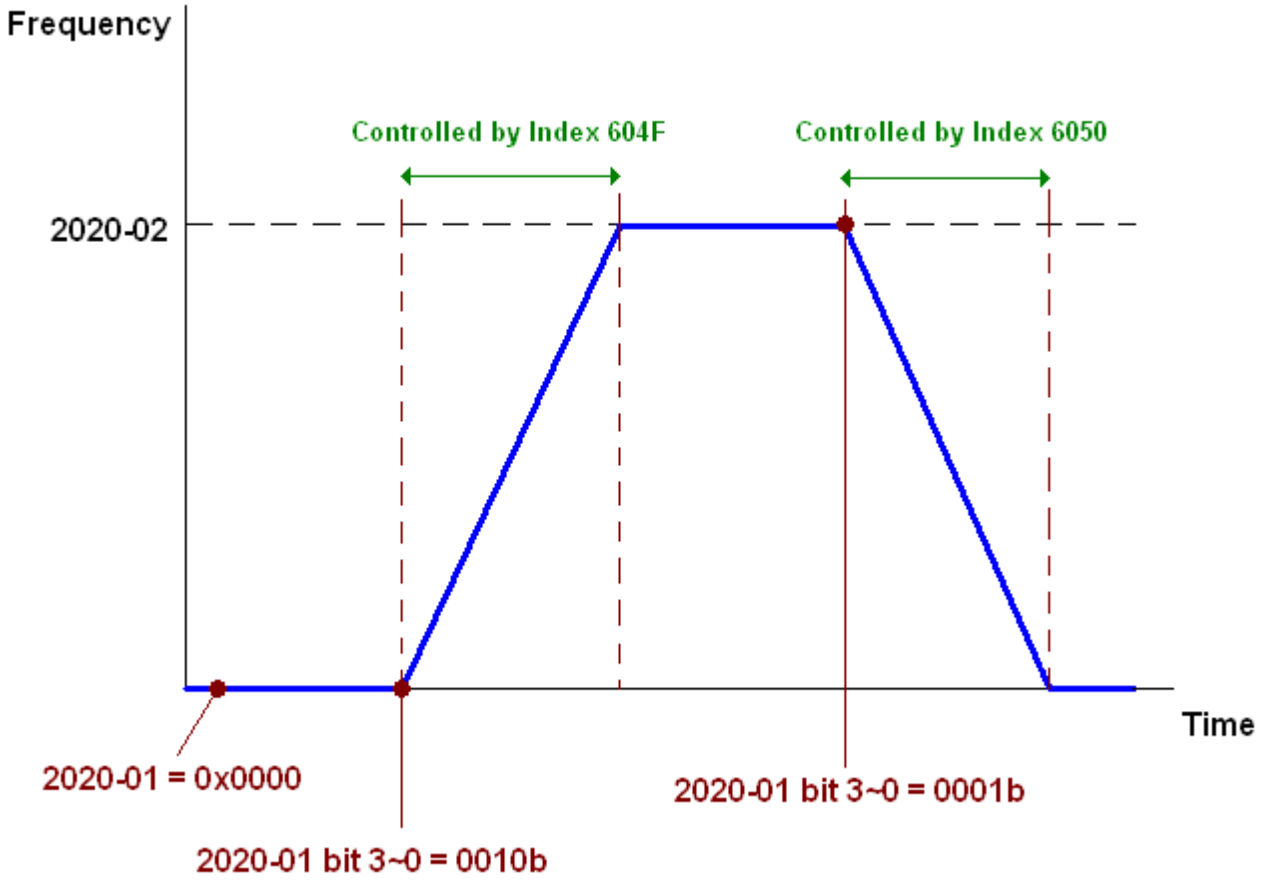

15-3-4 By using Delta Standard (New definition)

15-3-4-1 Related set up of ac motor drive (Delta New Standard)

Please follow the steps below:

1. Wiring for hardware (Refer to chapter 15.2 Wiring for CANopen)
2. Operation source setting: set Pr. 00-21 to 3 for CANopen communication card control.
3. Frequency source setting: set Pr. 00-20 to 6. (Choose source of frequency commend from CANopen setting.)
4. Set Delta Standard (New definition) as control mode: Pr. 09-40 = 0 and 09-30 = 1.
5. CANopen station setting: set Pr. 09-36 (Range of setting is 1~127. When Pr.09-36=0, CANopen slave function is disabled.) (Note: If error arised (CAdE or CANopen memory error) as station setting is completed, press Pr. 00-02=7 for reset.)
6. CANopen baud rate setting: set Pr. 09-37 (CANBUS Baud Rate: 1M(0), 500K(1), 250K(2), 125K(3), 100K(4) and50K(5))

15-3-4-2 Various mode control method (Delta New Standard)

Speed Mode

1. Let Ac Motor Drive be at the speed control mode: Set Index6060 = 2.
2. Set the target frequency: set 2060-03, unit is Hz, with a number of 2 decimal places. For example 1000 is 10.00Hz.
3. Operation control: set 2060-01 = 008H for Server on, and set 2060-01 = 0081H for Running.

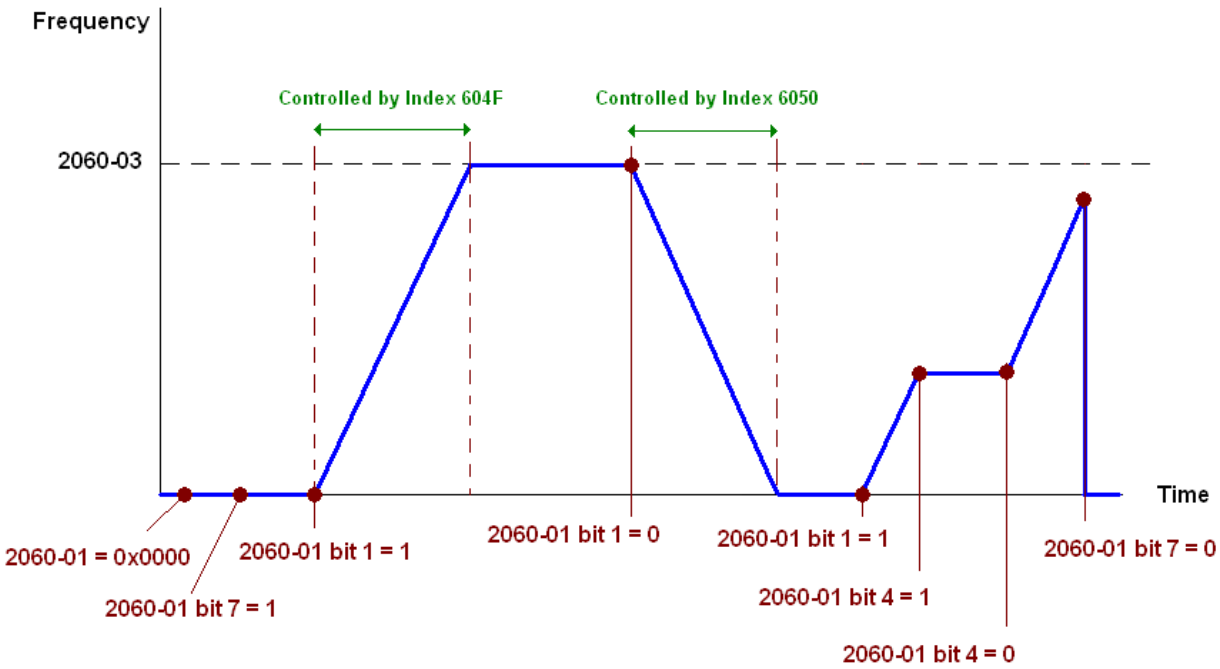

15-3-5 DI/DO AI AO are controlled via CANopen

To control the DO AO of the motor drive through CANopen, follow the steps below:

1. To set the DO to be controlled, define this DO to be controlled by CANopen. For example, set Pr. 02-13=50 to control RY1.
2. To set the AO to be controlled, define this AO to be controlled by CANopen. For example, set Pr. 03-20=20 to control AFM.
3. To control the mapping index of CANopen. If you want to control DO, then you will need to control Index2026-41. If you want to control AO, then you will need to control 2026-AX. If you want to set RY1 as ON, set the bit 1 of Index 2026-41 =1, then RY1 will output 1. If you want to control AFM output = 50.00%, then you will need to set Index 2026-A2 =5000, then AFM will output 50%.

Mapping table of CANopen DI DO AI AO:

DI:

Terminal	Related Parameters	R/W	Mapping Index
MI 1	==	RO	2026-01 bit 2
MI 2	==	RO	2026-01 bit 3
MI 3	==	RO	2026-01 bit 4
MI 4	==	RO	2026-01 bit 5
MI 5	==	RO	2026-01 bit 6
MI 6	==	RO	2026-01 bit 7
MI 7	==	RO	2026-01 bit 8

DO：

Terminal	Related Parameters	R/W	Mapping Index
RY	Pr. 02-13 = 50	RW	2026-41 bit 0
MO1	Pr. 02-16 = 50	RW	2026-41 bit 3
MO2	Pr. 02-17 = 50	RW	2026-41 bit 4

AI：

Terminal	Related Parameters	R/W	Mapping Index
AVI	==	RO	Value of 2026-61
ACI	==	RO	Value of 2026-62

AO：

Terminal	Related Parameters	R/W	Mapping Index
AFM	Pr. 03-20 = 20	RW	Value of 2026-A1

15-4 CANopen Supporting Index

MS300 Index:

Parameter index corresponds to each other as following:

Index	**sub-Index**
2000H + Group	member+1

For example:

Pr. 10-15 (Encoder Slip Error Treatment)

Group		**member**
10(0$\overline{A}$H)	-	15(0FH)

Index = 2000H + 0AH = 200A

Sub Index = 0FH + 1H = 10H

MS300 Control Index:

Delta Standard Mode (Old definition)

Index	Sub	Definition	Factory Setting	R/W	Size	Note	
2020H	0	Number	3	R	U8		
	1	Control word	0	RW	U16	Bit 1~0	00B:disable
							01B:stop
							10B:disable
							11B: JOG Enable
						Bit3~2	Reserved
						Bit5~4	00B:disable
							01B: Direction forward
							10B: Reverse
							11B: Switch Direction
						Bit7~6	00B: 1st step Accel. /Decel.
							01B: 2nd step Accel. /Decel.
							10B: 3rd step Accel. /Decel.
							11B: 4th step Accel. /Decel.
						Bit11~8	0000B: Master speed
							0001B: 1st step speed
							0010B: 2nd step speed
							0011B: 3rd step speed
							0100B: 4th step speed
							0101B: 5th step speed
							0110B: 6th step speed
							0111B: 7th step speed
							1000B: 8th step speed
							1001B: 9th step speed
							1010B: 10th step speed
							1011B: 11th step speed
							1100B: 12th step speed
							1101B: 13th step speed
							1110B: 14th step speed
							1111B: 15th step speed
						Bit12	1: Enable the function of Bit6-11
						Bit14~13	00B: no function
							01B: Operation command by the digital keypad

Index	Sub	Definition	Factory Setting	R/W	Size	Note	
							10B: Operation command by Pr. 00-21 setting
							11B: Switch the source of operation command
						Bit 15	Reserved
	2	Freq. command (XXX.XXHz)	0	RW	U16		
	3	Other trigger	0	RW	U16	Bit0	1: E.F. ON
						Bit1	1: Reset
						Bit15~2	Reserved
2021H	0	Number	DH	R	U8		
	1	Error code	0	R	U16		
	2	AC motor drive status	0	R	U16	Bit 1~0	00B: stop
							01B: decelerate to stop
							10B: waiting for operation command
							11B: in operation
						Bit 2	1: JOG command
						Bit 4~3	00B: forward running
							01B: switch from reverse running to forward running
							10B: switch from forward running to reverse running
							11B: reverse running
						Bit 7~5	Reserved
						Bit 8	1: master frequency command controlled by communication interface
						Bit 9	1: master frequency command controlled by analog signal input
						Bit 10	1: operation command controlled by communication interface
						Bit 15~11	Reserved
	3	Freq. command (XXX.XXHz)	0	R	U16		
	4	Output freq. (XXX.XXHz)	0	R	U16		
	5	Output current (XX.XA)	0	R	U16		
	6	DC bus voltage (XXX.XV)	0	R	U16		
	7	Output voltage (XXX.XV)	0	R	U16		
	8	the current segment run by the multi-segment speed commend	0	R	U16		
	9	Reserved	0	R	U16		
	A	Display counter value（c）	0	R	U16		
	B	Display output power angle (XX.X°)	0	R	U16		
	C	Display output torque (XXX.X%)	0	R	U16		
	D	Display actual motor speed (rpm)	0	R	U16		
	E	Number of PG feed back pulses (0~65535)	0	R	U16		
	F	Number of PG2 pulse commands (0~65535)	0	R	U16		
	10	power output (X.XXXKWH)	0	R	U16		
	17	Multi-function display (Pr.00-04)	0	R	U16		

Index	Sub	Definition	Factory Setting	R/W	Size	Note	
2022H	0	Reserved	0	R	U16		
	1	Display output current	0	R	U16		
	2	Display counter value	0	R	U16		
	3	Display actual output frequency (XXX.XXHz)	0	R	U16		
	4	Display DC-BUS voltage (XXX.XV)	0	R	U16		
	5	Display output voltage (XXX.XV)	0	R	U16		
	6	Display output power angle (XX.X°)	0	R	U16		
	7	Display output power in kW	0	R	U16		
	8	Display actual motor speed (rpm)	0	R	U16		
	9	Display estimate output torque (XXX.X%)	0	R	U16		
	A	Display PG feedback	0	R	U16		
	B	Display PID feedback value after enabling PID function in % (To 2 decimal places)	0	R	U16		
	C	Display signal of AVI analog input terminal, 0-10V corresponds to 0-100% (To 2 decimal places)	0	R	U16		
	D	Display signal of ACI analog input terminal, 4-V20mA/0-10V corresponds to 0-100% (To 2 decimal places)	0	R	U16		
	F	Display the IGBT temperature of drive power module in °C	0	R	U16		
	10	Display the temperature of capacitance in °C	0	R	U16		
	11	The status of digital input (ON/OFF), refer to Pr.02-12	0	R	U16		
	12	The status of digital output (ON/OFF), refer to Pr.02-18	0	R	U16		
	13	Display the multi-step speed that is executing	0	R	U16		
	14	The corresponding CPU pin status of digital input	0	R	U16		
	15	The corresponding CPU pin status of digital output	0	R	U16		
	16	Number of actual motor revolution (PG1 of PG card). it will start from 9 when the actual operation direction is changed or keypad display at stop is 0. Max. is 65535	0	R	U16		
	17	Pulse input frequency (PG2 of PG card)	0	R	U16		
	18	Pulse input position (PG card PG2), maximum setting is 65535.	0	R	U16		
	1A	Display times of counter overload (0.00~100.00%)	0	R	U16		
	1B	Display GFF in %	0	R	U16		
	1C	Display DCbus voltage ripples (Unit: Vdc)	0	R	U16		

Index	Sub	Definition	Factory Setting	R/W	Size	Note	
	1D	Display PLC register D1043 data	0	R	U16		
	1E	Display Pole of Permanent Magnet Motor	0	R	U16		
	1F	User page displays the value in physical measure	0	R	U16		
	20	Output Value of Pr.00-05	0	R	U16		
	21	Number of motor turns when drive operates	0	R	U16		
	22	Operation position of motor	0	R	U16		
	23	Fan speed of the drive	0	R	U16		
	24	Control mode of the drive 0: speed mode 1: torque mode	0	R	U16		
	25	Carrier frequency of the drive	0	R	U16		

CANopen Remote IO mapping

Index	Sub	R/W	Definition
2026H	01h	R	Each bit corresponds to the different input terminals
	02h	R	Each bit corresponds to the different input terminals
	03h~40h	R	Reserved
	41h	RW	Each bit corresponds to the different output terminals
	42h~60h	R	Reserved
	61h	R	AVI (%)
	62h	R	ACI (%)
	63h	R	AUI (%)
	64h~A0h	R	Reserved
	A1h	RW	AFM1 (%)
	A2h	RW	AFM2 (%)

Index 2026-01	Bit 0	Bit 1	Bit 2	Bit 3	Bit 4	Bit 5	Bit 6	Bit 7	Bit8	Bit9	Bit10	Bit11	Bit12	Bit13	Bit14	Bit15
1	FWD	REV	MI1	MI2	MI3	MI4	MI5	MI6	MI7	MI8						

1：Control broad I/O(Standard)

2：Add external card, EMM-D33A

Index 2026-41	Bit 0	Bit 1	Bit 2	Bit 3	Bit 4	Bit 5	Bit 6	Bit 7	Bit8	Bit9	Bit10	Bit11	Bit12	Bit13	Bit14	Bit15
1	RY	保留	保留	MO1	MO2											

1：Control broad I/O(Standard)

Delta Standard Mode (New definition)

Index	sub	R/W	Size	Descriptions			Speed Mode
				bit	Definition	Priority	
2060h	00h	R	U8				
	01h	RW	U16	0	Ack	4	0:fcmd =0 1:fcmd = Fset(Fpid)
				1	Dir	4	0: FWD run command 1: REV run command
				2			
				3	Halt		0: drive run till target speed is attained 1: drive stop by declaration setting
				4	Hold		0: drive run till target speed is attained 1: frequency stop at current frequency
				5	JOG		0:JOG OFF Pulse 1:JOG RUN
				6	QStop		Quick Stop
				7	Power		0:Power OFF 1:Power ON
				14~8	Cmd SW		Multi-step frequency switching
				15			Pulse 1: Fault code cleared
	02h	RW	U16				
	03h	RW	U16				Speed command (unsigned decimal)
	04h	RW	U16				
	05h	RW	S32				
	06h	RW					
	07h	RW	U16				
	08h	RW	U16				
2061h	01h	R	U16	0	Arrive		Frequency attained
				1	Dir		0: Motor FWD run 1: Motor REV run
				2	Warn		Warning
				3	Error		Error detected
				4			
				5	JOG		JOG
				6	QStop		Quick stop
				7	Power On		Switch ON
				15~8			
	02h	R					
	03h	R	U16				Actual output frequency
	04h	R					
	05h	R	S32				Actual position (absolute)
	06h	R					
	07h	R	S16				Actual torque

DS402 Standard

Index	Sub	Definition	Factory Setting	R/W	Size	Unit	PDO Map	Mode	Note
6007h	0	Abort connection option code	2	RW	S16		Yes		0: No action 2: Disable Voltage, 3: quick stop
603Fh	0	Error code	0	R0	U16		Yes		
6040h	0	Control word	0	RW	U16		Yes		
6041h	0	Status word	0	R0	U16		Yes		
6042h	0	vl target velocity	0	RW	S16	rpm	Yes	vl	
6043h	0	vl velocity demand	0	RO	S16	rpm	Yes	vl	
6044h	0	vl control effort	0	RO	S16	rpm	Yes	vl	
604Fh	0	vl ramp function time	10000	RW	U32	1ms	Yes	vl	Unit must be: 100ms, and check if the setting is set to 0.
6050h	0	vl slow down time	10000	RW	U32	1ms	Yes	vl	
6051h	0	vl quick stop time	1000	RW	U32	1ms	Yes	vl	
605Ah	0	Quick stop option code	2	RW	S16		No		0 : disable drive function 1 :slow down on slow down ramp 2: slow down on quick stop ramp 5 slow down on slow down ramp and stay in QUICK STOP 6 slow down on quick stop ramp and stay in QUICK STOP
605Ch	0	Disable operation option code	1	RW	S16		No		0: Disable drive function 1: Slow down with slow down ramp; disable of the drive function
6060h	0	Mode of operation	2	RW	S8		Yes		1: Profile Position Mode 2: Velocity Mode 4: Torque Profile Mode 6: Homing Mode
6061h	0	Mode of operation display	2	RO	S8		Yes		Same as above

15-5 CANopen Fault Codes

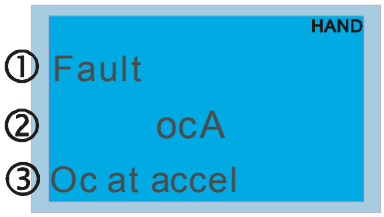

① Display error signal
② Abbreviate error code
The code is displayed as shown on KPMS-LE01
③ Display error description

* Refer to setting of Pr. 06-17~Pr. 06~22 and Pr. 14-70~Pr. 14-73

Setting *	Display	Fault code	Description	CANopen fault register (bit 0~7)	CANopen fault code
1	HAND Fault ocA Oc at accel	0001H	Over-current during acceleration	1	2213H
2	HAND Fault ocd Oc at decel	0002H	Over-current during deceleration	1	2213H
3	HAND Fault ocn Oc at normal SPD	0003H	Over-current during steady status operation	1	2214H
4	HAND Fault GFF Ground fault	0004H	Ground fault. When (one of) the output terminal(s) is grounded, short circuit current is more than 50% of AC motor drive rated current. NOTE: The short circuit protection is provided for AC motor drive protection, not for protection of the user.	1	2240H
6	HAND Fault ocS Oc at stop	0006H	Over-current at stop. Hardware failure in current detection	1	2214H
7	HAND ovA Ov at accel	0007H	Over-current during acceleration. Hardware failure in current detection	2	3210H
8	HAND Fault ovd Ov at decel	0008H	Over-current during deceleration. Hardware failure in current detection.	2	3210H
9	HAND Fault ovn Ov at normal SPD	009H	Over-current during steady speed. Hardware failure in current detection.	2	3210H

Setting *	Display	Fault code	Description	CANopen fault register (bit 0~7)	CANopen fault code
10	HAND Fault ovS Ov at stop	000AH	Over-voltage at stop. Hardware failure in current detection	2	3210H
11	HAND Fault LvA Lv at accel	000BH	DC BUS voltage is less than Pr.06.00 during acceleration.	2	3220H
12	HAND Fault Lvd Lv at decel	000CH	DC BUS voltage is less than Pr.06.00 during deceleration.	2	3220H
13	HAND Fault Lvn Lv at normal SPD	000DH	DC BUS voltage is less than Pr.06.00 in constant speed.	2	3220H
14	HAND Fault LvS Lv at stop	000EH	DC BUS voltage is less than Pr.06-00 at stop	2	3220H
15	HAND Fault OrP Phase Lacked	000FH	Phase Loss Protection	2	3130H
16	HAND Fault oH1 IGBT over heat	0010H	IGBT overheat IGBT temperature exceeds protection level.	3	4310H
18	HAND Fault tH1o Thermo 1 open	0012H	IGBT over-heat protection error	3	FF00H
21	HAND Fault oL Inverter oL	0015H	Overload. The AC motor drive detects excessive drive output current.	1	2310H
22	HAND Fault EoL1 Thermal relay 1	0016H	Electronics thermal relay 1 protection	1	2310H
23	HAND Fault EoL2 Thermal relay 2	0017H	Electronics thermal relay 2 protection	1	2310H

Setting *	Display	Fault code	Description	CANopen fault register (bit 0~7)	CANopen fault code
24	HAND Fault oH3 Motor over heat	0018H	Motor PTC overheat	3	FF20H
26	HAND Fault ot1 Over torque 1	001AH	When the output current exceeds the over-torque detection level (Pr. 06-07 or Pr. 06-10) and also exceeds Pr. 06-08 or Pr. 06-11, when Pr. 06-06 or Pr. 06-09 is set as 1 or 3, it will display warning without abnormal record; when Pr. 06-06 or 06-09 is set as 2 or 4, it will display error, stop running and there will be an abnormal record.	3	8311H
27	HAND Fault ot2 Over torque 2	001BH		3	8311H
28	HAND Fault uC Under torque 1	001CH	Low current	1	8321H
31	HAND Fault cF2 EEPROM read Err	001FH	Internal EEPROM cannot be programmed.	5	5530H
33	HAND Fault cd1 Ias sensor Err	0021H	U-phase error	1	FF04H
34	HAND Fault cd2 Ibs sensor Err	0022H	V-phase error	1	FF05H
35	HAND Fault cd3 Ics sensor Err	0023H	W-phase error	1	FF06H
36	HAND Fault Hd0 cc HW Error	0024H	cc (current clamp) hardware error	5	FF07H
37	HAND Fault Hd1 oc HW Error	0025H	oc hardware error	5	FF08H
40	HAND Fault AUE Auto tuning Err	0028H	Auto tuning error	1	FF21H

Setting *	Display	Fault code	Description	CANopen fault register (bit 0~7)	CANopen fault code
41	HAND Fault AFE PID Fbk Error	0029H	PID loss (ACI)	7	FF22H
42	HAND Fault PGF1 PG Fbk Error	002AH	PG feedback error	7	7301H
43	HAND Fault PGF2 PG Fbk Loss	002BH	PG feedback loss	7	7301H
44	HAND Fault PGF3 PG Fbk Over SPD	002CH	PG feedback stall	7	7301H
45	HAND Fault PGF4 PG Fbk deviate	002DH	PG slip error	7	7301H
48	HAND Fault ACE ACI loss	0030H	ACI loss	1	FF25H
49	HAND Fault EF External Fault	0031H	External Fault. When the multi-function input terminal (EF) is active, the AC motor drive will stop output.	5	9000H
50	HAND Fault EF1 Emergency stop	0032H	Emergency stop. When the multi-function input terminal (EF1) is active, the AC motor drive will stop output.	5	9000H
51	HAND Fault bb Base block	0033H	External Base Block. When the multi-function input terminal (B.B) is active, the AC motor drive will stop output.	5	9000H
52	HAND Fault Pcod Password Error	0034H	Keypad is locked after enter wrong password three times.	5	FF26H
54	HAND Fault cE1 Modbus CMD err	0036H	Modbus function code error (Illegal function code)	4	7500H

Setting *	Display	Fault code	Description	CANopen fault register (bit 0~7)	CANopen fault code
55	HAND Fault cE2 Modbus ADDR err	0037H	Modbus data address is error [Illegal data address (00 H to 254 H)]	4	7500H
56	HAND Fault cE3 Modbus DATA err	0038H	Modbus data error (Illegal data value)	4	7500H
57	HAND Fault cE4 Modbus slave FLT	0039H	Modbus communication error (Data is written to read-only address)	4	7500H
58	HAND Fault cE10 Modbus time out	003AH	Modbus transmission time-out	4	7500H
61	HAND Fault ydc Y-delta connect	003DH	Y-connection / Δ-connection switch error	2	3330H
62	HAND Fault dEb Dec. Energy back	003EH	Energy regeneration when decelerating	2	FF27H
63	HAND Fault oSL Over slip Error	003FH	When motor slip exceeds Pr. 07-29 setting and exceeds Pr. 07-30 time setting, it will show the fault.	7	FF28H
72	HAND Fault STL1 STO Loss 1	0048H	S1~DCM internal hardware detect error	5	FF30H
76	HAND Fault STo STO	004CH	Safety torque off function active	5	FF31H
77	HAND Fault STL2 STO Loss 2	004DH	S2~DCM internal hardware detect error.	5	FF32H
78	HAND Fault STL3 STO Loss 3	004EH	S1~DCM & S2~DCM internal hardware detect error.	5	FF33H

Setting *	Display	Fault code	Description	CANopen fault register (bit 0~7)	CANopen fault code
79	HAND Fault Aoc U phase oc	0050H	U-phase short circuit	1	FF2BH
80	HAND Fault boc V phase oc	0051H	V-phase short circuit	1	FF2CH
81	HAND Fault coc W phase oc	0050H	W-phase short circuit	1	FF2DH
82	HAND Fault oPL1 U phase lacked	0052H	Output phase loss 1 (Phase U)	2	2331H
83	HAND Fault oPL2 V phase lacked	0053H	Output phase loss 2 (Phase V)	2	2332H
84	HAND Fault oPL3 W phase lacked	0054H	Output phase loss 3 (Phase W)	2	2333H
87	HAND Fault oL3 Derating Error	0057H	Over load protection at low frequency	0	8A00H
89	HAND Fault RoPd Rotor Pro. Error	0059H	Initial rotor position detection error	0	8A00H
101	HAND Fault CGdE Guarding T-out	0065H	CANopen guarding error	4	8130H
102	HAND Fault CHbE Heartbeat T-out	0066H	CANopen heartbeat error	4	8130H
104	HAND Fault CbFE CAN/S bus off	0068H	CANopen bus off error	4	8140H

Setting *	Display	Fault code	Description	CANopen fault register (bit 0~7)	CANopen fault code
105	HAND Fault CIdE CAN/S Idx exceed	0069H	CANopen index error	4	8100H
106	HAND Fault CAdE CAN/S add. set	006AH	CANopen station address error	4	8100H
107	HAND Fault **CFrE** CAN/S FRAM fail	006BH	CANopen memory error	4	8100H
121	HAND Fault **CP20** CP 20	007AH	Internal communication error	7	FF36H
123	HAND Fault **CP22** CP 22	007CH	Internal communication error	7	FF38H
124	HAND Fault **CP30** CP 30	007DH	Internal communication error	7	FF39H
126	HAND Fault **CP32** CP 32	0080H	Internal communication error	7	FF3BH
127	HAND Fault **CP33** CP 33	0081H	Software version error	7	FF3CH
128	HAND Fault **ot3** Over torque 3	0082H	Over torque fault 3	1	2310H
129	HAND Fault **ot4** Over torque 4	0083H	Over torque fault 4	1	2310H
134	HAND Fault **EoL3** Thermal relay 3	0088H	Electronics thermal relay 3 protection	1	2310H

Setting *	Display	Fault code	Description	CANopen fault register (bit 0~7)	CANopen fault code
135	HAND Fault **EoL4** Thermal relay 4	0089H	Electronics thermal relay 4 protection	1	2310H
140	HAND Fault **Hd6** GFF HW error	008EH	GFF detected when power on	1	2240H
141	HAND Fault **BGFF** BeforeRUN GFF	0090H	GFF occurs before run	1	2240H
142	HAND Fault **AUE1** Auto tuning Err1	0091H	Auto tune error 1 (In DC test stage)	1	FF3DH
143	HAND Fault **AUE2** Auto tuning Err2	0092H	Auto tune error 2 (High frequency test stage)	1	FF3EH
144	HAND Fault **AUE3** Auto tuning Err3	0093H	Auto tune error 3 (Rotary test stage)	1	FF3FH

15-6 CANopen LED Function

There are two CANopen flash signs: RUN and ERR.

RUN LED:

LED status	Condition	CANopen State
OFF	Keep lighting off	Initial
Blinking	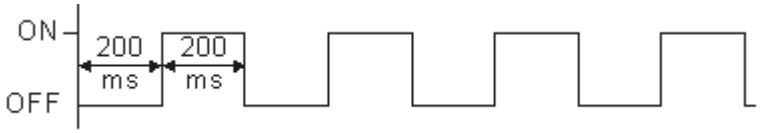	Pre-Operation
Single flash	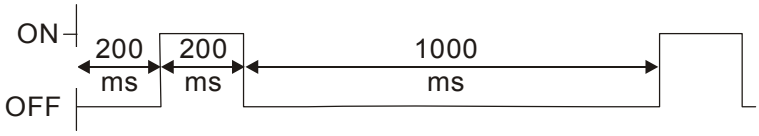	Stopped
ON	Keep lighting on	Operation

ERR LED:

LED status	Condition/ State
OFF	No Error
Single flash	One Message fail 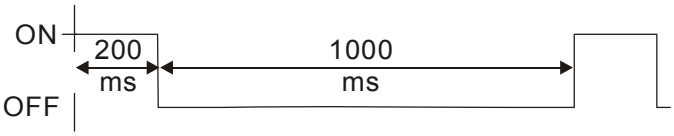
Double flash	Guarding fail or heartbeat fail 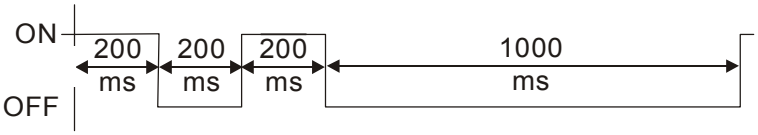
Triple flash	SYNC fail 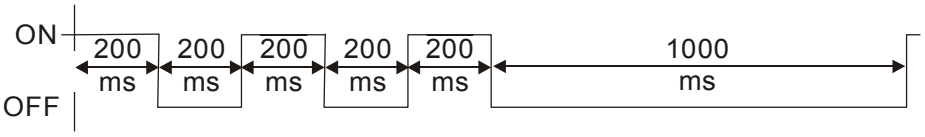
ON	Bus off

[This page intentionally left blank]

Chapter 16 PLC Function Applications

16-1 PLC Summary

16-2 Notes before PLC use

16-3 Turn on

16-4 Basic principles of PLC ladder diagrams

16-5 Various PLC device functions

16-6 Introduction to the Command Window

16-7 Error display and handling

16-8 Explanation of PLC speed mode control

16-9 Count function using pulse input (MS300: MI7 33KHz)

16-1 PLC Summary

16-1-1 Introduction

The commands provided by the MS300's built-in PLC functions, including the ladder diagram editing tool WPLSoft, as well as the usage of basic commands and applications commands, chiefly retain the operating methods of Delta's PLC DVP series.

16-1-2 WPLSoft ladder diagram editing tool

WPLSoft is Delta's program editing software for the DVP and MS300 programmable controllers in the Windows operating system environment. Apart from general PLC program design general Windows editing functions (such as cut, paste, copy, multiple windows, etc.), WPLSoft also provides many Chinese/English annotation editing and other convenience functions (such as registry editing, settings, file reading, saving, and contact graphic monitoring and settings, etc.).

The following basic requirements that need to install WPLSoft editing software:

Item	System requirements
Operating system	Windows 95/98/2000/NT/ME/XP
CPU	At least Pentium 90
Memory	At least 16MB (we recommend at least 32MB)
Hard drive	Hard drive capacity: at least 100MB free space One optical drive (for use in installing this software)
Display	Resolution: 640×480, at least 16 colors; it is recommended that the screen area be set at 800×600 pixels
Mouse	Ordinary mouse or Windows-compatible device
Printer	Printer with a Windows drive program
RS-485 port	Must have at least an RS-485 port to link to the PLC

16-2 Notes before PLC use

1. The MS300 provides 2 communications serial ports that can be used to download PLC programs (see figure below).
2. Channel 1 communications format is the same as channel 2.
3. Channel 2 has a preset communications format of 7,N, 2, 9600, ASCII can be changed in Pr. 09-01 (transmission speed) and Pr. 09-04 (communication protocol).
4. The PLC preset is node 2; the PLC node can be changed in Pr. 09-35, but this address may not be the same as the drive's address setting of Pr. 09-00.

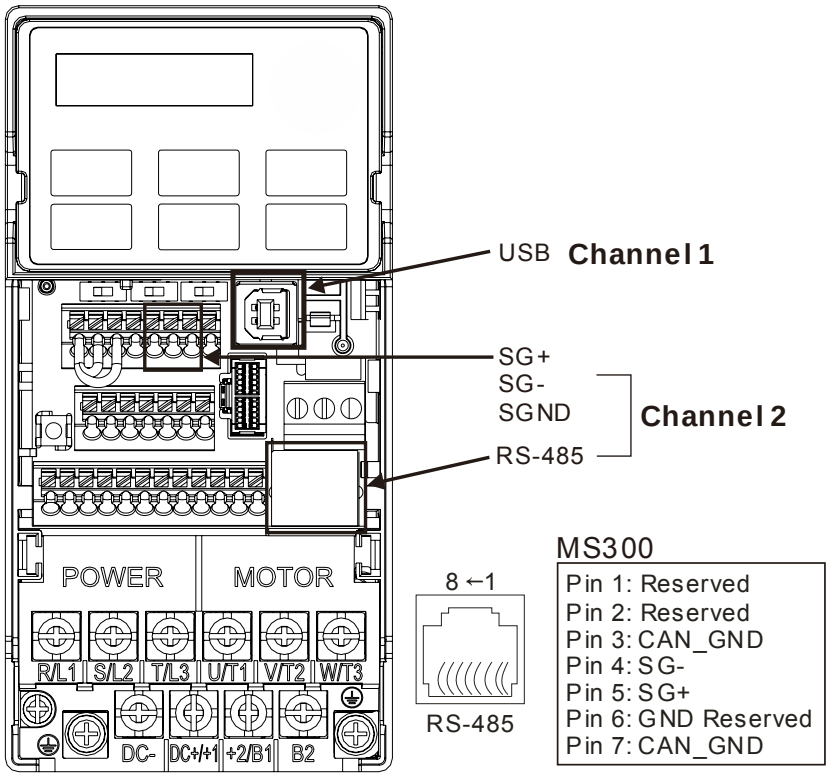

5. The client can simultaneously access data from the drive and internal PLC, which is performed through identification of the node. For instance, if the drive node is 1 and the internal PLC node is 2, then the client command will be
   - 01 (node) 03 (read) 0400 (address) 0001 (1 data item), indicating that it must read the data in drive Pr. 04-00
   - 02 (node) 03 (read) 0400 (address) 0001 (1 data item), indicating that it must read the data in internal PLC X0
6. The PLC program will be disabled when uploading/downloading programs.
7. Please note when using WPR commands to write in parameters, values may be modified up to a maximum of 10^6 times, otherwise a memory write error will occur. The calculation of modifications is based on whether the entered value has been changed. If the entered value is left unchanged, the modifications will not increase afterwards. But if the entered value is different from before, the number of modifications will increase by one.

8. When Pr. 00-04 is set as 28, the displayed value will be the value of PLC register D1043 (see figure below):

Digital Keypad KPC-CC01 (optional)
Can display 0~65535

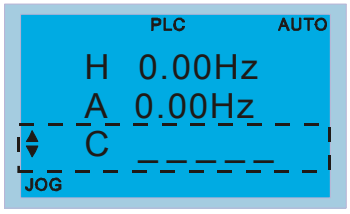

9. In the PLC Run and PLC Stop mode, the content 9 and 10 of Pr. 00-02 cannot be set and cannot be reset to the default value.
10. The PLC can be reset to the default value when Pr. 00-02 is set as 6.
11. The corresponding MI function will be disabled when the PLC writes to input contact X.
12. When the PLC controls drive operation, control commands will be entirely controlled by the PLC and will not be affected by the setting of Pr. 00-21.
13. When the PLC controls drive frequency commands (FREQ commands), frequency commands will be entirely controlled by the PLC, and will not be affected by the setting of Pr. 00-20 or the Hand ON/OFF configuration.
14. When the PLC controls drive operation, if the keypad Stop setting is valid, this will trigger an FStP error and cause stoppage.

16-3 Turn on

16-3-1 Connect to PC

Start operation of PLC functions in accordance with the following four steps

After pressing the Menu key and selecting 4: PLC on the KPC-CC01 digital keypad (optional), press the Enter key (see figure below).

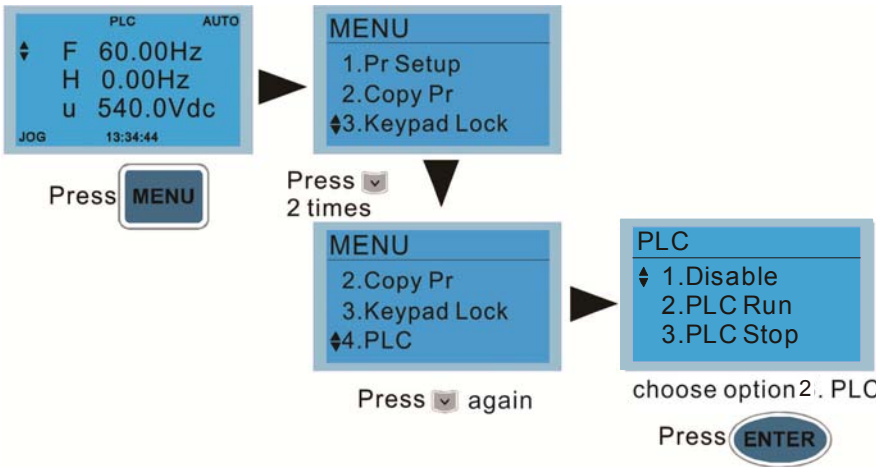

1. Wiring: Connect the drive's RJ-45 communications interface to a PC via the RS485

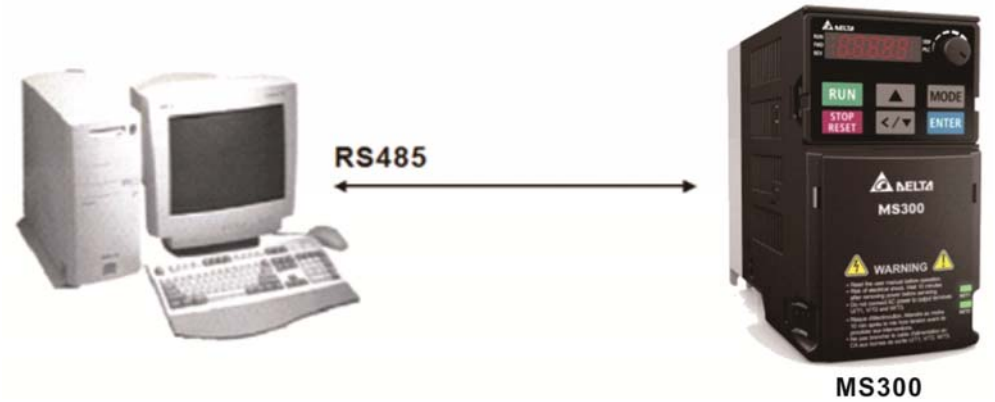

2. PLC function usage

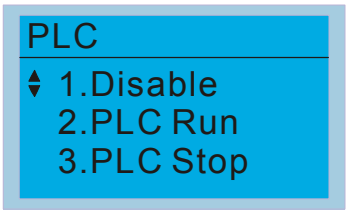	PLC functions are as shown in the figure on the left; select item 2 and implement PLC functions. 1: No function (Disable) 2: Enable PLC (PLC Run) 3: Stop PLC functions (PLC Stop)
Digital keypad (KPMS-LE01) 	PLC 0: Do not implement PLC functions PLC 1: Initiate PLC Run PLC 2: Initiate PLC Stop

- When the external multifunctional input terminals (MI1 to MI7) are in PLC Mode select bit0 (51) or PLC Mode select bit1 (52), and the terminal contact is closed or open, it will compulsorily switch to the PLC mode, and keypad switching will be ineffective. Corresponding actions are as follows:

PLC mode		PLC Mode select bit1 (52)	PLC Mode select bit0 (51)
Using KPC-CC01	MS300		
Disable	PLC 0	OFF	OFF
PLC Run	PLC 1	OFF	ON
PLC Stop	PLC 2	ON	OFF
Maintain previous state	Maintain previous state	ON	ON

Use of MS300 digital keypad to implement PLC functions

☑ When the PLC screen switches to the PLC1 screen, this will trigger one PLC action, and the PLC program start/stop can be controlled by communications via the WPL.

☑ When the PLC screen switches to the PLC2 screen, this will trigger one PLC stop, and the PLC program start/stop can be controlled by communications via the WPL.

☑ The external terminal control method is the same as shown in the table above.

NOTE

- When input/output terminals (MI1 to MI7) are included in the PLC program, these input/output terminals will only be used by the PLC. As an example, when the PLC program controls Y0 during PLC operation (PLC1 or PLC2), the corresponding output terminal relay (RA/RB/RC) will operate in accordance with the program. At this time, the multifunctional input/output terminal setting will be ineffective. Because these terminal functions are already being used by the PLC, the DI / DO / AO in use by the PLC can be determined by looking at Pr. 02-52, 02-53, and 03-30.
- When the PLC's procedures use special register D1040, the corresponding AO contact AFM1 will be occupied,
- Pr. 03-30 monitors the state of action of the PLC function analog output terminal; Bit0 corresponds to the AFM1 action state.

16-3-2 I/O device explanation

Input devices:

Serial No.	X0	X1	X2	X3	X4	X5	X6	X7	X10	X11	X12	X13	X14	X15	X16	X17
1	MI1	MI2	MI3	MI4	MI5	MI6	MI7									

Output devices:

Serial No.	Y0	Y1	Y2	Y3	Y4	Y5	Y6	Y7	Y10	Y11	Y12	Y13	Y14	Y15	Y16	Y17
1	RY			MO1	MO2											

16-3-3 Installation WPLSoft

See Delta's website for WPLSoft editing software:
http://www.delta.com.tw/product/em/download/download_main.asp?act=3&pid=3&cid=1&tpid=3

16-3-4 Program writing

After completing installation, the WPLSoft program will be installed in the designated subfolder "C:\Program Files\Delta Industrial Automation\WPLSoft x.xx." The editing software can now be run by clicking on the WPL icon using the mouse.

The WPL editing window will appear after 3 seconds (see figure below). When running WPLSoft for the first time, before "New file" has been used, only the "File (F)," "Communications (C)," View (V)," "Options (O)," and "Help (H)" columns will appear on the function toolbar.

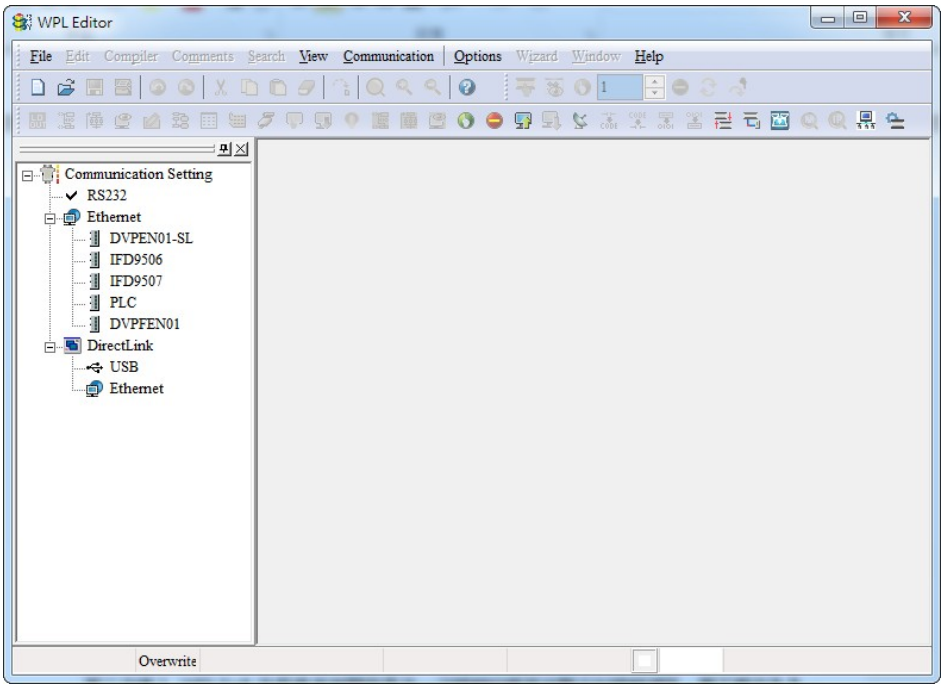

After running WPLSoft for the second time, the last file edited will open and be displayed in the editing window. The following figure provides an explanation of the WPLSoft editing software window:

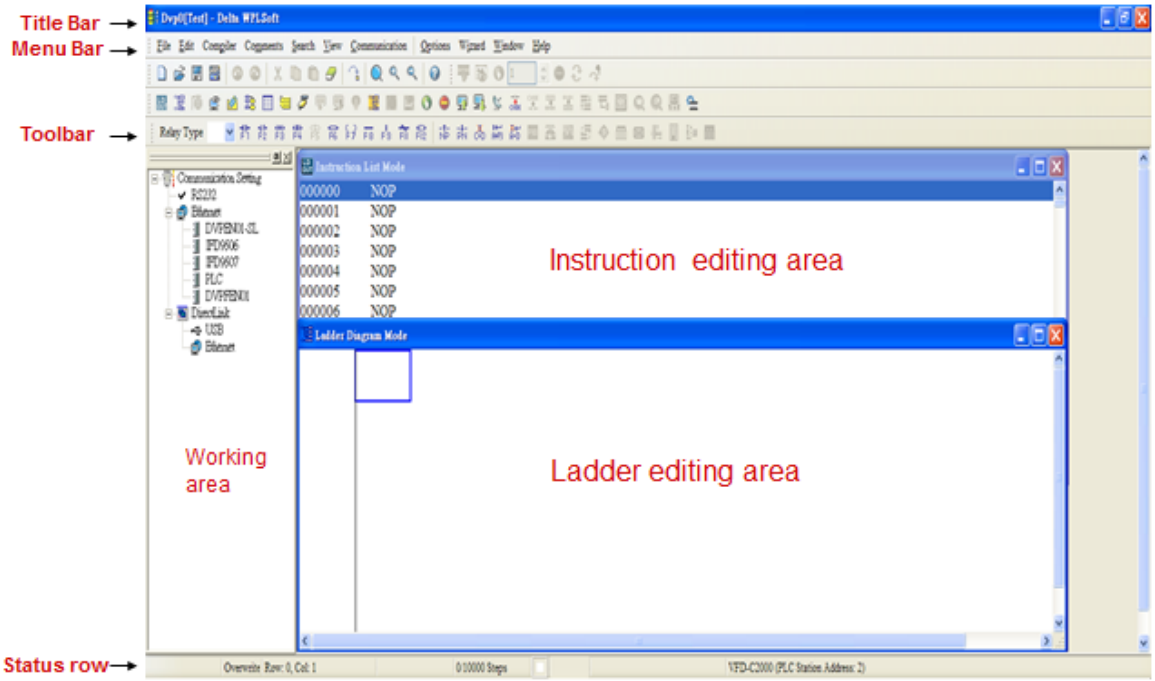

Click on the icon on the toolbar in the upper left part of the screen: opens new file (Ctrl+N)

You can also use "File (F)"=> New file (N) (Ctrl+N)

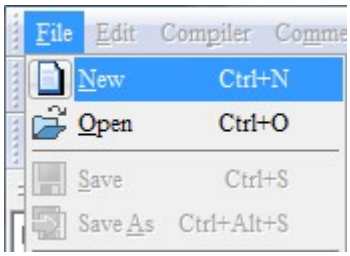

The "Device settings" window will appear after clicking. You can now enter the project title and filename, and select the device and communication settings to be used

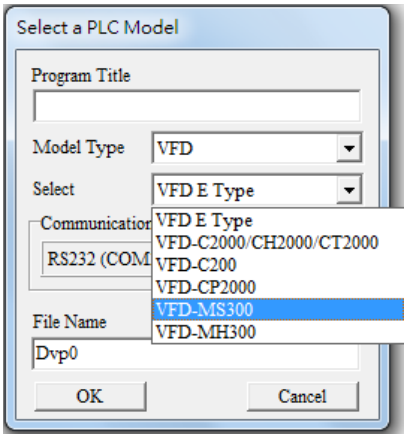

Communications settings: Perform settings in accordance with the desired communications method

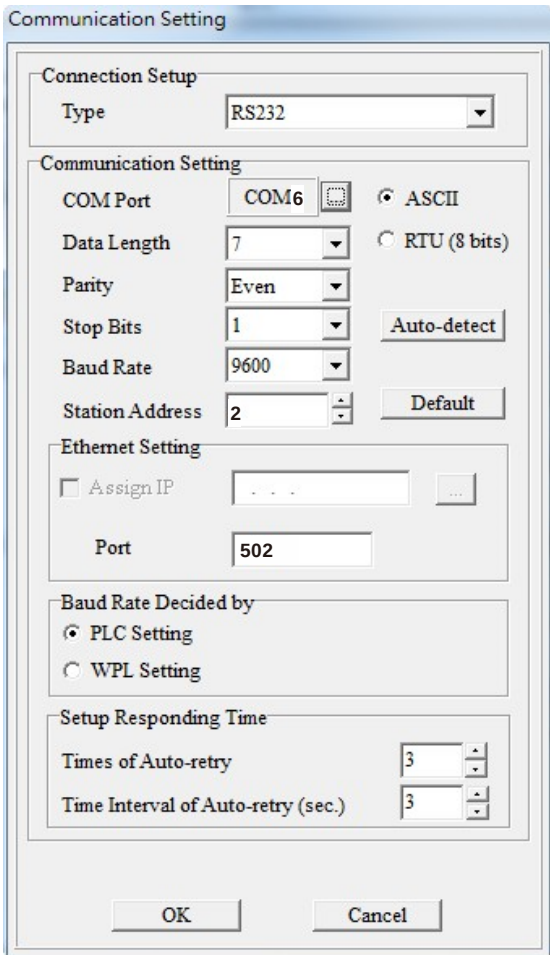

Press Confirm after completing settings and begin program editing. There are two program editing methods; you can choose whether to perform editing in the command mode or the ladder diagram mode.

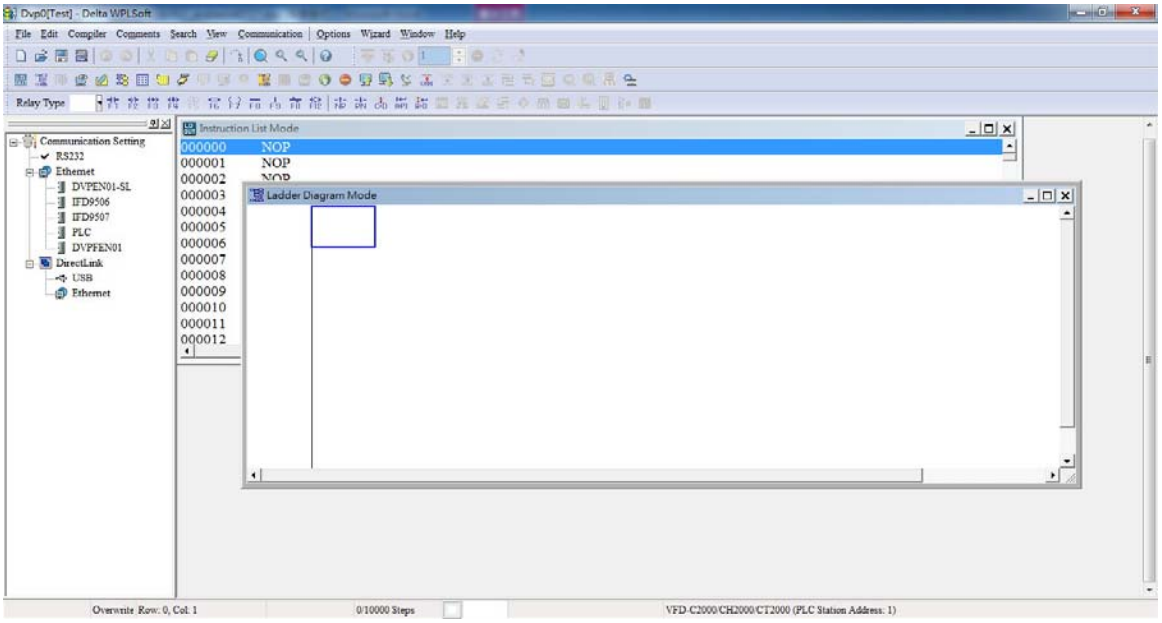

In ladder diagram mode, you can perform program editing using the buttons on the function icon row

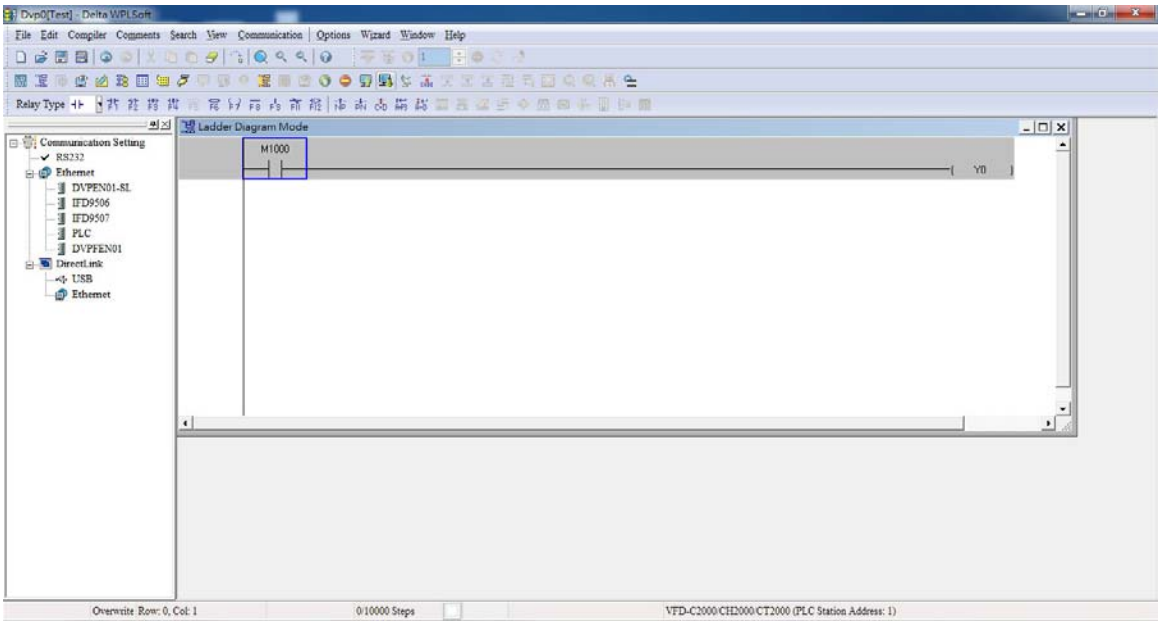

Basic Operation

Example: Input the ladder diagram in the following figure

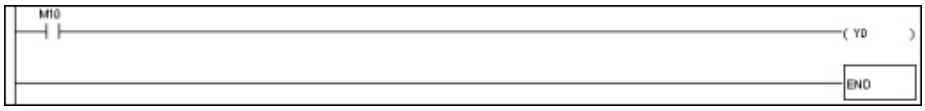

Mouse operation and keyboard function key (F1 to F12) operation

1. The following screen will appear after a new file has been established:

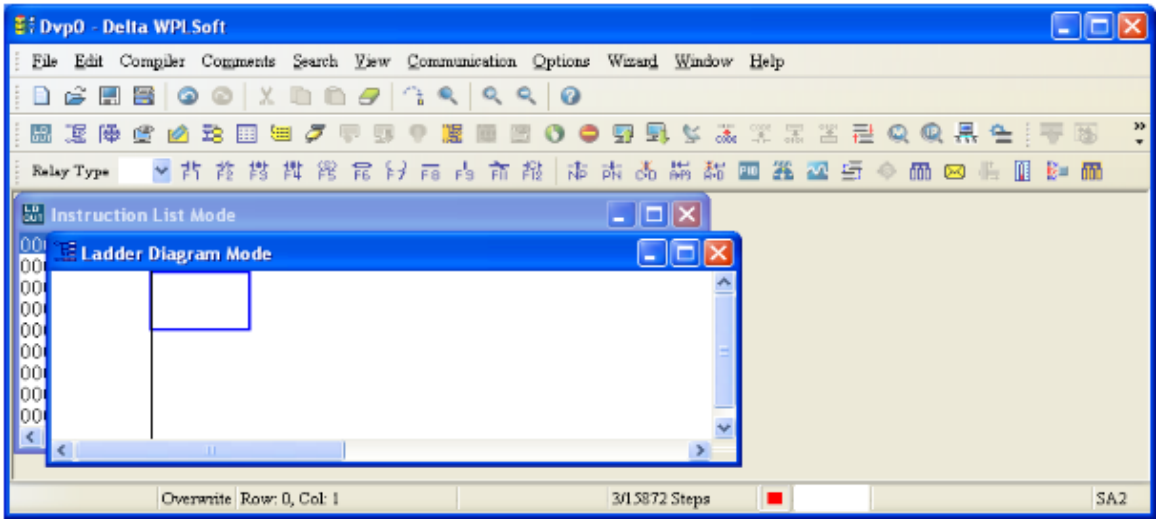

2. Use the mouse to click on the always-open switch icon or press the function key F1:

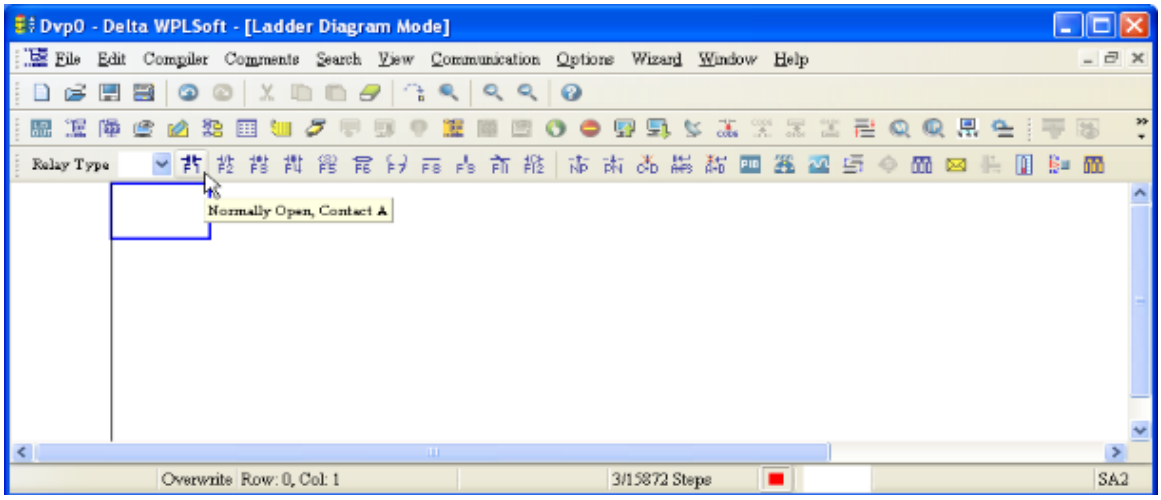

3. After the name of the input device and the comment dialog box have appeared, the device name (such as "M"), device number (such as "10"), and input comments (such as "auxiliary contact") can be selected; press the Confirm button when finished.

4. Click on the output coil icon or press function key F7. After the name of the input device and the comment dialog box have appeared, the device name (such as "Y"), device number (such as "0"), and input comments (such as "output coil") can be selected; press the Confirm button when finished.

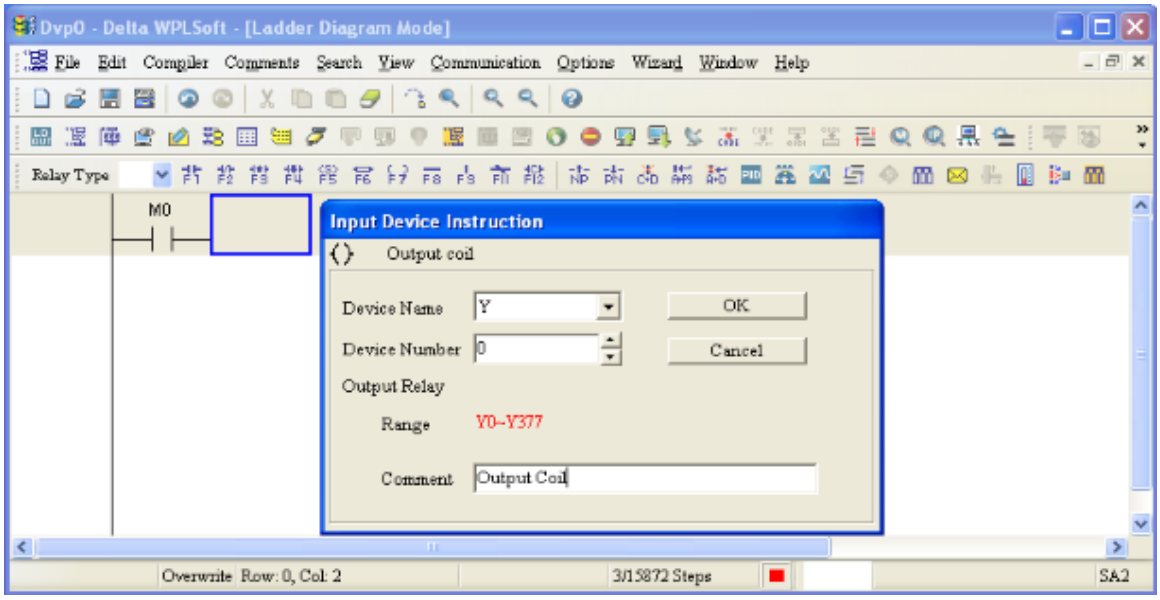

5. Click on application command icon or press function key F6. Click on "All application commands" in the function classification field, and click on the End command in the application command pull-down menu, or use the keyboard to key in "END" in that field, and press the confirm button.

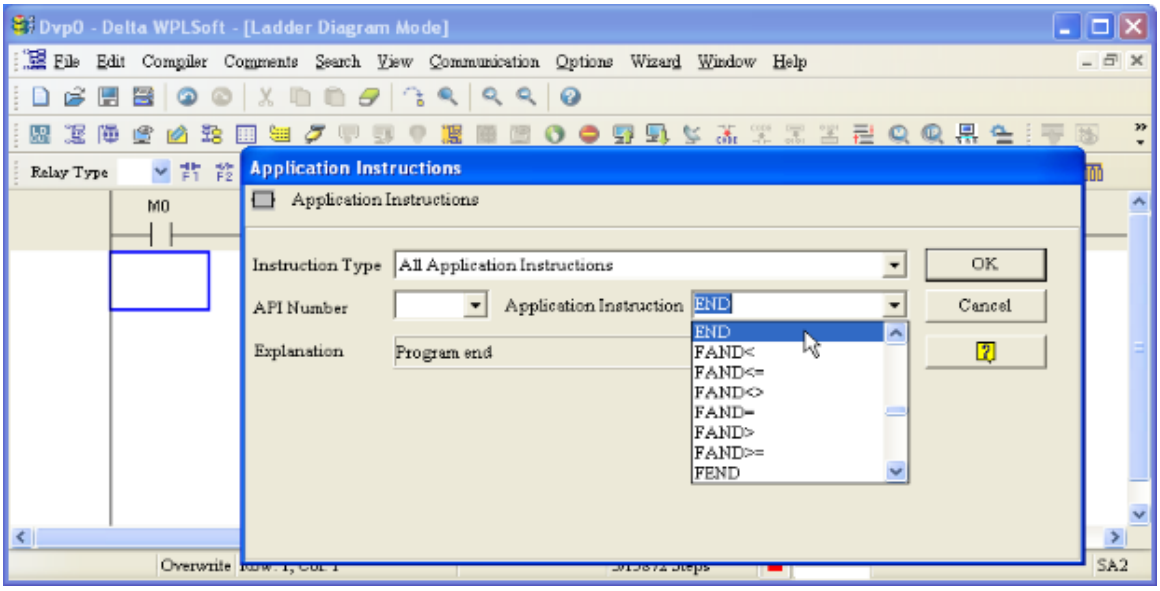

6. Click on the icon, which will compile the edited ladder diagram as a command program. After compiling, the number of steps will appear on the left side of the busbar.

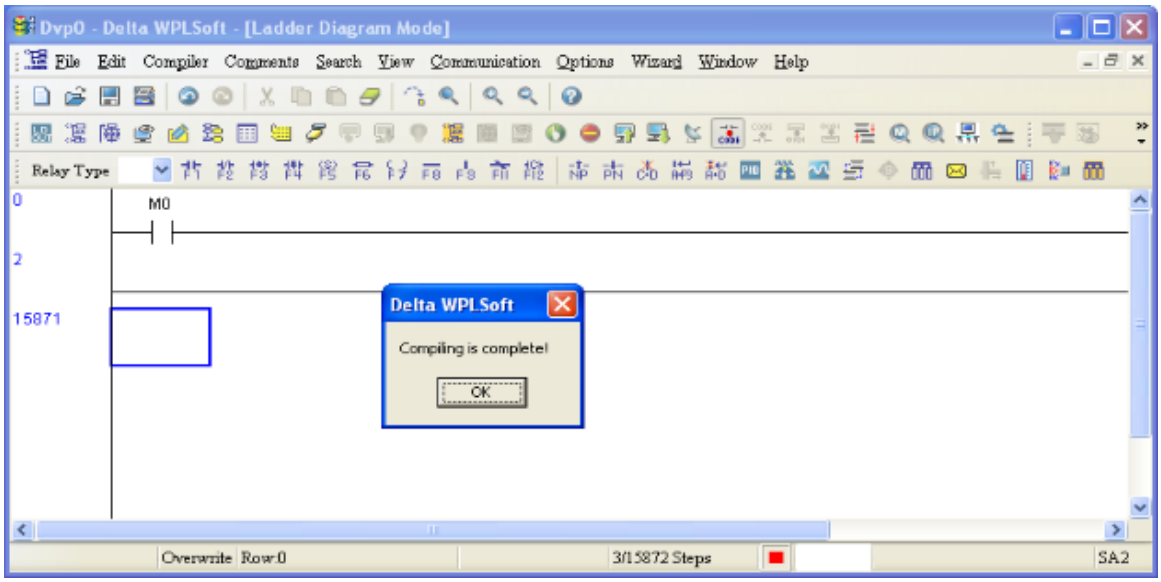

16-3-5 Program download

After inputting a program using WPLSoft, select compile . After completing compilation, select the to download a program. WPLSoft will perform program download with the online PLC in the communications format specified in communications settings.

16-3-6 Program monitoring

While confirming that the PLC is in the Run mode, after downloading a program, click on in the communications menu and select start ladder diagram control (see figure below)

16-4 Basic principles of PLC ladder diagrams

16-4-1 Schematic diagram of PLC ladder diagram program scanning

Output results are calculated on the basis of the ladder diagram configuration (internal devices will have real-time output before results are sent to an external output point)

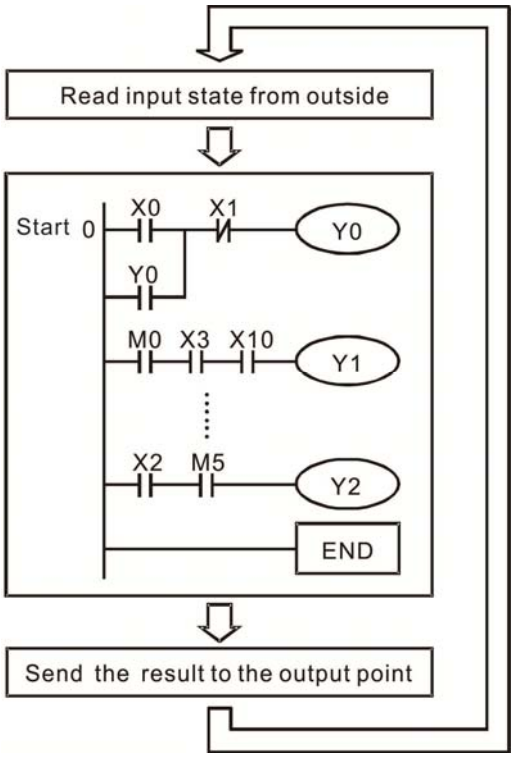

Repeated implementation

16-4-2 Introduction to ladder diagrams

Ladder diagrams comprise a graphic language widely applied in automatic control, and employs common electrical control circuit symbols. After a ladder diagram editor has been used to create a ladder pattern, PLC program designed is completed. The use of a graphic format to control processes is very intuitive, and is readily accepted by personnel who are familiar with electrical control circuit technology. Many of the basic symbols and actions in a ladder diagram comprise commonly-seen electrical devices in conventional automatic control power distribution panels, such as buttons, switches, relays, timers, and counters.

Internal PLC devices: The types and quantities of internal PLC devices vary in different brands of products. Although these internal devices use the same names as conventional electrical control circuit elements such as relays, coils, and contacts, a PLC does not actually contain these physical devices, and they instead correspond to basic elements in the PLC's internal memory (bits). For instance, if a bit is 1, this may indicate that a coil is electrified, and if that bit is 0, it will indicate that the coil is not electrified. An NO contact (Normal Open, or contact a) can be used to directly read the value of the corresponding bit, and an NC contact (Normal Close, or contact b) can be used to obtain the inverse of the bit's value. Multiple relays occupy multiple bits, and 8 bits comprise one byte; two bytes comprise one word, and two words comprise a double word. When multiple relays are processing at the same time (such as addition/subtraction or displacement, etc.), a byte, word, or double word can be used. Furthermore, a PLC contains two types of internal devices: a timer and a counter. It not only has a coil, but can count time and numerical values. Because of this, when it is necessary to process some numerical values, these values are usually in the form of bytes, words, or double words.

The various internal devices in a PLC all account for a certain quantity of storage units in the PLC's storage area. When these devices are used, the content of the corresponding storage area is red in the form of bits, bytes, or words.

Introduction to the basic internal devices in a PLC

Device type	Description of Function
Input Relay	An input relay constitutes the basic unit of storage in a PLC's internal memory corresponding to an external input point (which serves as a terminal connecting with an external input switch and receiving external input signals). It is driven by external input signals, to which it assigns values of 0 or 1. A program design method cannot change the input relay status, and therefore cannot rewrite the corresponding basic units of an input relay, and WPLSoft cannot be used to perform compulsory On/Off actions. A relay's contacts (contacts a and b) can be used an unlimited number of times. An input relay with no input signal must be left idle and cannot be used for some other purpose. ☑ Device indicated as: X0, X1, X7, X10, X11, etc. This device is expressed with the symbol "X," and a device's order is indicated with an octal number. Input point numbers are indicated in the main computer and in expansion devices.
Output Relay	An output relay constitutes the basic unit of storage in a PLC's internal memory corresponding to an external output point (which connects with an external load). It may be driven by an input relay contact, a contact on another internal device, or its own contacts. It uses one NO contact to connect with external loads or other contacts, and, like input contacts, can use the contact an unlimited number of times. An output relay with no input signal will be idle, but may be used an internal relay if needed. ☑ Device indicated as: Y0, Y1, Y7, Y10, Y11, etc. This device is expressed with the symbol "Y," and a device's order is indicated with an octal number. Output point numbers are indicated in the main computer and in expansion devices.
Internal Relay	Internal relays have no direct connection with the outside. These relays are auxiliary relays inside a PLC. Their function is the same as that of an auxiliary (central) relay in an electrical control circuit: Each auxiliary relay corresponding to a basic unit of internal storage; they can be driven by input relay contacts, output relay contacts, and the contacts of other internal devices. An internal auxiliary relay's contact can also be used an unlimited number of times. Internal relays have no outputs to outside, and must output via an output point. ☑ Device indicated as: M0, M1 to M799, etc. This device is expressed as the symbol "M," expressed, and its order is expressed as a decimal number.
Counter	A counter is used to perform counting operations. A count setting value (such as the number of pulses to be counted) must be assigned when a counter is used. A counter contains a coil, contact, and a counting storage device. When the coil goes from Off →to On, this indicates that the counter has an input pulse, and one is added to its count. There are 16 bits that can be employed by the user. ☑ Device indicated as: C0, C1 to C79, etc. This device is expressed as the symbol "C," expressed, and its order is expressed as a decimal number.
Timer	A timer is used to complete control of timing. The timer contains a coil, contact, and a time value register. When the coil is electrified, if the preset time is reached, the contact will be actuated (contact a will close, contact b will open), and the timer's fixed value be given by the set value. Timer has a regulated clock cycle (timing units: 100 ms). As soon as power to the coil is cut off, the contact will no longer be actuated (contact a will open, contact b will close), and the original timing value will return to zero. ☑ Device indicated as: T0, T1 to T159, etc. The device is expressed as the symbol "T," and its order is expressed as a decimal number.
Data register	When a PLC is used to perform various types of sequence control and set time value and count value control, it most commonly perform data processing and numerical operations, and data registers are used exclusively for storage of data and various parameters. Each data register contains 16 bits of binary data, which means that it can store one word. Two data registers with adjacent numbers can be used to process double words. ☑ Device indicated as: D0, D1 to D399, etc. The device is expressed as the symbol "D," and its order is expressed as a decimal number.

Ladder diagram images and their explanation

Ladder diagram structures	Explanation of commands	Command	Using Device
	NO switch, contact a	LD	X、Y、M、T、C
	NC switch, contact b	LDI	X、Y、M、T、C
	Series NO	AND	X、Y、M、T、C
	Series NC	ANI	X、Y、M、T、C
	Parallel NO	OR	X、Y、M、T、C
	Parallel NC	ORI	X、Y、M、T、C
	Positive edge-triggered switch	LDP	X、Y、M、T、C
	Negative edge-triggered switch	LDF	X、Y、M、T、C
	Positive edge-triggered series	ANDP	X、Y、M、T、C
	Negative edge-triggered series	ANDF	X、Y、M、T、C
	Positive edge-triggered parallel	ORP	X、Y、M、T、C
	Negative edge-triggered parallel	ORF	X、Y、M、T、C
	Block series	ANB	N/A
	Block parallel	ORB	N/A
	Multiple outputs	MPS MRD MPP	N/A
	Coil driven output commands	OUT	Y、M
	Some basic commands, applications commands	Some basic commands Applications commands	
	Inverted logic	INV	N/A

16-4-3 Overview of PLC ladder diagram editing

The program editing method begins from the left busbar and proceeds to the right busbar (the right busbar is omitted when editing using WPLSoft). Continue to the next row after completing each row; there is a maximum of 11 contacts on each row. If this is not sufficient, a continuous line will be will be generated to indicate the continued connection and more devices can be added. A continuous series of numbers will be generated automatically and identical input points can be used repeatedly. See figure below:

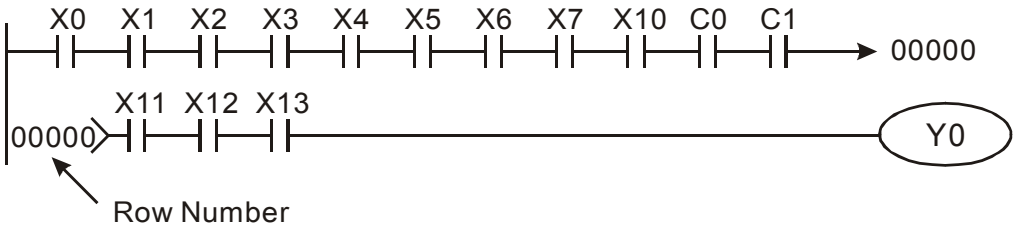

The ladder diagram programming method involves scanning from the upper left corner to the lower right corner. The coils and applications command computing box are handled in the output, and the ladder diagram is placed on the farthest right. Taking the figure below as an example, we can gradually analyze the procedural sequence of the ladder diagram. The number in the upper right corner gives the sequential order.

Explanation of command sequence

1	LD	X0	
2	OR	M0	
3	AND	X1	
4	LD	X3	
	AND	M1	
	ORB		
5	LD	Y1	
	AND	X4	
6	LD	T0	
	AND	M3	
	ORB		
7	ANB		
8	OUT	Y1	
	TMR	T0	K10

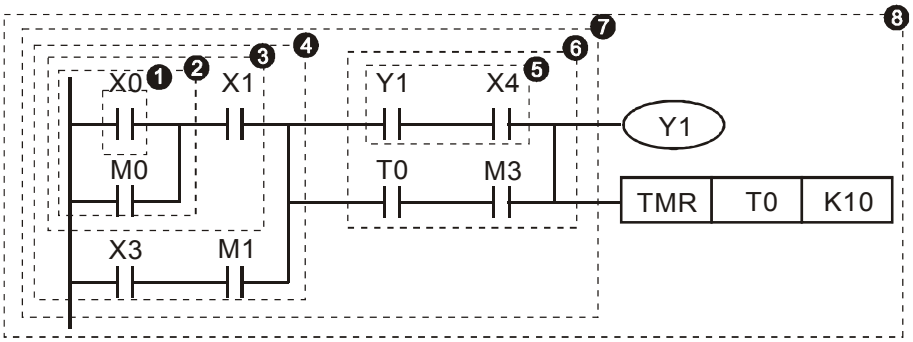

Explanation of basic structure of ladder diagrams

LD (LDI) command: An LD or LDI command is given at the start of a block.

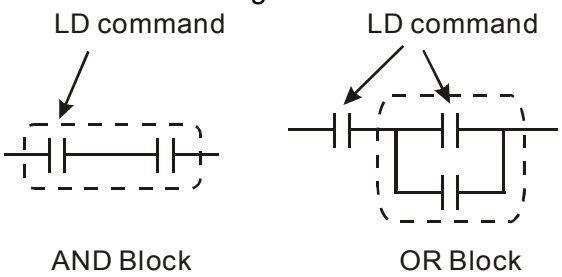

LDP and LDF have this command structure, but there are differences in their action state. LDP, LDF only act at the rising or falling edge of a conducting contact. (See figure below):

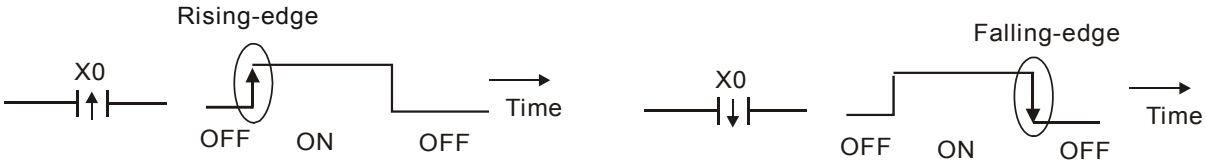

AND (ANI) command: A series configuration in which a single device is connected with one device or a block.

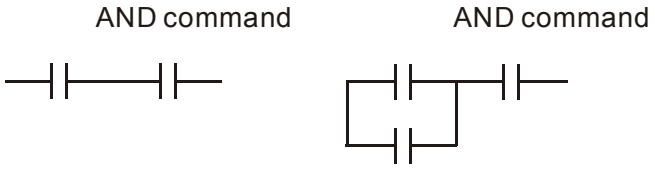

ANDP, ANDF also have structures like this, but their action occurs at the rising and falling edge.

OR (ORI) command: A single device is connected with one device or a block.

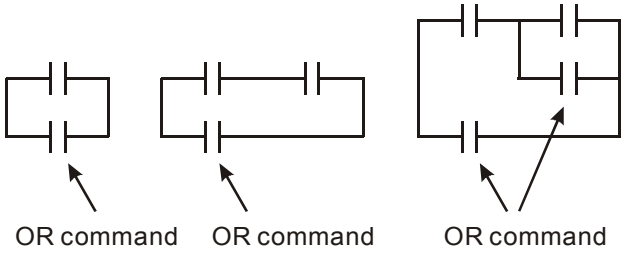

ORP, ORF also have identical structures, but their action occurs at the rising and falling edge.

ANB command: A configuration in which one block is in series with one device or block.

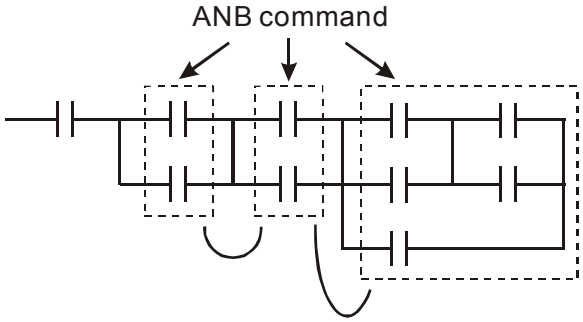

ORB command: A configuration in which one block is in parallel with one device or block.

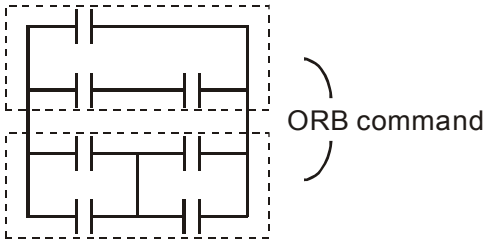

In the case of ANB and ORB operations, if a number of blocks are connected, they should be combined to form a block or network from the top down or from left to right.

MPS, MRD, MPP commands: Branching point memory for multiple outputs, enabling multiple, different outputs. The MPS command begins at a branching point, where the so-called branching point refers to the intersection of horizontal and vertical lines. We have to rely on the contact status along a single vertical line to determine whether the next contact can give a memory command. While each contact is basically able to give memory commands, in view of convenience and the PLC's capacity restrictions, this can be omitted from some places when converting a ladder diagram. The structure of the ladder diagram can be used to judge what kinds of contact memory commands are used.

MPS can be distinguished by use of the "┬" symbol; this command can be used consecutively for up to 8 times. The MRD command is read from branching point memory; because logic states along any one vertical line must be the same, in order to continue analysis of other ladder diagrams, the original contact status must be read.

MRD can be distinguished by use of the "├" symbol. The MPP command is read from the starting state of the uppermost branching point, and it is read from the stack (pop); because it is the final command along a vertical line, it indicates that the state of the vertical line can be concluded.

MPP can be distinguished by use of the "└" symbol. Although there should basically be no errors when using the foregoing analytical approach, the compiling program may sometimes omit identical state output, as shown in the following figure:

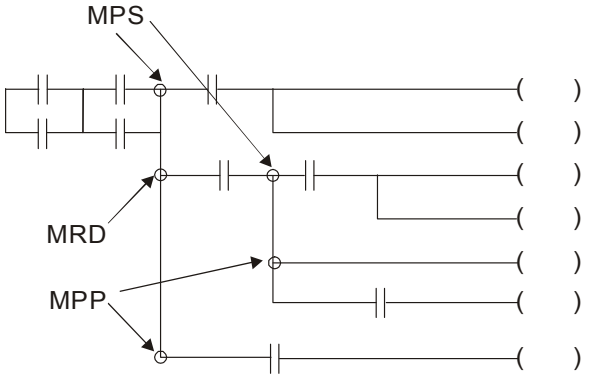

16-4-4 Commonly-used basic program design examples

Start, stop, and protection

Some applications may require a brief close or brief break using the buttons to start and stop equipment. A protective circuit must therefore be designed to maintain continued operation in these situations; this protective circuit may employ one of the following methods:

Example 1: Priority stop protective circuit

When the start NO contact X1=On, and the stop NC contact X2=Off, Y1=On; if X2=On at this time, coil Y1 will no longer be electrified, and this is therefore referred to as priority stop.

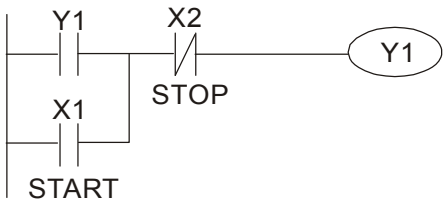

Example 2: Priority start protective circuit

When start NO contact X1=On, and the stop NC contact X2＝Off, Y1=On, and coil Y1 will be electrified and protected. At this time, if X2=On, coil Y1 will still protect the contact and continue to be electrified, and this is therefore priority start.

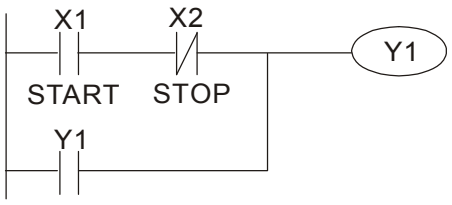

Example 3: Setting (SET) and reset (RST) command protective circuit

The following figure shows a protective circuit composed of RST and SET commands. Priority stop occurs when the RST command is placed after the SET command. Because the PLC executes programs from the top down, at the end of the program, the state of Y1 will indicate whether coil Y1 is electrified. When X1 and X2 are both actuated, Y1 will lose power, and this is therefore priority stop.

Priority start occurs when the SET command is placed after the RST command. When X1 and X2 are both actuated, Y1 will be electrified, and this is therefore priority start.

Top priority of stop

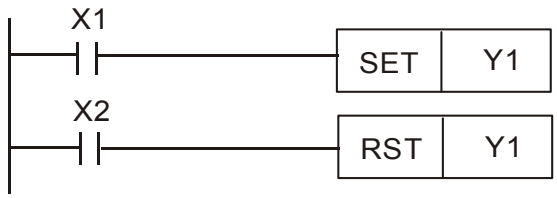

Top priority of start

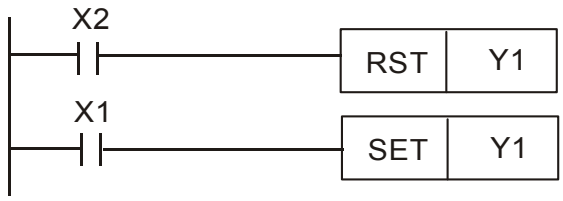

Commonly-used control circuits

Example 4: Conditional control

X1, X3 are respectively start/stop Y1, and X2, X4 are respectively start/stop Y2; all have protective circuits. Because Y1's NO contact is in series with Y2's circuit, it becomes an AND condition for the actuation of Y2. The action of Y1 is therefore a condition for the action of Y2, and Y1 must be actuated before Y2 can be actuated.

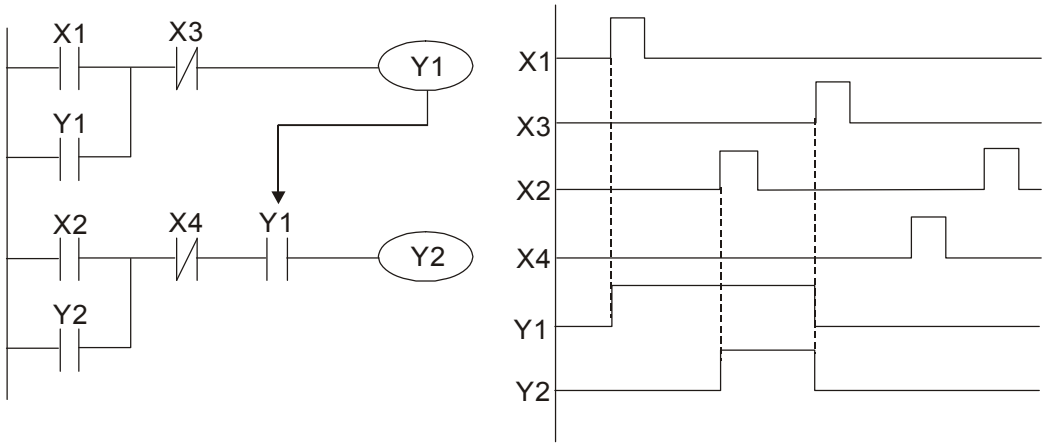

Example 5: Interlocking control

The figure below shows an interlocking control circuit. Depending on which of the start contacts X1, X2 is valid first, the corresponding output Y1 or Y2 will be actuated, and when one is actuated, the other will not be actuated. This implies that Y1 and Y2 cannot be actuated at the same time (interlocking effect). Even if both X1 and X2 are valid at the same time, because the ladder diagram program is scanned from the top down, it is impossible for Y1 and Y2 to be actuated at same time. This ladder diagram assigns priority only to Y1.

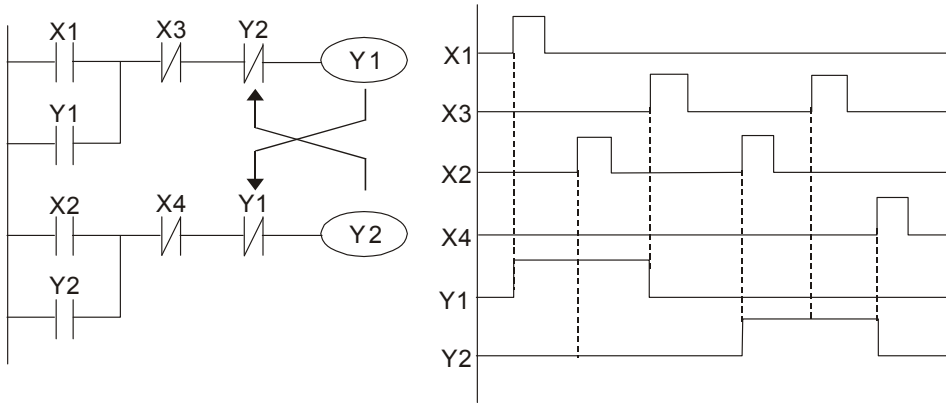

Example 6: Sequence control

If the NC contact of Y2 in the interlocking control configuration of example 5 is put in series with the Y1 circuit, so that it is an AND condition for actuation of Y1 (see figure below), not only is Y1 a condition for the actuation of Y2 in this circuit, the actuation of Y2 will also stop the actuation of Y1. This configuration confirms the actuation order of Y1 and Y2.

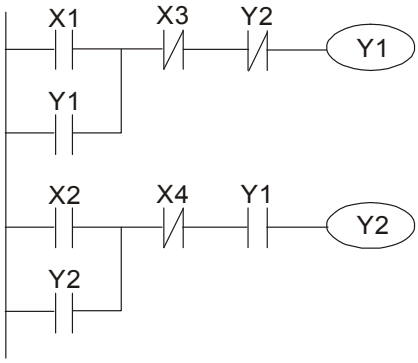

Example 7: Oscillating circuit

Oscillating circuit with a period of ΔT+ΔT

The figure below shows a very simple ladder diagram. When starting to scan the Y1 NC contact, because the Y1 coil has lost power, the Y1 NC contact will be closed. When the Y1 coil is then scanned, it will be electrified, and the output will be 1. When the Y1 NC contact is scanned in the scanning cycle, because Y1 coil is electrified, the Y1 NC contact will be open, the Y1 coil will then lose power, and the output will be 0. Following repeated scanning, the output of Y1 coil will have an oscillating waveform with a period of ΔT(On)+ΔT(Off).

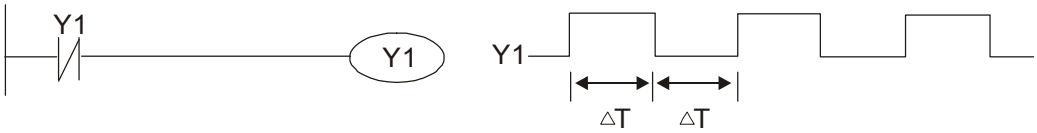

Oscillating circuit with a period of nT+ΔT

The program of the ladder diagram shown below uses timer T0 to control coil Y1's electrified time. After Y1 is electrified, it causes timer T0 to close during the next scanning cycle, which will cause the output from Y1 to have the oscillating waveform shown in the figure below. Here n is the timer's decimal setting value, and T is the clock cycle of the timer.

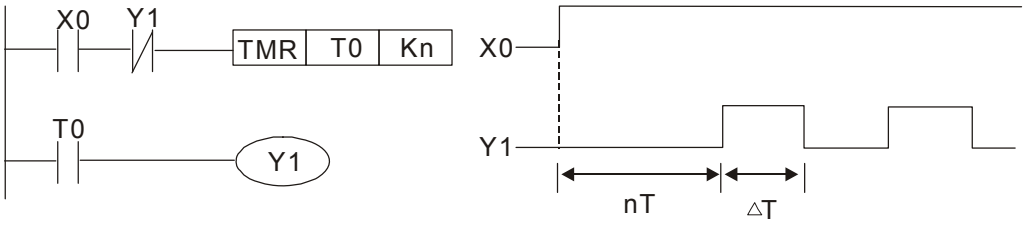

Example 8: Flashing circuit

The following figure shows an oscillating circuit of a type commonly used to cause an indicator light to flash or a buzzers to buzz. It uses two timers to control the On and Off time of Y1 coil. Here n1, n2 are the timing set values of T1 and T2, and T is the clock cycle of the timer.

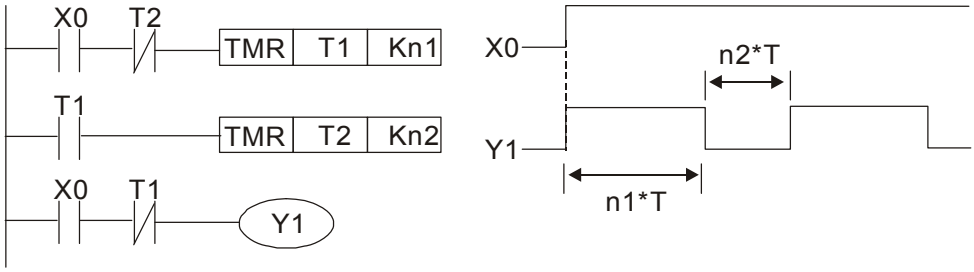

Example 9: Triggering circuit

In the figure below, a command consisting of the differential of the rising edge of X0 causes coil M0 to generate a single pulse for ΔT (length of one scanning cycle), and coil Y1 is electrified during this scanning cycle. Coil M0 loses power during the next scanning cycle, and NC contact M0 and NC contact Y1 are both closed. This causes coil Y1 to stay in an electrified state until there is another rising edge in input X0, which again causes the electrification of coil M0 and the start of another scanning cycle, while also causing coil Y1 to lose power, etc. The sequence of these actions can be seen in the figure below. This type of circuit is commonly used to enable one input to perform two actions in alternation. It can be seen from the time sequence in the figure below that when input X0 is a square wave signal with a period of T, the output of coil Y1 will be a square wave signal with a period of 2T.

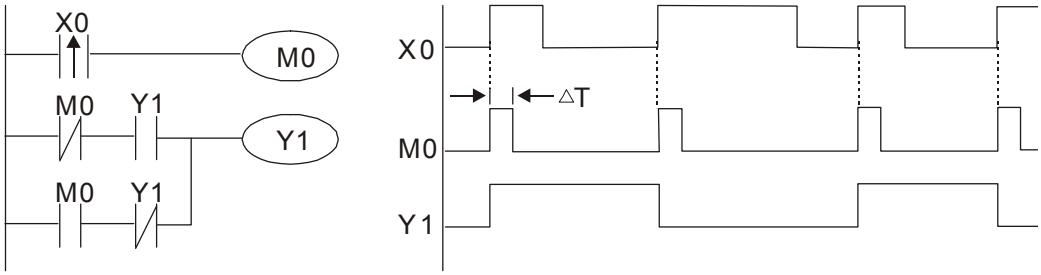

Example 10: Delay circuit

When input X0 is On, because the corresponding NC contact will be Off, the timer T10 will be in no power status, and output coil Y1 will be electrified. T10 will receive power and begin timing only after input X0 is Off, and output coil Y1 will be delayed for 100 sec. (K1000*0.1 sec. =100 sec.) before losing power; please refer to the sequence of actions in the figure below.

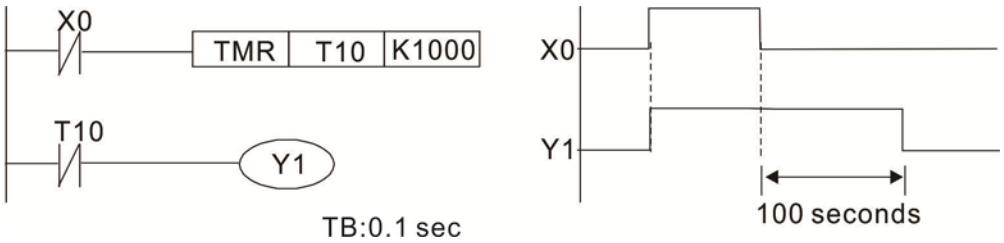

Example 11: The open/close delay circuit is composed of two timers; output Y4 will have a delay whether input X0 is On or Off.

Example 12: Extended timing circuit

In the circuit in the figure on the left, the total delay time from the moment input X0 closes to the time output Y1 is electrified is (n1+n2)*T, where T is the clock cycle. Timers: T11, T12; clock cycle: T.

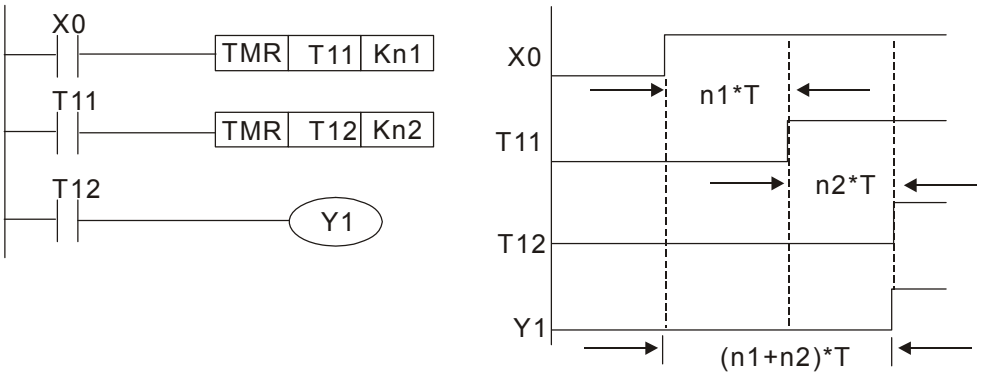

16-5 Various PLC device functions

Item	Specifications	Notes
Algorithmic control method	Program stored internally, alternating back-and-forth scanning method	
Input/output control method	When it starts again after ending (after execution to the END command), the input/output has an immediate refresh command	
Algorithmic processing speed	Basic commands (several us);	Applications command (1-several tens of us)
Programming language	Command + ladder diagram	
Program capacity	2000 steps	
Input/output terminal	Input (X): 10, output (Y): 4	This number of contacts constitutes MS300 input/output contacts; other devices have different correspondences

Type	Device	Item		Range		Function
Relay bit form	X	External input relay		X0~X17, 16 points, octal number	Total 32 points	Corresponds to external input point
	Y	External output relay		Y0~Y17, 16 points, octal number		Corresponds to external output point
	M	Auxiliary Relay	General Use	M0~M799, 800 points	Total 1080 points	Contact can switch On/Off within the program
			Special purpose	M1000~M1279, 280 points		
	T	Timer	100ms timer	T0~T79, 80 points	Total 80 points	Timers referred to by the TMR command; contact of the T with the same number will go On when the time is reached
	C	Counter	16-bit counter, general use	C0~C39, 40 points	Total 40 points	Counter referred to by the CNT command; contact of the C with the same number will go On when the count is reached
Register word data	T	Current timer value		T0~T79, 80 points		The contact will be On when the time is reached
	C	Current counter value		C0~C39, 16-bit counter 40 points		The counter contact will come On when the count is reached
	D	Data Register	Used to maintain power Off	D0~D9, 10 points	Total 420 points	Used as data storage memory area
			Special purpose	D10~D199, 190 points D1000~D1219, 220 points		
Constant	K	Decimal	Single-byte	Setting Range: K-32,768 ~ K32,767		
			Double-byte	Setting Range: K-2,147,483,648~K2,147,483,647		
	H	Hexadecimal	Single-byte	Setting Range:H0000 ~ HFFFF		
			Double-byte	Setting Range: H00000000 ~ HFFFFFFFF		
Serial communications port (program write/read)				RS-485/keypad port		
Input/output				Built-in three analog inputs and two analog outputs		
High-speed counting				Built-in a (MI7) 32-bit high-speed counter		
Function expansion module			Optional Accessories	–		
Communication Expansion Module			Optional Accessories	EMC-COP01,(CANopen)		

16-5-1 Introduction to device functions

Input/output contact functions

Input contact X functions: Input contact X is connected with an input device, and reads input signals entering the PLC. The number of times that contact A or B of input contact X is used in the program is not subject to restrictions. The On/Off state of input contact X will change as the input device switches On and Off; a peripheral device (WPLSoft) cannot be used to force contact X On or Off.

Output contact Y functions

The job of output contact Y is to send an On/Off signal to drive the load connected with output contact Y. Output contacts consist of two types: relays and transistors. While number of times that contact a or b of each output contact Y is used in the program is not subject to restrictions, it is recommended that the number of output coil Y be used only once in a program, otherwise the right to determine the output state when the PLC performs program scanning will be assigned to the program's final output Y circuit.

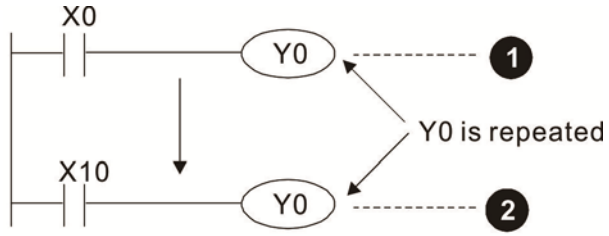

The output of Y0 will be decided by circuit ❷ ,
i.e. decided by On/Off of X10.

Numerical value, constant [K] / [H]

Constant	Single-byte	K	Decimal	K-32,768 ~ K32,767
	Double-byte			K-2,147,483,648~K2,147,483,647
	Single-byte	H	Hexadecimal	H0000 ~ HFFFF
	Double-byte			H00000000 ~ HFFFFFFFF

The PLC can use five types of numerical values to implement calculations based on its control tasks; the following is an explanation of the missions and functions of different numerical values.

Binary Number, BIN

The PLC's numerical operations and memory employ binary numbers. Binary nibbles and relevant terms are explained as follows:

Bit	Bits are the fundamental units of binary values, and have a state of either 1 or 0
Nibble	Comprised of a series of 4 bits (such as b3-b0); can be used to express a one-nibble decimal number 0-9 or hexadecimal number: 0-F.
Byte	Comprised of a series of two nibbles (i.e. 8 bits, b7-b0); can express a hexadecimal number: 00-FF.
Word	Comprised of a series of two bytes (i.e. 16 bits, b15-b0); can express a hexadecimal number with four nibbles: 0000-FFFF.
Double Word	Comprised of a series of two words (i.e. 32 bits, b31-b0); can express a hexadecimal number with eight nibbles: 00000000-FFFFFFFF

Relationship between bits, digits, nibbles, words, and double words in a binary system (see figure below):

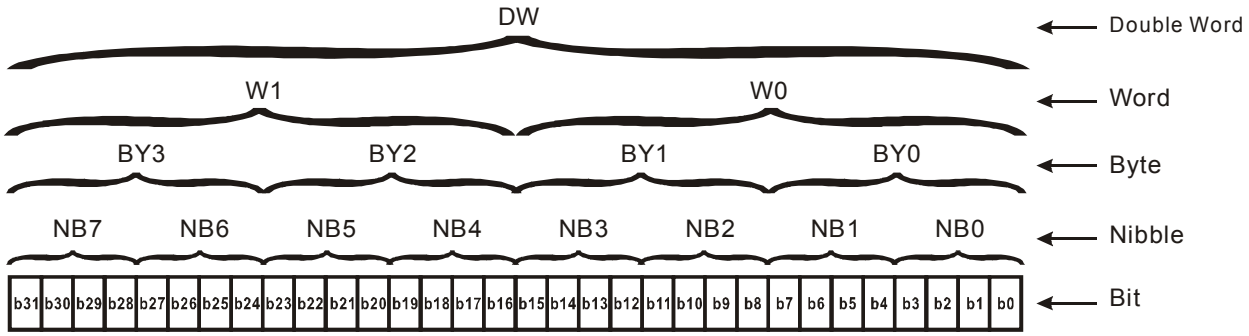

Octal Number, OCT

The external input and output terminals of a DVP-PLC are numbered using octal numbers

Example: External input: X0~X7，X10~X17…(Device number table);

External output: Y0~Y7，Y10~Y17…(Device number table)

Decimal Number, DEC

Decimal numbers are used for the following purposes in a PLC system:

- ☑ The setting values of timer T or counter C, such as TMR C0 K50. (K constant)
- ☑ The numbers of devices including M, T, C, or D, such as M10 or T30. (device number)
- ☑ Used as a operand in an application command, such as MOV K123 D0. (K constant)

Binary Code Decimal, BCD

Uses one nibble or 4 bits to express the data in a decimal number; a series of 16 bits can therefore express a decimal number with 4 nibbles. Chiefly used to read the input value of a fingerwheel numerical switch input or output a numerical value to a seven-segment display drive.

Hexadecimal Number, HEX

Applications of hexadecimal numbers in a PLC system: Used as operands in application commands, such as MOV H1A2B D0. (H constant)

Constant K

Decimal numbers are usually prefixed with a "K" in a PLC system, such as K100. This indicates that it is a decimal number with a numerical value of 100.

Exceptions: K can be combined with bit device X, Y, M, or S to produce data in the form of a nibble, byte, word, or double word, such as in the case of K2Y10 or K4M100. Here K1 represents a 4-bit combination, and K2-K4 variously represent 8-, 12-, and 16-bit combinations.

Constant H

Hexadecimal numbers are usually prefixed with the letter "H" in a PLC system, such as in the case of H100, which indicates a hexadecimal number with a numerical value of 100.

Functions of auxiliary relays

Like an output relay Y, an auxiliary relay M has an output coil and contacts A and B, and the number of times they can be used in a program is unrestricted. Users can use an auxiliary relay M to configure the control circuit, but cannot use it to directly drive an external load. Auxiliary relays have the following two types of characteristics:

Ordinary auxiliary relays: Ordinary auxiliary relays will all revert to the Off state if a power outage occurs while the PLC is running, and will remain in the Off state if power is again turned down.

Special purpose auxiliary relays: Each special purpose auxiliary relay has its own specific use. Do not use any undefined special purpose auxiliary relays.

Timer functions

Timers take 100 ms as their timing units. When the timing method is an upper time limit, when the current timer value = set value, power will be sent to the output coil. Timer setting values consist of decimal K values, and the data register D can also serve as a setting value.

Actual timer setting time = timing units * set value

Counter features

Item	16-bit counter
Type	General Type
CT Direction:	Score:
Setting	0~32,767
Designation of set value	Constant K or data register D
Change in current value	When the count reaches the set value, there is no longer a count
Output contact	When the count reaches the set value, the contact comes On and stays On
Reset	The current value reverts to 0 when an RST command is executed, and the contact reverts to Off
Contact actuation	All are actuated after the end of scanning

Counter functions

When a counter's counting pulse input signal goes Off→On, if the counter's current value is equal to the set value, the output coil will come On. The setting value will be a decimal K values, and the data register D can also serve as a setting value.

16-bit counter:

- ☑ 16-bit counter setting range: K0-K32,767. (when K0 and K1 are identical, the output contact will immediately be On during the first count.)
- ☑ The current counter value will be cleared from an ordinary counter when power is shut off to the PLC.
- ☑ If the MOV command or WPLSoft is used to transmit a value greater than the set value to the C0 current value register, when the next X1 goes from Off→On, the C0 counter contact will change to On, and the current value will change to the set value.
- ☑ A counter's setting value may be directly set using a constant K or indirectly set using the value in register D (not including special data registers D1000- D1199 or D2000 ~ D2799).
- ☑ If the set value employs a constant K, it may only be a positive number; the set value may be either a positive or negative number if the value in data register D is used. The current counter value will change from 32,767 to -32,768 as the count continues to accumulate.

Example

```
LD      X0
RST     C0
LD      X1
CNT     C0   K5
LD      C0
OUT     Y0
```

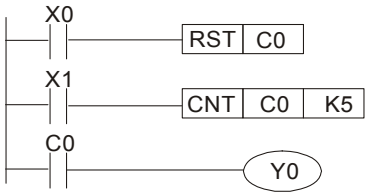

1. When X0=On and the RST command is executed, the current value of C0 will revert to 0, and the output contact will revert to Off.
2. When X1 changes from Off→On, the current value of the counter will execute an increase (add one).
3. When the count of counter C0 reaches the set value K5, the contact C0 will come On, and the current value of C0= set value =K5. Afterwards, signal C0 triggered by X1 cannot be received, and the current value of C0 will remain K5.

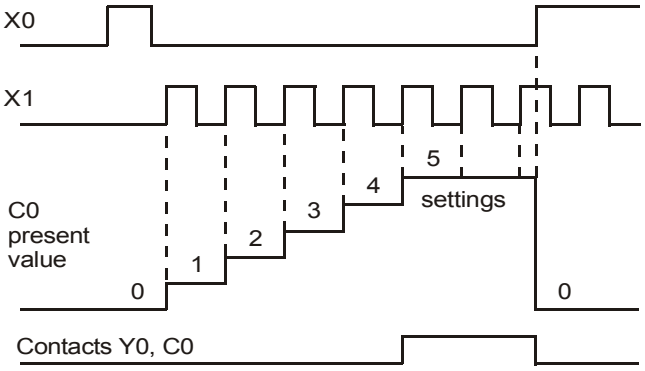

16-5-2 Introduction to special relay functions (special M)

R/W items: RO: read only function; RW: read and write function

Special M	Description of Function	R/W *
M1000	Operates monitor NO contact (contact a). NO while RUN, contact a. This contact is On while in the RUN state.	RO
M1001	Operates monitor NC contact (contact b). NC while RUN, contact b. This contact is Off while in the RUN state.	RO
M1002	Initiates a forward (the instant RUN is On) pulse. Initial pulse, contact a. Produces a forward pulse the moment RUN begins; its width = scan cycle	RO
M1003	Initiates a reverse (the instant RUN is Off) pulse. Initial pulse, contact a. Produces a reverse pulse the moment RUN ends; the pulse width = scan cycle	RO
M1004	Reserved	RO
M1005	Drive malfunction instructions	RO
M1006	Drive has no output	RO
M1007	Drive direction FWD(0)/REV(1)	RO
M1008 ~ M1010	--	--
M1011	10 ms clock pulse ，5ms On/5ms Off	RO
M1012	100 ms clock pulse ，50ms On / 50ms Off	RO
M1013	1 sec. clock pulse ，0.5s On / 0.5s Off	RO
M1014	1 min. clock pulse ，30s On / 30s Off	RO
M1015	Frequency attained (when used together with M1025)	RO
M1016	Parameter read/write error	RO
M1017	Parameter write successful	RO
M1018	--	--
M1019	--	--
M1020	Zero flag	RO
M1021	Borrow flag	RO
M1022	Carry flag	RO
M1023	Divisor is 0	RO
M1024	--	--
M1025	Drive frequency = set frequency (ON) Drive frequency =0 (OFF)	RW
M1026	Drive operating direction FWD(OFF)/REV(ON)	RW
M1027	Drive Reset	RW
M1028	--	--
M1029	--	--
M1030	--	--
M1031	--	--
M1032	--	--
M1033	--	--
M1034	--	--
M1035	--	--
M1036	--	--
M1037	--	--
M1038	MI7 count begins	RW
M1039	Reset MI7 count value	RW
M1040	Hardware power (Servo On)	RW
M1041	--	--
M1042	Quick stop	RW
M1043	--	--
M1044	Pause (Halt)	RW

Special M	Description of Function	R/W *
M1045 ~ M1047	--	--
M1048	--	--
M1049	--	--
M1050	--	--
M1051	--	--
M1052	Lock frequency (lock, frequency locked at the current operating frequency)	RW
M1053	--	--
M1054	--	--
M1055	--	--
M1056	Hardware already has power (Servo On Ready)	RO
M1057	--	--
M1058	On Quick Stopping	RO

16-5-3 Introduction to special register functions (special D)

Special D	Description of Function	R/W *
D1000	--	--
D1001	Device system program version	RO
D1002	Program capacity	RO
D1003	Total program memory content	RO
D1004 ~ D1009	--	--
D1010	Current scan time (units: 0.1 ms)	RO
D1011	Minimum scan time (units: 0.1 ms)	RO
D1012	Maximum scan time (units: 0.1 ms)	RO
D1013 ~ D1017	--	--
D1018	Current integral value	RO
D1019	Compulsory setting of PID I integral	RW
D1020	Output frequency (0.000~600.00Hz)	RO
D1021	Output current (####.#A)	RO
D1022	--	--
D1023	Communication expansion card number 0：No expansion card 1：DeviceNet Slave 2：Profibus-DP Slave 3：CANopen Slave 4：Modbus-TCP Slave 5：EtherNet/IP Slave	RO
D1024 ~ D1026	--	--
D1027	PID calculation frequency command (frequency command after PID calculation)	RO
D1028	AVI value (0.00~100.00%)	RO
D1029	ACI value (0.0~100.00%)	RO
D1030	--	--
D1031 ~ D1034	--	--

Special D	Description of Function	R/W *
D1035	VR value (0.0~100.00%)	RO
D1036	Servo error bit	RO
D1037	Drive output frequency	RO
D1038	DC BUS voltage	RO
D1039	Output voltage	RO
D1040	Analog output value AFM1(-100.00~100.00%)	RW
D1041 ~ D1042	--	--
D1043	Can be user-defined (will be displayed on panel when Pr. 00-04 is set as 28; display method is C xxx)	RW
D1044	--	-
D1045	--	--
D1046 ~ D1049	--	--
D1050	Actual Operation Mode 0：Speed 1：Position 2：Torque 3：Homing Origin	RO
D1051	--	--
D1052	--	--
D1053	--	--
D1054	MI7 current calculated count value (L Word)	RO
D1055	MI7 current calculated count value (H Word)	RO
D1056	Rotational speed corresponding to MI7	RO
D1057	MI7's rotational speed ratio	RW
D1058	MI7 refresh rate (ms) corresponding to rotational speed	RW
D1059	Number of nibbles of rotational speed corresponding to MI7 (0-3)	RW
D1060	Operation Mode setting 0: Speed	RW
D1061	485 COM1 communications time out time (ms)	RW
D1062	Torque command (torque limit in speed mode)	RW
D1063	--	--
D1064	--	--
D1065	--	--
D1066	--	--
D1067	--	--
D1068	--	--
D1069	--	--
D1100	Target frequency	RO
D1101	Target frequency (must be operating)	RO
D1102	Reference frequency	RO
D1103	--	--
D1104	--	--
D1105	--	--
D1106	--	--
D1107	π(Pi) Low word	RO
D1108	π(Pi) High word	RO
D1109	Random number	RO

16-5-4 PLC Communication address

Device	Range	Type	Address (Hex)
X	00~17 (Octal)	bit	0400~040FF
Y	00~17 (Octal)	bit	0500~050F
T	00~79	bit/word	0600~064F
M	000~799	bit	0800~0B1F
M	1000~1279	bit	0BE8~0CFF
C	0~39	bit/word	0E00~0E27
D	00~199	word	1000~10C7
D	1000~ 1219	word	13E8~ 14C3

Command code that can be used

Function Code	Description of Function	Function target
H1	Coil status read	Y,M,T,C
H2	Input status read	X,Y,M,T,C
H3	Read single unit of data	T,C,D
H5	Compulsory single coil status change	Y,M,T,C
H6	Write single unit of data	T,C,D
HF	Compulsory multiple coil status change	Y,M,T,C
H10	Write multiple units of data	T,C,D

NOTE

When PLC functions have been activated, the MS300 can match PLC and drive parameters; this method employs different addresses, drives (default station number is 1, PLC sets station number as 2)

16-6 Introduction to the Command Window

16-6-1 Overview of basic commands

- Ordinary commands

Command code	Function	OPERAND	Execution speed (us)
LD	Load contact A	X、Y、M、T、C	0.8
LDI	Load contact B	X、Y、M、T、C	0.8
AND	Connect contact A in series	X、Y、M、T、C	0.8
ANI	Connect contact B in series	X、Y、M、T、C	0.8
OR	Connect contact A in parallel	X、Y、M、T、C	0.8
ORI	Connect contact B in parallel	X、Y、M、T、C	0.8
ANB	Series circuit block	N/A	0.3
ORB	Parallel circuit block	N/A	0.3
MPS	Save to stack	N/A	0.3
MRD	Stack read (pointer does not change)	N/A	0.3
MPP	Read stack	N/A	0.3

- Output command

Command code	Function	OPERAND	Execution speed (us)
OUT	Drive coil	Y、M	1
SET	Action continues (ON)	Y、M	1
RST	Clear contact or register	Y、M、T、C、D	1.2

- Timer, counter

Command code	Function	OPERAND	Execution speed (us)
TMR	16-bit timer	T-K or T-D commands	1.1
CNT	16-bit counter	C-K or C-D (16-bit)	0.5

- Main control command

Command code	Function	OPERAND	Execution speed (us)
MC	Common series contact connection	N0~N7	0.4
MCR	Common series contact release	N0~N7	0.4

- Contact rising edge/falling edge detection command

Command code	Function	OPERAND	Execution speed (us)
LDP	Start of forward edge detection action	X、Y、M、T、C	1.1
LDF	Start of reverse edge detection action	X、Y、M、T、C	1.1
ANDP	Forward edge detection series connection	X、Y、M、T、C	1.1
ANDF	Reverse edge detection series connection	X、Y、M、T、C	1.1
ORP	Forward edge detection parallel connection	X、Y、M、T、C	1.1
ORF	Reverse edge detection parallel connection	X、Y、M、T、C	1.1

- Upper/lower differential output commands

Command code	Function	OPERAND	Execution speed (us)
PLS	Upper differential output	Y、M	1.2
PLF	Lower differential output	Y、M	1.2

- Stop command

Command code	Function	OPERAND	Execution speed (us)
END	Program conclusion	N/A	0.2

- Other commands

Command code	Function	OPERAND	Execution speed (us)
NOP	No action	N/A	0.2
INV	Inverse of operation results	N/A	0.2
P	Index	P	0.3

16-6-2 Detailed explanation of basic commands

Command	Function					
LD	Load contact A					
Operand	X0~X17	Y0~Y17	M0~M799	T0~159	C0~C79	D0~D399
	✓	✓	✓	✓	✓	—

Explanation: The LD command is used for contact A starting at the left busbar or contact A starting at a contact circuit block; its function is to save current content and save the acquired contact status in the cumulative register.

Example: Ladder diagram:

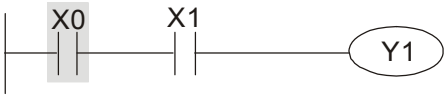

Command code:		Description:
LD	**X0**	Load Contact A of X0
AND	X1	Create series connection to contact A of X1
OUT	Y1	Drive Y1 coil

Command	Function					
LDI	Load contact B					
Operand	X0~X17	Y0~Y17	M0~M799	T0~159	C0~C79	D0~D399
	✓	✓	✓	✓	✓	—

Explanation: The LDI command is used for contact B starting at the left busbar or contact B starting at a contact circuit block; its function is to save current content and save the acquired contact status in the cumulative register.

Example: Ladder diagram:

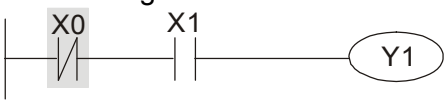

Command code:		Description:
LDI	**X0**	Load Contact B of X0
AND	X1	Create series connection to contact A of X1
OUT	Y1	Drive Y1 coil

Command	Function					
AND	Connect contact A in series					
Operand	X0~X17	Y0~Y17	M0~M799	T0~159	C0~C79	D0~D399
	✓	✓	✓	✓	✓	—

Explanation: The AND command is used to create a series connection to contact A; first reads current status of the designated series contact and logical operation results before contact in order to perform "AND" operation; saves results in cumulative register.

Example: Ladder diagram:

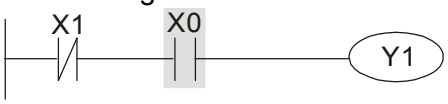

Command code:		Description:
LDI	X1	Load Contact B of X1
AND	**X0**	Create series connection to contact A of X0
OUT	Y1	Drive Y1 coil

Command	Function					
ANI	Connect contact B in series					
Operand	X0~X17	Y0~Y17	M0~M799	T0~159	C0~C79	D0~D399
	✓	✓	✓	✓	✓	—

Explanation

The ANI command is used to create a series connection to contact B; its function is to first read current status of the designated series contact and logical operation results before contact in order to perform "AND" operation; saves results in cumulative register.

Example

Ladder diagram:

Command code:		Description:
LD	X1	Load Contact A of X1
ANI	**X0**	Create series connection to contact B of X0
OUT	Y1	Drive Y1 coil

Command	Function					
OR	Connect contact A in parallel					
Operand	X0~X17	Y0~Y17	M0~M799	T0~159	C0~C79	D0~D399
	✓	✓	✓	✓	✓	—

Explanation

The OR command is used to establish a parallel connection to contact a; its function is to first read current status of the designated series contact and logical operation results before contact in order to perform "OR" operation; saves results in cumulative register.

Example

Ladder diagram:

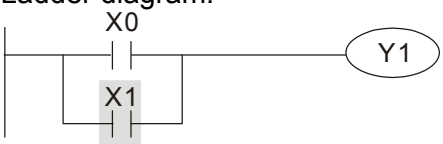

Command code:		Description:
LD	X0	Load Contact A of X0
OR	**X1**	Create series connection to contact A of X1
OUT	Y1	Drive Y1 coil

Command	Function					
ORI	Connect contact B in parallel					
Operand	X0~X17	Y0~Y17	M0~M799	T0~159	C0~C79	D0~D399
	✓	✓	✓	✓	✓	—

Explanation

The ORI command is used to establish a parallel connection to contact B; its function is to first read current status of the designated series contact and logical operation results before contact in order to perform "OR" operation; saves results in cumulative register.

Example

Ladder diagram:

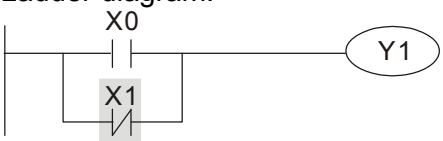

Command code:		Description:
LD	X0	Load Contact A of X0
ORI	**X1**	Create series connection to contact B of X1
OUT	Y1	Drive Y1 coil

Command	Function
ANB	Series circuit block
Operand	N/A

Explanation: ANB performs an "AND" operation on the previously saved logic results and the current cumulative register content.

Example: Ladder diagram:

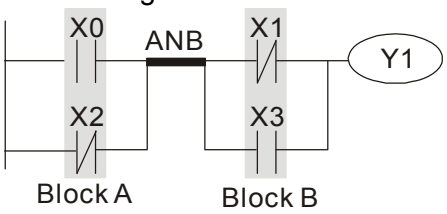

Command code:		Description:
LD	X0	Load Contact A of X0
ORI	X2	Establish parallel connection to contact B of X2
LDI	X1	Load Contact B of X1
OR	X3	Establish parallel connection to contact A of X3
ANB		Series circuit block
OUT	Y1	Drive Y1 coil

Command	Function
ORB	Parallel circuit block
Operand	N/A

Explanation: ORB performs an "OR" operation on the previously saved logic results and the current cumulative register content.

Example: Ladder diagram:

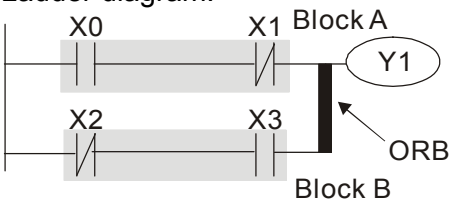

Command code:		Description:
LD	X0	Load Contact A of X0
ANI	X1	Establish parallel connection to contact B of X1
LDI	X2	Load Contact B of X2
AND	X3	Establish parallel connection to contact A of X3
ORB		Parallel circuit block
OUT	Y1	Drive Y1 coil

Command	Function
MPS	Save to stack
Operand	N/A

Explanation: Save current content of cumulative register to the stack. (Add one to stack pointer)

Command	Function
MRD	Read stack (pointer does not change)
Operand	N/A

Explanation: Reads stack content and saves to cumulative register. (Stack pointer does not change)

Command	Function
MPP	Read stack
Operand	N/A

Explanation: Retrieves result of previously-save logical operation from the stack, and saves to cumulative register. (Subtract one from stack pointer)

Example: Ladder diagram:

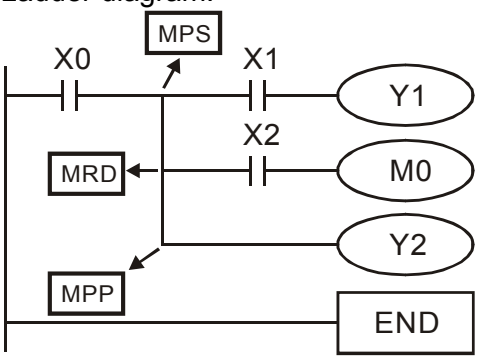

Command code:		Description:
LD	X0	Load Contact A of X0
MPS		Save to stack
AND	X1	Create series connection to contact A of X1
OUT	Y1	Drive Y1 coil
MRD		Read stack (pointer does not change)
AND	X2	Create series connection to contact A of X2
OUT	M0	Drive M0 coil
MPP		Read stack
OUT	Y2	Drive Y2 coil
END		Program conclusion

Command	Function					
OUT	Drive coil					
Operand	X0~X17	Y0~Y17	M0~M799	T0~159	C0~C79	D0~D399
	—	✓	✓	—	—	—

Explanation: Outputs result of logical operation before OUT command to the designated element.
Coil contact action:

Result:	Out command		
	Coil	Access Point:	
		Contact A (NO)	Contact B (NC)
FALSE	Off	Not conducting	Conducting
TRUE	On	Conducting	Not conducting

Example: Ladder diagram:

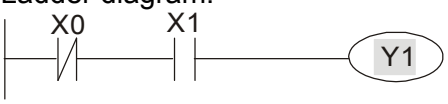

Command code:		Description:
LD	X0	Load Contact B of X0
AND	X1	Establish parallel connection to contact A of X1
OUT	**Y1**	Drive Y1 coil

Command	Function					
SET	Action continues (ON)					
Operand	X0~X17	Y0~Y17	M0~M799	T0~159	C0~C79	D0~D399
	—	✓	✓	—	—	—

Explanation: When the SET command is driven, the designated element will be set as On, and will be maintained in an On state, regardless of whether the SET command is still driven. The RST command can be used to set the element as Off.

Example: Ladder diagram:

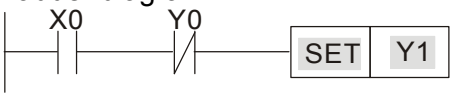

Command code:		Description:
LD	X0	Load Contact A of X0
AN	Y0	Establish parallel connection to contact B of Y0
SET	**Y1**	Action continues (ON)

Command	Function					
RST	Clear contact or register					
Operand	X0~X17	Y0~Y17	M0~M799	T0~159	C0~C79	D0~D399
	—	✓	✓	✓	✓	✓

Explanation

When the RST command is driven, the action of the designated element will be as follows:

Element	Mode
Y, M	Both coil and contact will be set as Off.
T, C	The current timing or count value will be set as 0, and both the coil and contact ill be set as Off.
D	The content value will be set as 0.

If the RST command has not been executed, the status of the designated element will remain unchanged.

Example

Ladder diagram:

Command code:		Description:
LD	X0	Load Contact A of X0
RST	**Y5**	Clear contact or register

Command	Function	
TMR	16-bit timer	
Operand	T-K	T0~T159，K0~K32,767
	T-D	T0~T159，D0~D399

Explanation

When the TMR command is executed, the designated timer coil will be electrified, and the timer will begin timing. The contact's action will be as follows when the timing value reaches the designated set value (timing value >= set value):

NO (Normally Open) contact	Closed
NC (Normally Close) contact	Open

If the RST command has not been executed, the status of the designated element will remain unchanged.

Example

Ladder diagram:

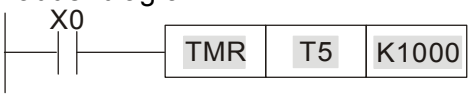

Command code:		Description:
LD	X0	Load Contact A of X0
TMR	T5 K1000	T5 timer Set value as K1000

Command	Function	
CNT	16-bit counter	
Operand	C-K	C0~C79，K0~K32,767
	C-D	C0~C79，D0~D399

Explanation

When the CNT command is executed from Off→On, this indicates that the designated counter coil goes from no power → electrified, and 1 will be added to the counter's count value; when the count reaches the designated value (count value = set value), the contact will have the following action:

NO (Normally Open) contact	Closed
NC (Normally Close) contact	Open

After the count value has been reached, the contact and count value will both remain unchanged even if there is continued count pulse input. Please use the RST command if you wish to restart or clear the count.

Example

Ladder diagram:

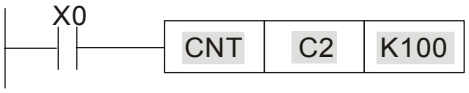

Command code:		Description:
LD	X0	Load Contact A of X0
CNT	**C2 K100**	C2counter Set value as K100

Command	Function
MC/MCR	Connect/release a common series contact
Operand	N0~N7

Explanation

MC is the main control initiation command, and any commands between MC and MCR will be executed normally. When the MC command is Off, any commands between MC and MCR will act as follows:

Determination of commands	Description
Ordinary timer	The timing value will revert to 0, the coil will lose power, and the contact will not operate
Counter	The coil will lose power, and the count value and contact will stay in their current state
Coil driven by OUT command	None receive power
Elements driven by SET, RST commands	Will remain in their current state
Applications commands	None are actuated

MCR is the main control stop command, and is placed at the end of the main control program. There may not be any contact commands before the MCR command.
The MC-MCR main control program commands support a nested program structure with a maximum only 8 levels; use in the order N0-N7, please refer to the following program:

Example

Ladder diagram:

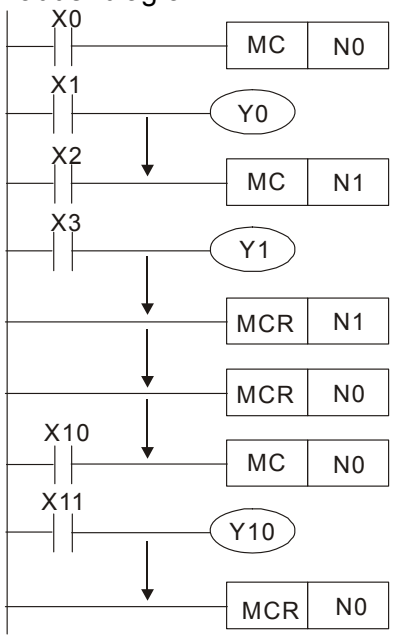

Command code:		Description:
LD	X0	Load Contact A of X0
MC	**N0**	Connection of N0 common series contact
LD	X1	Load Contact A of X1
OUT	Y0	Drive Y0 coil
:		
LD	X2	Load Contact A of X2
MC	**N1**	Connection of N1 common series contact
LD	X3	Load Contact A of X3
OUT	Y1	Drive Y1 coil
:		
MCR	**N1**	Release N1 common series contact
:		
MCR	**N0**	Release N0 common series contact
:		
LD	X10	Load Contact A of X10
MC	**N0**	Connection of N0 common series contact
LD	X11	Load Contact A of X11
OUT	Y10	Drive Y10 coil
:		
MCR	**N0**	Release N0 common series contact

Command	Function					
LDP	Start of forward edge detection action					
Operand	X0~X17	Y0~Y17	M0~M799	T0~159	C0~C79	D0~D399
	✓	✓	✓	✓	✓	—

Explanation

The LDP command has the same usage as LD, but its action is different; its function is to save current content, while also saving the detected state of the rising edge of the contact to the cumulative register.

Example

Ladder diagram:

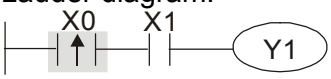

Command code:		Description:
LDP	**X0**	Start of X0 forward edge detection action
AND	X1	Create series connection to contact A of X1
OUT	Y1	Drive Y1 coil

Remark

Please refer to the function specifications table for each device in series for the scope of usage of each operand.
A rising edge contact will be TRUE after power is turned on if the rising edge contact is On before power is turned on to the PLC.

Command	Function					
LDF	Start of reverse edge detection action					
Operand	X0~X17	Y0~Y17	M0~M799	T0~159	C0~C79	D0~D399
	✓	✓	✓	✓	✓	—

Explanation

The LDF command has the same usage as LD, but its action is different; its function is to save current content while also saving the detected state of the falling edge of the contact to the cumulative register.

Example

Ladder diagram:

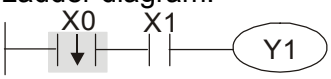

Command code:		Description:
LDF	**X0**	Start of X0 reverse edge detection action
AND	X1	Create series connection to contact A of X1
OUT	Y1	Drive Y1 coil

Command	Function					
ANDP	Forward edge detection series connection					
Operand	X0~X17	Y0~Y17	M0~M799	T0~159	C0~C79	D0~D399
	✓	✓	✓	✓	✓	—

Explanation

The ANDP command used for a contact rising edge detection series connection.

Example

Ladder diagram:

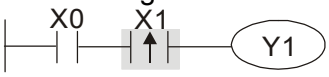

Command code:		Description:
LD	X0	Load Contact A of X0
ANDP	**X1**	X1 Forward edge detection series connection
OUT	Y1	Drive Y1 coil

Command	Function					
ANDF	Reverse edge detection series connection					
Operand	X0~X17	Y0~Y17	M0~M799	T0~159	C0~C79	D0~D399
	✓	✓	✓	✓	✓	—

Explanation The ANDF command is used for a contact falling edge detection series connection.

Example

Ladder diagram:

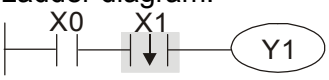

Command code:		Description:
LD	X0	Load Contact A of X0
ANDF	**X1**	X1 Reverse edge detection series connection
OUT	Y1	Drive Y1 coil

Command	Function					
ORP	Forward edge detection parallel connection					
Operand	X0~X17	Y0~Y17	M0~M799	T0~159	C0~C79	D0~D399
	✓	✓	✓	✓	✓	—

Explanation The ORP command is used for a contact rising edge detection parallel connection.

Example

Ladder diagram:

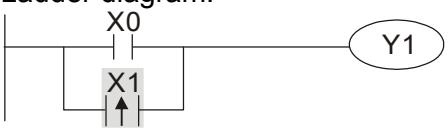

Command code:		Description:
LD	X0	Load Contact A of X0
ORP	**X1**	X1 Forward edge detection parallel connection
OUT	Y1	Drive Y1 coil

Command	Function					
ORF	Reverse edge detection parallel connection					
Operand	X0~X17	Y0~Y17	M0~M799	T0~159	C0~C79	D0~D399
	✓	✓	✓	✓	✓	—

Explanation The ORF command is used for contact falling edge detection parallel connection.

Example

Ladder diagram:

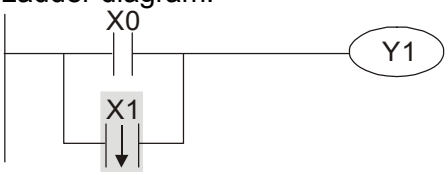

Command code:		Description:
LD	X0	Load Contact A of X0
ORF	**X1**	X1 Reverse edge detection parallel connection
OUT	Y1	Drive Y1 coil

Command	Function					
PLS	Upper differential output					
Operand	X0~X17	Y0~Y17	M0~M799	T0~159	C0~C79	D0~D399
	–	✓	✓	–	–	–

Explanation

Upper differential output commands. When X0=Off→On (positive edge-triggered), the PLS command will be executed, and M0 will send one pulse, with a pulse length consisting of one scanning period.

Example

Ladder diagram:

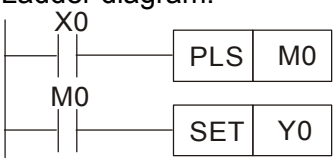

Time sequence diagram:

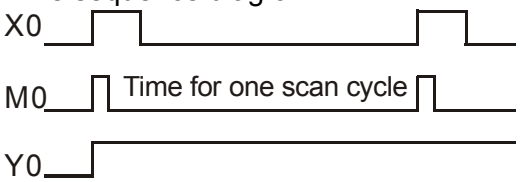

Command code:		Description:
LD	X0	Load Contact A of X0
PLS	**M0**	M0 Upper differential output
LD	M0	Load Contact A of M0
SET	Y0	Y0 Action continues (ON)

Command	Function					
PLF	Lower differential output					
Operand	X0~X17	Y0~Y17	M0~M799	T0~159	C0~C79	D0~D399
	–	✓	✓	–	–	–

Explanation

Lower differential output command. When X0= On→Off (negative edge-triggered), the PLF command will be executed, and M0 will send one pulse, with pulse length consisting of one scanning period.

Example

Ladder diagram:

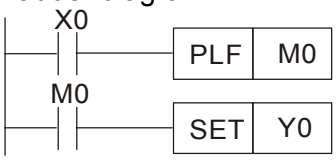

Time sequence diagram:

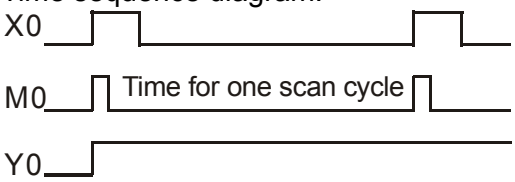

Command code:		Description:
LD	X0	Load Contact A of X0
PLF	**M0**	M0 Lower differential output
LD	M0	Load Contact A of M0
SET	Y0	Y0 Action continues (ON)

Command	Function
END	Program conclusion
Operand	N/A

Explanation

An END command must be added to the end of a ladder diagram program or command program. The PLC will scan from address 0 to the END command, and will return to address 0 and begins scanning again after execution.

Command	Function
NOP	No action
Operand	N/A

Explanation

The command NOP does not perform any operation in the program. Because execution of this command will retain the original logical operation results, it can be used in the following situation: the NOP command can be used instead of a command that is deleted without changing the program length.

Example

Ladder diagram:

NOP command will be simplified and not displayed when the ladder diagram is displayed.

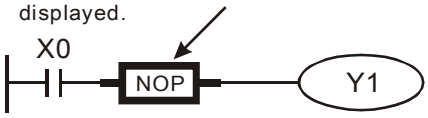

Command code:		Description:
LD	X0	Load Contact B of X0
NOP		No action
OUT	Y1	Drive Y1 coil

Command	Function
INV	Inverse of operation results
Operand	N/A

Explanation

Saves the result of the logic inversion operation prior to the INV command in the cumulative register.

Example

Ladder diagram:

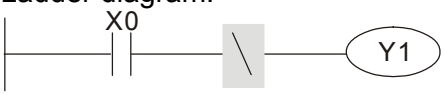

Command code:		Description:
LD	X0	Load Contact A of X0
INV		Inverse of operation results
OUT	Y1	Drive Y1 coil

Command	Function
P	Index
Operand	P0~P255

Explanation

Pointer P is used to subprogram call command API 01 CALL. Use does not require starting from zero, but the number cannot be used repeatedly, otherwise an unpredictable error will occur.

Example

Ladder diagram:

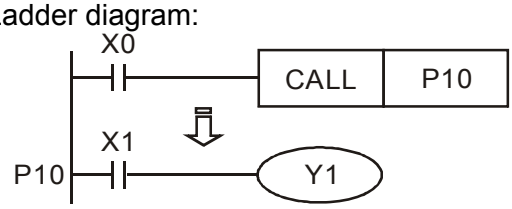

Command code:		Description:
LD	X0	Load Contact A of X0
CALL	P10	Call command CALL to P10
:		
P10		Pointer P10
LD	X1	Load Contact A of X1
OUT	Y1	Drive Y1 coil

16-6-3 Overview of application commands

Classification	API	Command code		P command	Function	STEPS	
		16 bit	32 bit			16bit	32bit
Circuit control	01	CALL	-	✓	Call subprogram	3	-
	2	SRET	-	-	Conclusion of subprogram	1	-
	06	FEND	-	-	Conclusion a main program	1	-
Send comparison	10	CMP	DCMP	✓	Compares set output	7	13
	11	ZCP	DZCP	✓	Range comparison	9	17
	12	MOV	DMOV	✓	Data movement	5	9
	15	BMOV	–	✓	Send all	7	–
Four logical operations	20	ADD	DADD	✓	BIN addition	7	13
	21	SUB	DSUB	✓	BIN subtraction	7	13
	22	MUL	DMUL	✓	BIN multiplication	7	13
	23	DIV	DDIV	✓	BIN division	7	13
	24	INC	DINC	✓	BIN add one	3	5
	25	DEC	DDEC	✓	BIN subtract one	3	5
Rotational displacement	30	ROR	DROR	✓	Right rotation	5	–
	31	ROL	DROL	✓	Left rotation	5	–
Data Process	40	ZRST	–	✓	Clear range	5	-
	49	–	DFLT	✓	BIN whole number → binary floating point number transformation	-	9
communication	150	MODRW	–	✓	MODBUS read/write	7	–
Floating point operation	110	–	DECMP	✓	Comparison of binary floating point numbers	–	13
	111	–	DEZCP	✓	Comparison of binary floating point number range	–	17
	116	–	DRAD	✓	Angle → Diameter	–	9
	117	–	DDEG	✓	Diameter → angle	–	9
	120	–	DEADD	✓	Binary floating point number addition	–	13
	121	–	DESUB	✓	Binary floating point number subtraction	–	13
	122	–	DEMUL	✓	Binary floating point number multiplication	–	13
	123	–	DEDIV	✓	Binary floating point number division	–	13
	124	–	DEXP	✓	Binary floating point number obtain exponent	–	9
	125	–	DLN	✓	Binary floating point number obtain logarithm	–	9
	127	–	DESQR	✓	Binary floating point number find square root	–	9
	129	–	DINT	✓	Binary floating point number → BIN whole number transformation	–	9
	130	–	DSIN	✓	Binary floating point number SIN operation	–	9
	131	–	DCOS	✓	Binary floating point number COS operation	–	9
	132	–	DTAN	✓	Binary floating point number TAN operation	–	9
	133	–	DASIN	✓	Binary floating point number ASIN operation	–	9
	134	–	DACOS	✓	Binary floating point number ACOS operation	–	9
	135	–	DATAN	✓	Binary floating point number ATAN operation	–	9

Classification	API	Command code		P command	Function	STEPS	
		16 bit	32 bit			16bit	32bit
Floating point operation	136	–	DSINH	✓	Binary floating point number SINH operation	–	9
	137	–	DCOSH	✓	Binary floating point number COSH operation	–	9
	138	–	DTANH	✓	Binary floating point number TANH operation	–	9
Calendar	160	TCMP	–	✓	Compare calendar data	11	–
	161	TZCP	–	✓	Compare calendar data range	9	–
	162	TADD	–	✓	Calendar data addition	7	–
	163	TSUB	–	✓	Calendar data subtraction	7	–
	166	TRD	–	✓	Calendar data read	3	–
GRAY code	170	GRY	DGRY	✓	BIN→GRY code transformation	5	9
	171	GBIN	DGBIN	✓	GRY code →BIN transformation	5	9
Contact form logical operation	215	LD&	DLD&	-	Contact form logical operation LD#	5	9
	216	LD|	DLD|	-	Contact form logical operation LD#	5	9
	217	LD^	DLD^	-	Contact form logical operation LD#	5	9
	218	AND&	DAND&	-	Contact form logical operation AND#	5	9
	219	AND|	DAND|	-	Contact form logical operation AND#	5	9
	220	AND^	DAND^	-	Contact form logical operation AND#	5	9
	221	OR&	DOR&	-	Contact form logical operation OR#	5	9
	222	OR|	DOR|	-	Contact form logical operation OR#	5	9
	223	OR^	DOR^	-	Contact form logical operation OR#	5	9
Contact form compare command	224	LD＝	DLD＝	-	Contact form compare LD*	5	9
	225	LD＞	DLD＞	-	Contact form compare LD*	5	9
	226	LD＜	DLD＜	-	Contact form compare LD*	5	9
	228	LD＜＞	DLD＜＞	-	Contact form compare LD*	5	9
	229	LD＜＝	DLD＜＝	-	Contact form compare LD*	5	9
	230	LD＞＝	DLD＞＝	-	Contact form compare LD*	5	9
	232	AND＝	DAND＝	-	Contact form compare AND*	5	9
	233	AND＞	DAND＞	-	Contact form compare AND*	5	9
	234	AND＜	DAND＜	-	Contact form compare AND*	5	9
	236	AND＜＞	DAND＜＞	-	Contact form compare AND*	5	9
	237	AND＜＝	DAND＜＝	-	Contact form compare AND*	5	9
	238	AND＞＝	DAND＞＝	-	Contact form compare AND*	5	9
	240	OR＝	DOR＝	-	Contact form compare OR*	5	9
	241	OR＞	DOR＞	-	Contact form compare OR*	5	9
	242	OR＜	DOR＜	-	Contact form compare OR*	5	9
	244	OR＜＞	DOR＜＞	-	Contact form compare OR*	5	9
	245	OR＜＝	DOR＜＝	-	Contact form compare OR*	5	9
	246	OR＞＝	DOR＞＝	-	Contact form compare OR*	5	9

Classification	API	Command code		P command	Function	STEPS	
		16 bit	32 bit			16bit	32bit
Floating point contact form	275	-	FLD＝	-	Floating point number contact form compare LD*	-	9
	276	-	FLD＞	-	Floating point number contact form compare LD*	-	9
	277	-	FLD＜	-	Floating point number contact form compare LD*	-	9
Compare command	278	-	FLD＜＞	-	Floating point number contact form compare LD*	-	9
	279	-	FLD＜＝	-	Floating point number contact form compare LD*	-	9
	280	-	FLD＞＝	-	Floating point number contact form compare LD*	-	9
	281	-	FAND＝	-	Floating point number contact form compare AND*	-	9
	282	-	FAND＞	-	Floating point number contact form compare AND*	-	9
	283	-	FAND＜	-	Floating point number contact form compare AND*	-	9
	284	-	FAND＜＞	-	Floating point number contact form compare AND*	-	9
	285	-	FAND＜＝	-	Floating point number contact form compare AND*	-	9
	286	-	FAND＞＝	-	Floating point number contact form compare AND*	-	9
	287	-	FOR＝	-	Floating point number contact form compare OR*	-	9
	288	-	FOR＞	-	Floating point number contact form compare OR*	-	9
	289	-	FOR＜	-	Floating point number contact form compare OR*	-	9
	290	-	FOR＜＞	-	Floating point number contact form compare OR*	-	9
	291	-	FOR＜＝	-	Floating point number contact form compare OR*	-	9
	292	-	FOR＞＝	-	Floating point number contact form compare OR*	-	9
Drive special command	139	RPR	–	✓	Read servo parameter	5	–
	140	WPR	–	✓	Write servo parameter	5	–
	141	FPID	–	✓	Drive PID control mode	9	–
	142	FREQ	–	✓	Drive torque control mode	7	–
	262	–	DPOS	✓	Set target	-	5
	263	TORQ	–	✓	Set target torque	5	-
	261	CANRX	–	✓	Read CANopen slave station data	9	-
	264	CANTX	–	✓	Write CANopen slave station data	9	-
	265	CANFLS	–	✓	Refresh special D corresponding to CANopen	3	-
	320	ICOMR	DICOMR	✓	Internal communications read	9	17
	321	ICOMW	DICOMW	✓	Internal communications write	9	17

16-6-4 Detailed explanation of applications commands

API 01		**CALL**	P	S	Call subprogram

Bit device			Word device							
X	Y	M	K	H	KnX	KnY	KnM	T	C	D

Notes on operand usage:
The S operand can designate P
MS300 series device: The S operand can designate P0-P63

16-bit command (3 STEP)			
CALL	Continuous execution type	CALLP	Pulse execution type
32-bit command			
—	—	—	—

Flag signal: none

Explanation

- **S**: Call subprogram pointer.
- Write the subprogram after the FEND command.
- The subprogram must end after the SRET command.
- Refer to the FEND command explanation and sample content for detailed command functions.

API 02		**SRET**	P	–	Conclusion of subprogram

Bit device			Word device							
X	Y	M	K	H	KnX	KnY	KnM	T	C	D

Notes on operand usage:
No operand
A contact-driven command is not needed

16-bit command (1 STEP)			
FEND	Continuous execution type	—	—
32-bit command			
—	—	—	—

Flag signal: none

Explanation

- A contact-driven command is not needed. Automatically returns next command after CALL command
- Indicates end of subprogram. After end of subprogram, SRET returns to main program, and executes next command after the original call subprogram CALL command.
- Refer to the FEND command explanation and sample content for detailed command functions.

API 06		**FEND**		–	Conclusion a main program

	Bit device			Word device							
	X	Y	M	K	H	KnX	KnY	KnM	T	C	D

Notes on operand usage:
No operand
A contact-driven command is not needed

16-bit command (1 STEP)			
FEND	Continuous execution type	–	–

32-bit command			
–	–	–	–

Flag signal: none

Explanation

- This command indicates the end of the main program. It is the same as the END command when the PLC executes this command.
- The CALL command program must be written after the FEND command, and the SRET command added to the end of the subprogram.
- When using the FEND command, an END command is also needed. However, the END command must be placed at the end, after the main program and subprogram.

CALL command process

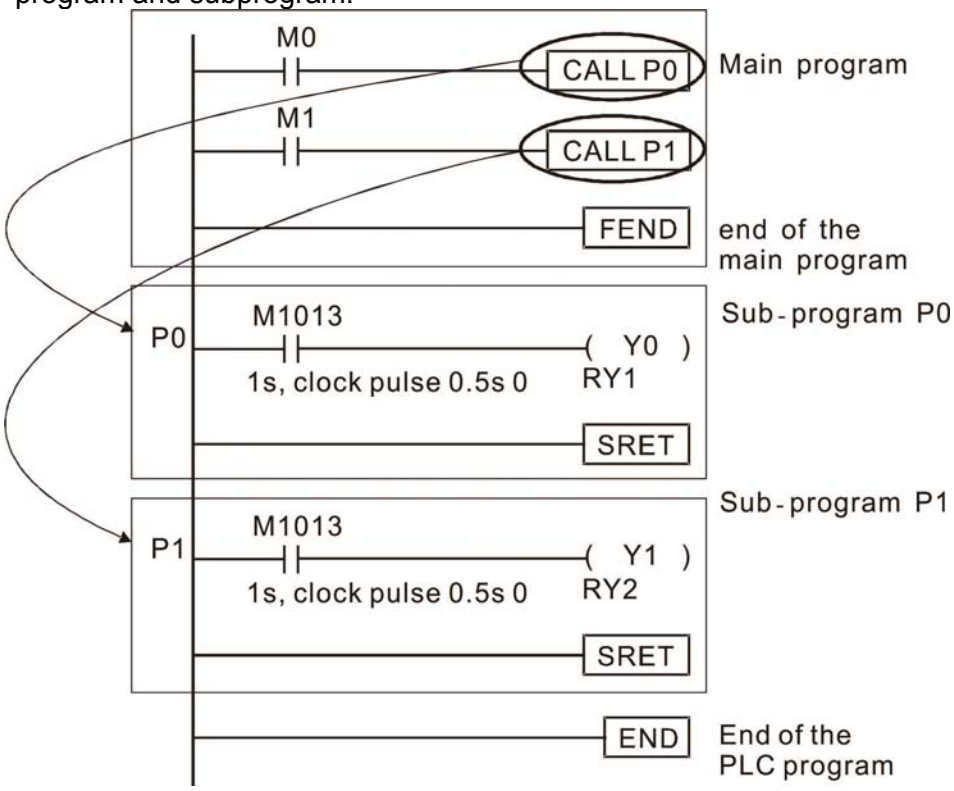

API 10	D	**CMP**	P	(S1) (S2) (D)	Compares set output

	Bit device			Word device							
	X	Y	M	K	H	KnX	KnY	KnM	T	C	D
S1				*	*	*	*	*	*	*	*
S2				*	*	*	*	*	*	*	*
D		*	*								

Notes on operand usage:
The operand D occupies three consecutive points

16-bit command (7 STEP)

CMP	Continuous execution type	CMPP	Pulse execution type

32-bit command (13 STEP)

DCMP	Continuous execution type	DCMPP	Pulse execution type

Flag signal: none

Explanation

- (S1): Compare value 1. (S2): Compare value 2. (D): Results of comparison.
- Compares the size of the content of operand (S1) and (S2); the results of comparison are expressed in (D).
- Size comparison is performed algebraically. All data is compared in the form of numerical binary values. Because this is a 16-bit command, when b15 is 1, this indicates a negative number.

Example

- When the designated device is Y0, it automatically occupies Y0, Y1 and Y2.
- When X10=On, the CMP command executes, and Y0, Y1 or Y2 will be On. When X10=Off, the CMP command will not execute, and the state of Y0, Y1 and Y2 will remain in the state prior to X10=Off.
- If ≥, ≤, or ≠ results are needed, they can be obtained via series/parallel connections of Y0-Y2.

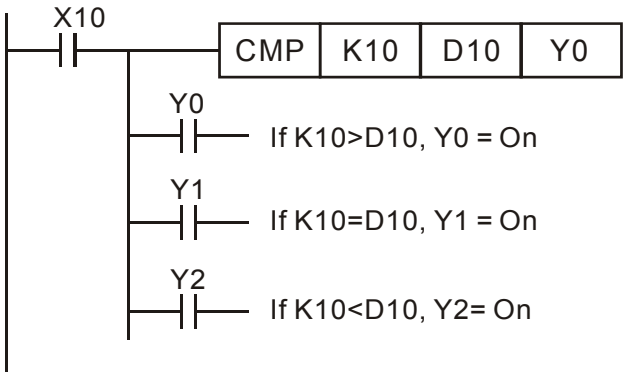

- To clear results of comparison, use the RST or ZRST command.

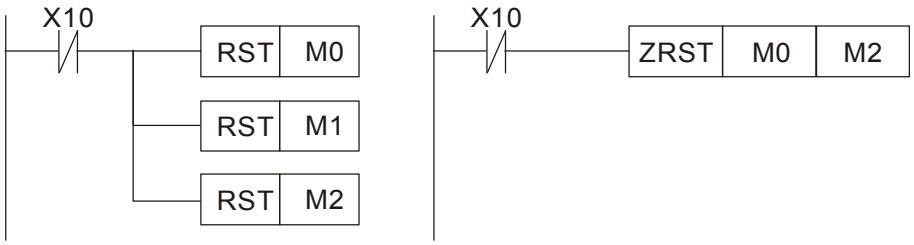

API 11	D	**ZCP**	P	(S1) (S2) (S) (D)	Range comparison

	Bit device			Word device							
	X	Y	M	K	H	KnX	KnY	KnM	T	C	D
S1				*	*	*	*	*	*	*	*
S2				*	*	*	*	*	*	*	*
S				*	*	*	*	*	*	*	*
D		*	*								

Notes on operand usage:
The content value of operand S1 is less than the content value of S2 operand
The operand D occupies three consecutive points

16-bit command (9 STEP)

ZCP	Continuous execution type	ZCPP	Pulse execution type

32-bit command (17 STEP)

DZCP	Continuous execution type	DZCPP	Pulse execution type

Flag signal: none

Explanation

- (S1): Lower limit of range comparison. (S2): Upper limit of range comparison. (S) : Comparative value. (D): Results of comparison.
- When the comparative value (S) is compared with the lower limit (S1) and upper limit (S2), the results of comparison are expressed in (D).
- When lower limit (S1) > upper limit (S2), the command will use the lower limit (S1) to perform comparison with the upper and lower limit.
- Size comparison is performed algebraically. All data is compared in the form of numerical binary values. Because this is a 16-bit command, when b15 is 1, this indicates a negative number.

Example

- When the designated device is M0, it automatically occupies M0, M1 and M2.
- When X0=On, the ZCP command executes, and M0, M1 or M2 will be On. When X0=Off, the ZCP command will not execute, and the state of M0, M1 or M2 will remain in the state prior to X0=Off.
- If ≥, ≤, or ≠ results are needed, they can be obtained via series/parallel connections of M0-M2.

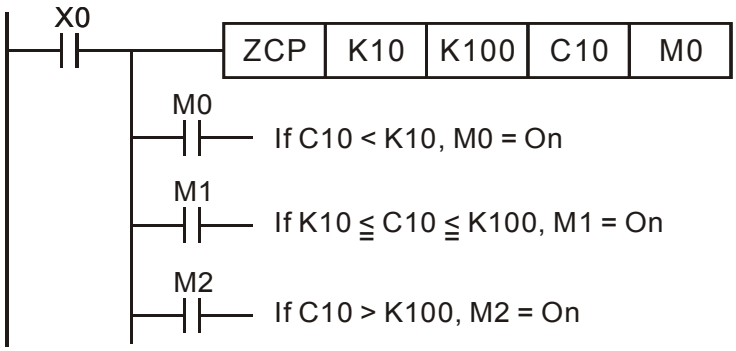

- To clear results of comparison, use the RST or ZRST command.

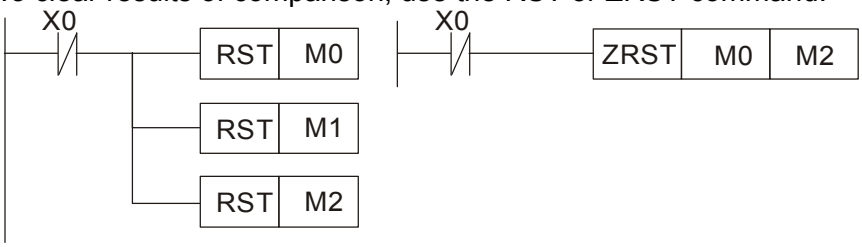

API 12	D	**MOV**	P	(S) (D)	Data movement

	Bit device			Word device							
	X	Y	M	K	H	KnX	KnY	KnM	T	C	D
S				*	*	*	*	*	*	*	*
D							*	*	*	*	*

Notes on operand usage: none

16-bit command (5 STEP)

MOV	Continuous execution type	MOVP	Pulse execution type

32-bit command (9 STEP)

DMOV	Continuous execution type	DMOVP	Pulse execution type

Flag signal:

Explanation

- (S): Data source. (D): Destination of data movement.
- When this command is executed, the content of (S) content will be directly moved to (D). When the command is not executed, the content of (D) will not change.

Example

- When X0=Off, the content of D10 will not change; if X0=On, the value K10 will be sent to data register D10.
- When X1=Off, the content of D10 will not change; if X1=On, the current value of T0 will be sent to data register D10.

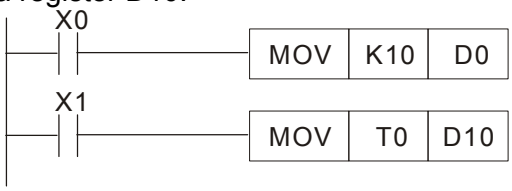

API 15		**BMOV**	P	(S) (D) (n)	Send all

	Bit device			Word device							
	X	Y	M	K	H	KnX	KnY	KnM	T	C	D
S						*	*	*	*	*	*
D							*	*	*	*	*
n				*	*				*	*	

Notes on operand usage:
n operand scope n ＝ 1 to 512

16-bit command (7 STEP)

BMOV	Continuous execution type	BMOVP	Pulse execution type

32-bit command

—	—	—	—

Flag signal: none

Explanation

- (S): Initiate source device. (D): Initiate destination device. (n): Send block length.
- The content of n registers starting from the initial number of the device designated by (S) will be sent to the n registers starting from the initial number of the device designated by (n); if the number of points referred to by n exceeds the range used by that device, only points within the valid range will be sent.

Example 1

- When X10=On, the content of registers D0-D3 will be sent to the four registers D20 to D23.

Example 2

- If the designated bit devices KnX, KnY, and KnM are sent, (S) and (D) must have the same number of nibbles, which implies that n must be identical.

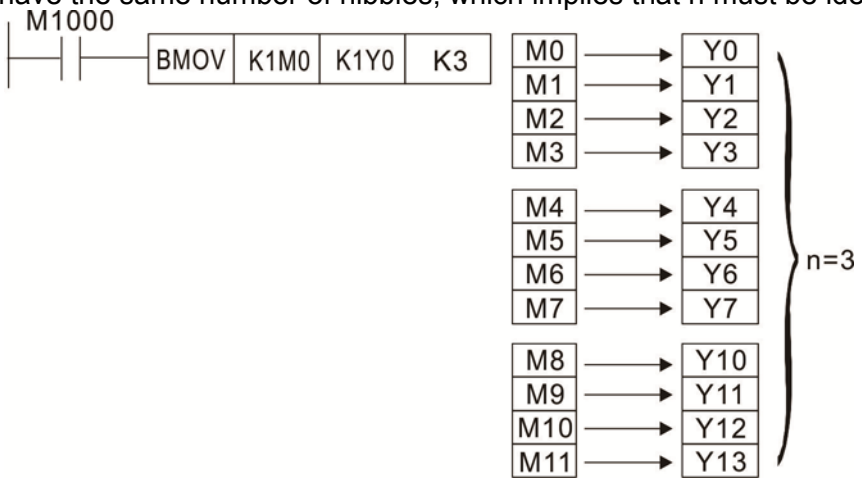

Example 3

- In order to prevent overlap between the transmission addresses of two operands, which would cause confusion, make sure that the addresses designated by the two operands have different sizes, as shown below:

When (S) > (D), send in the order ①→② →③.

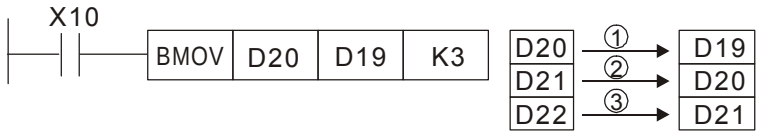

When (S) < (D), send in the order ③→② →①.

API 20	D	**ADD**	P	(S1) (S2) (D)	BIN addition

	Bit device			Word device							
	X	Y	M	K	H	KnX	KnY	KnM	T	C	D
S1				*	*	*	*	*	*	*	*
S2				*	*	*	*	*	*	*	*
D							*	*	*	*	*

Notes on operand usage: none

16-bit command (7 STEP)

ADD	Continuous execution type	ADDP	Pulse execution type

32-bit command (13 STEP)

DADD	Continuous execution type	DADDP	Pulse execution type

Flag signal: M1020 Zero flag
M1021 Borrow flag
M1022 Carry flag
Please refer to the following supplementary explanation

Explanation

- (S1): Augend. (S2): Addend. (D): Sum.
- Using two data sources: The result of adding (S1) and (S2) using the BIN method will be stored in (D).
- The highest bit of any data is symbolized as bit 0 indicating (positive) 1 indicating (negative), enabling the use of algebraic addition operations. (for instance: 3+(-9)=-6)
- Flag changes connected with the addition.

1. When calculation results are 0, the zero flag M1020 will be On.
2. When calculation results are less than –32,768, the borrow flag M1021 will be On.
3. When calculation results are greater than 32,767, the carry flag M1022 will be On.

Example

- 16-bit BIN addition: When X0=On, the result of the content of addend D0 plus the content of augend D10 will exist in the content of D20.

Remark

- Relationship between flag actions and negative/positive numbers:

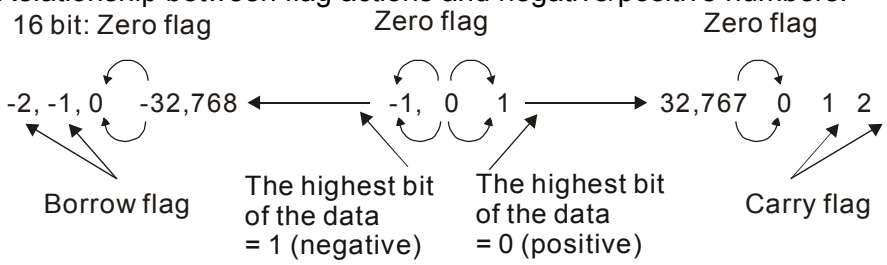

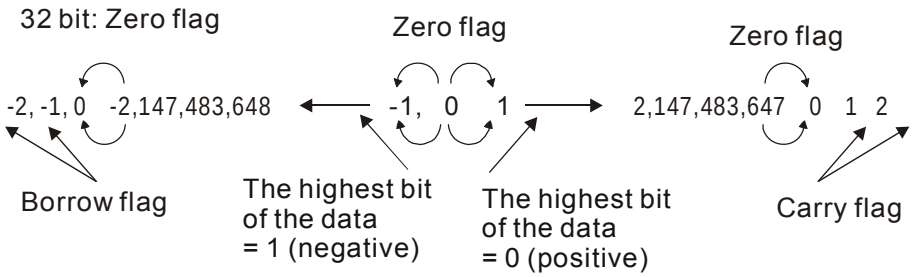

API 21	D	**SUB**	P	(S1) (S2) (D)	BIN subtraction

	Bit device			Word device							
	X	Y	M	K	H	KnX	KnY	KnM	T	C	D
S1				*	*	*	*	*	*	*	*
S2				*	*	*	*	*	*	*	*
D							*	*	*	*	*

Notes on operand usage: none

16-bit command (7 STEP)

SUB	Continuous execution type	SUBP	Pulse execution type

32-bit command (13 STEP)

DSUB	Continuous execution type	DSUBP	Pulse execution type

Flag signal: M1020 Zero flag
M1021 Borrow flag
M1022 Carry flag
Please refer to the following supplementary explanation

Explanation

- (S1): Minuend. (S2): Subtrahend. (D): Difference.
- Using two data sources: The result of subtraction of (S1) and (S2) using the BIN method is stored in (D).
- The highest bit of any data is symbolized as bit 0 indicating (positive) 1 indicating (negative), enabling the use of algebraic subtraction operations.
- Flag changes connected with subtraction.

1. When calculation results are 0, the zero flag M1020 will be On.
2. When calculation results are less than –32,768, the borrow flag M1021 will be On.
3. When calculation results are greater than 32,767, the carry flag M1022 will be On.

Example

- 16-bit BIN subtraction: When X0=On, the content of D10 is subtracted from the content of D0, and the difference is stored in D20.

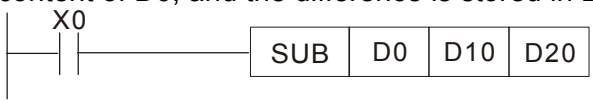

API 22	D	**MUL**	P	(S1) (S2) (D)	BIN multiplication

	Bit device			Word device							
	X	Y	M	K	H	KnX	KnY	KnM	T	C	D
S1				*	*	*	*	*	*	*	*
S2				*	*	*	*	*	*	*	*
D							*	*	*	*	*

Notes on operand usage:
The 16-bit command operand D will occupy 2 consecutive points

16-bit command (7 STEP)

MUL	Continuous execution type	MULP	Pulse execution type

32-bit command (13 STEP)

DMUL	Continuous execution type	DMULP	Pulse execution type

Flag signal: none

Explanation

- (S1): Multiplicand. (S2): Multiplier. (D): Product.
- Using two data sources: When (S1) and (S2) are multiplied using the BIN method, the product is stored in (D).

16-bit BIN multiplication operation:

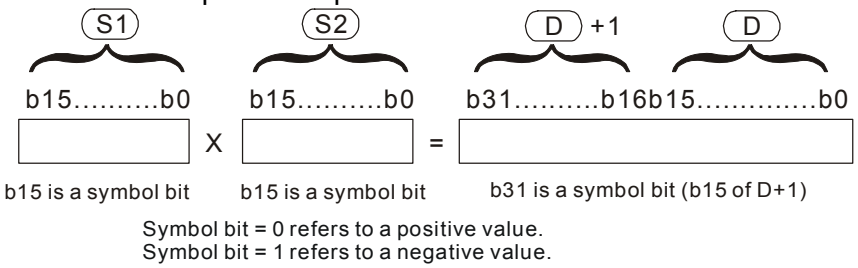

When (D) is a bit device, K1-K4 can be designated as a hexadecimal number, which will occupy 2 consecutive units.

Example

- When 16-bit DO is multiplied by 16-bit D10, the result will be a 32-bit product; the upper 16 bits will be stored in D21, and the lower 16 bits will be stored in D20. Whether the bit at the farthest left is Off or On will indicate the sign of the result.

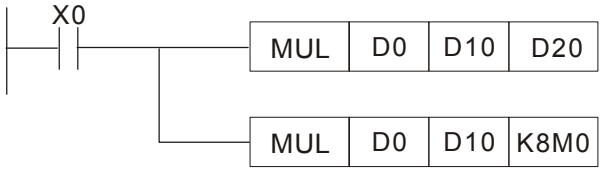

API 23	D	**DIV**	P	(S1) (S2) (D)	BIN division

	Bit device			Word device							
	X	Y	M	K	H	KnX	KnY	KnM	T	C	D
S1				*	*	*	*	*	*	*	*
S2				*	*	*	*	*	*	*	*
D							*	*	*	*	*

Notes on operand usage:
The 16-bit command operand D will occupy 2 consecutive points

16-bit command (7 STEP)

DIV	Continuous execution type	DIVP	Pulse execution type

32-bit command (13 STEP)

DDIV	Continuous execution type	DDIVP	Pulse execution type

Flag signal: none

Explanation

- (S1): Dividend. (S2): Divisor. (D): Quotient and remainder.
- Using two data sources: The quotient and remainder will be stored in (D) when (S1) and (S2) are subjected to division using the BIN method. The sign bit for (S1), (S2) and (D) must be kept in mind when performing a 16-bit operation.

16-bit BIN division:

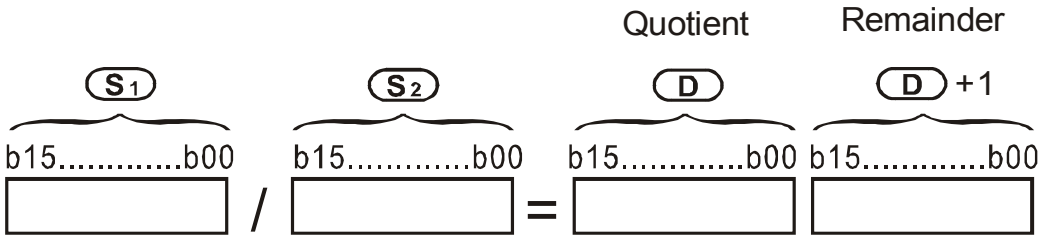

If (D) is a bit device, K1-K4 can be designated 16 bits, which will occupy 2 consecutive units and yield the quotient and remainder.

Example

- When X0=On, the quotient resulting from division of dividend D0 by divisor D10 will be placed in D20, and the remainder will be placed in D21. Whether the highest bit is Off or On will indicate the sign of the result.

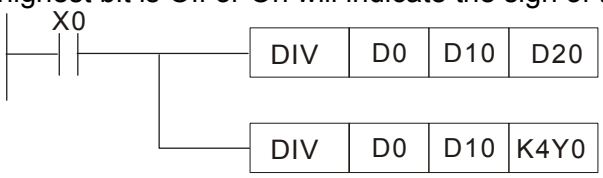

API 24	D	**INC**	P	(D)	BIN add one

	Bit device			Word device							
	X	Y	M	K	H	KnX	KnY	KnM	T	C	D
D							*	*	*	*	*

Notes on operand usage: none

16-bit command (3 STEP)

INC	Continuous execution type	INCP	Pulse execution type

32-bit command (5 STEP)

DINC	Continuous execution type	DINCP	Pulse execution type

Flag signal: none

Explanation

- (D): Destination device.
- If a command is not the pulse execution type, when the command is executed, the program will add 1 to the content of device (D) for each scanning cycle.
- This command is ordinarily used as a pulse execution type command (INCP).
- During 16-bit operation, 32,767 +1 will change the value to -32,768. During 32 bit operation, 2,147,483,647 +1 will change the value to -2,147,483,648.

Example

- When X0=Off→On, 1 is automatically added to the content of D0.

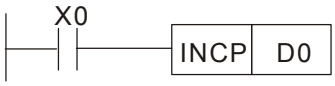

API 25	D	**DEC**	P	(D)	BIN subtract one

	Bit device			Word device							
	X	Y	M	K	H	KnX	KnY	KnM	T	C	D
D				*	*	*	*	*			

Notes on operand usage: none

16-bit command (3 STEP)

DEC	Continuous execution type	DECP	Pulse execution type

32-bit command (5 STEP)

DDEC	Continuous execution type	DDECP	Pulse execution type

Flag signal: none

Explanation

- (D): Destination device.
- If a command is not the pulse execution type, when the command is executed, the program will add 1 to the content of device (D) for each scanning cycle.
- This command is ordinarily used as a pulse execution type command (DECP).
- During 16-bit operation, -32,768 -1 will change the value to 32,767. During 32 bit operation, -2,147,483,648 -1 will change the value to -2,147,483,647.

Example

- When X0=Off→On, 1 is automatically subtracted from the content of D0.

API 30	D	ROR	P	D n	Right rotation

	Bit device			Word device							
	X	Y	M	K	H	KnX	KnY	KnM	T	C	D
D							*	*	*	*	*
n				*	*						

Notes on operand usage:
Only K4 (16-bit) will be valid if the operand D is designated as KnY or KnM.
n operand n=K1-K16 (16-bit)

16-bit command (5 STEP)

ROR	Continuous execution type	RORP	Pulse execution type

32-bit command (9 STEP)

DROR	Continuous execution type	DRORP	Pulse execution type

Flag signal: M1022 Carry flag

Explanation

- D: Device to be rotated. n: Number of bits for one rotation.
- Rotates the device designated by D to the right n bits.
- This command is ordinarily used as a pulse execution type command (RORP).

Example

- When X0=Off→On, 4 of the 16 bits in D10 specify a right rotation; the content of the bit indicated with * (see figure below) will be sent to the carry flag signal M1022.

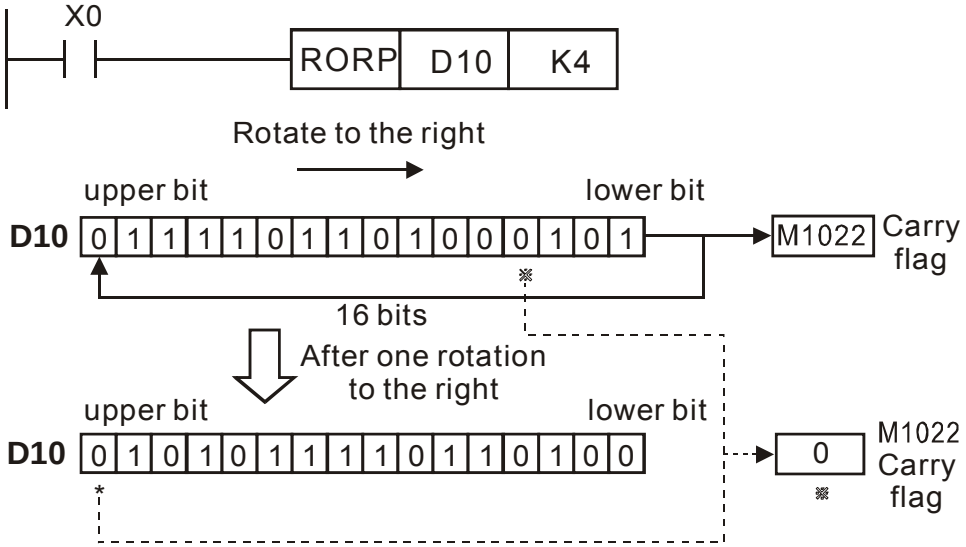

API 31	D	**ROL**	P	(D) (n)	Left rotation

	Bit device			Word device							
	X	Y	M	K	H	KnX	KnY	KnM	T	C	D
D							*	*	*	*	*
n				*	*						

Notes on operand usage:
Only K4 (16-bit) will be valid if the operand D is designated as KnY or KnM.
n operand n=1 to 16 (16-bit)

16-bit command (5 STEP)

ROL	Continuous execution type	ROLP	Pulse execution type

32-bit command (9 STEP)

DROL	Continuous execution type	DROLP	Pulse execution type

Flag signal: M1022 Carry flag

Explanation

- (D): Device to be rotated. (n): Number of bits for one rotation.
- Rotates the device designated by (D) to the left (n) bits.
- This command is ordinarily used as a pulse execution type command (ROLP).

Example

- When X0=Off→On, 4 of the 16 bits in D10 specify a left rotation; the content of the bit indicated with * (see figure below) will be sent to the carry flag signal M1022.

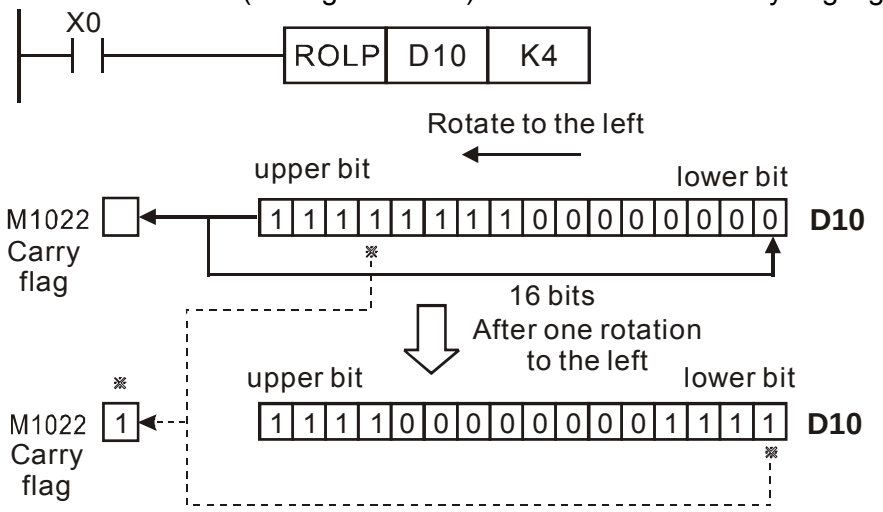

API 40		**ZRST**	**P**	(D1) (D2)	Clear range

	Bit device			Word device							
	X	Y	M	K	H	KnX	KnY	KnM	T	C	D
D1		∗	∗						∗	∗	∗
D2		∗	∗						∗	∗	∗

Notes on operand usage:
Number of operand D_1 operand ≤ number of operand D_2
Operands D_1, D_2 must designate the same type of device
Please refer to the function specifications table for each device in series for the scope of device usage

16-bit command (5 STEP)

ZRST	Continuous execution type	ZRSTP	Pulse execution type

32-bit command

—	—	—	—

Flag signal: none

Explanation

- **D_1**: Clear range's initial device. **D_2**: Clear range's final device.
- When the number of operand D_1 > number of operand D_2, only the operand designated by D_2 will be cleared.

Example

- When X0 is On, auxiliary relays M300 - M399 will be cleared and changed to Off.
- When X1 is On, 16-bit counters C0 - C127 will all be cleared. (Writes 0, and clears and changes contact and coil to Off).
- When X10 is On, timer T0 - T127 will all be cleared. (Writes 0, and clears and changes contact and coil to Off).
- When X3 is On, the data in data registers D0 - D100 will be cleared and set as 0.

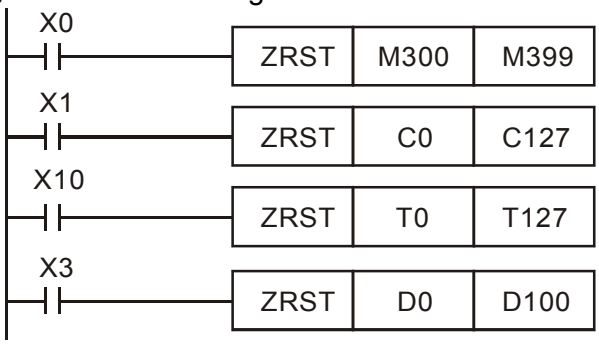

Remark

- Devices can independently use the clear command (RST), such as bit device Y, M and word device T, C, D.

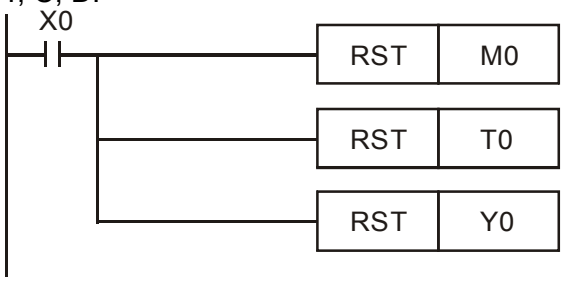

API 49	D	**FLT**	P	S D	BIN whole number → binary decimal transformation

	Bit device			Word device							
	X	Y	M	K	H	KnX	KnY	KnM	T	C	D
S		*	*						*	*	*
D		*	*						*	*	*

Notes on operand usage: Please refer to the function specifications table for each device in series for the scope of device usage
The operand D will occupy 2 consecutive points

16-bit command			
–	–	–	–

32-bit command (9steps)			
DFLT	Continuous execution type	DFLTP	Pulse execution type

Flag signal: none

Explanation

- **S**: Transformation source device. **D**: Device storing transformation results.
- Transforms BIN whole number into a binary decimal value.

Example

- When X11 is On, converts the whole number of values corresponding to D0 and D1 into floating point numbers, which are placed in D20 and D21.

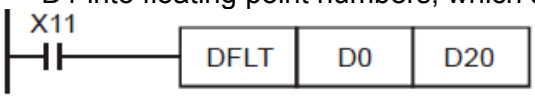

API 110	D	**ECMP**	P	S1 S2 D	Comparison of binary floating point numbers

	Bit device			Word device							
	X	Y	M	K	H	KnX	KnY	KnM	T	C	D
S1				*	*						*
S2				*	*						*
D				*	*						*

Notes on operand usage:
The operand D occupies three consecutive points
Please refer to the function specifications table for each device in series for the scope of device usage

16-bit command

—	—	—	—

32-bit command (13 STEP)

DECMP	Continuous execution type	DECMPP	Pulse execution type

Flag signal: none

Explanation

- **S_1**: Comparison of binary floating point numbers value 1. **S_2**: Comparison of binary floating point numbers value 2. **D**: Results of comparison, occupies 3 consecutive points.
- When binary floating point number 1 is compared with comparative binary floating point number 2, the result of comparison (>, =, <) will be expressed in **D**.
- **If the source operand S_1** or **S_2** designates a constant K or H, the command will transform the constant to a binary floating-point number for the purpose of comparison.

Example

- When the designated device is M10, it will automatically occupy M10-M12.
- When X0=On, the DECMP command executes, and one of M10-M12 will be On. When X0=Off, the DECMP command will not execute, and M10-M12 will remain in the X0=Off state.
- If results in the form of ≥, ≤, or ≠ are needed, they can be obtained by series and parallel connection of M10-M12.
- Please use the RST or ZRST command to clear the result.

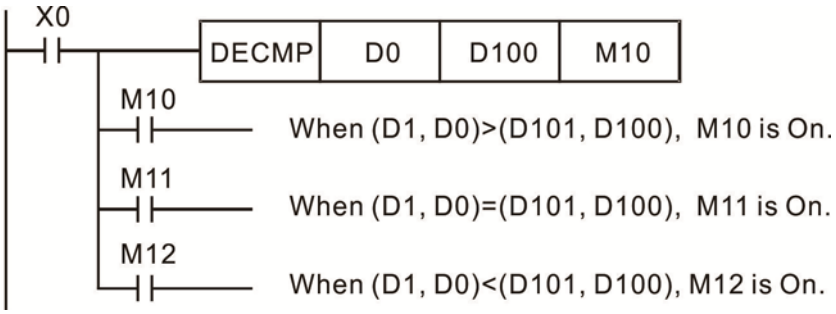

API 111	D	**EZCP**	P	S1 S2 S D	Comparison of binary floating point number range

	Bit device			Word device							
	X	Y	M	K	H	KnX	KnY	KnM	T	C	D
S1				*	*						*
S2				*	*						*
S				*	*						*
D		*	*								

Notes on operand usage:
The operand D occupies three consecutive points
Please refer to the function specifications table for each device in series for the scope of device usage

16-bit command

—	—	—	—

32-bit command (17 STEP)

DEZCP	Continuous execution type	DEZCPP	Pulse execution type

Flag signal: none

Explanation

- **S_1**: Lower limit of binary floating point number in range comparison. **S_2**: Upper limit of binary floating point number in range comparison. **S**: Comparison of binary floating point numerical values. **D**: Results of comparison, occupies 3 consecutive points.
- Comparison of binary floating point numerical value **S** with binary floating point number lower limit value **S_1** and binary floating point number upper limit value **S_2**; the results of comparison are expressed in **D**.
- **If the source operand S_1** or **S_2** designates a constant K or H, the command will transform the constant to a binary floating-point number for the purpose of comparison.
- When the lower limit binary floating point number **S_1** is greater than the upper limit binary floating point number **S_2**, a command will be issued to perform comparison with the upper and lower limits using the binary floating point number lower limit value **S_1**.

Example

- When the designated device is M0, it will automatically occupy M0- M2.
- When X0=On, the DEZCP command will be executed, and one of M0-M2 will be On. When X0=Off, the EZCP command will not execute, and M0-M2 will continue in the X0=Off state.
- Please use the RST or ZRST command to clear the result.

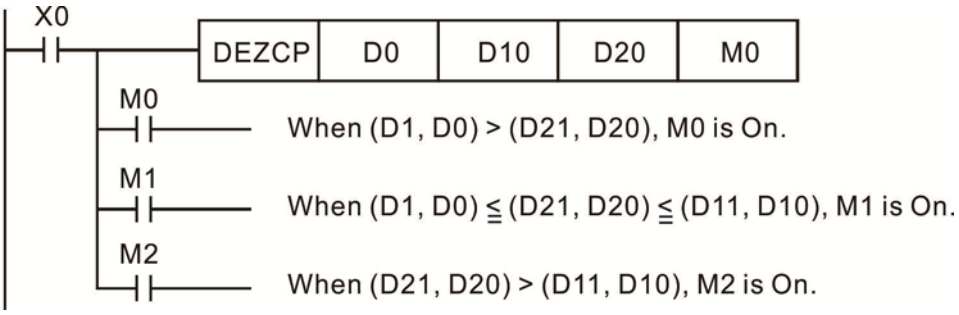

API 116	D	**RAD**	P	(S) (D)	Angle → Diameter

	Bit device			Word device							
	X	Y	M	K	H	KnX	KnY	KnM	T	C	D
S				*	*						*
D											*

Notes on operand usage:
Please refer to the function specifications table for each device in series for the scope of device usage

16-bit command

—	—	—	—

32-bit command (9 STEP)

DRAD	Continuous execution type	DRADP	脈波執行型

Flag signal: none

Explanation

- **S**: data source (angle). **D**: result of transformation (diameter).
- Uses the following formula to convert angles to radians.
- Diameter ＝Angle × (π/180)

Example

- When X0=On, the angle of the designated binary floating point number (D1, D0) will be converted to radians and stored in (D11, D10), with the content consisting of a binary floating point number.

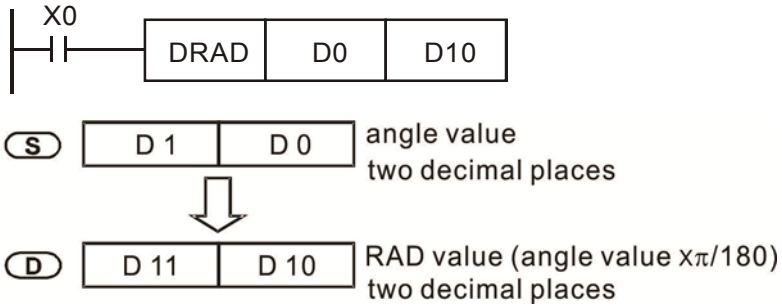

API 117	D	**DEG**	P	(S) (D)	Diameter → angle

	Bit device			Word device							
	X	Y	M	K	H	KnX	KnY	KnM	T	C	D
S				*	*						*
D											*

Notes on operand usage:
Please refer to the function specifications table for each device in series for the scope of device usage

16-bit command

—	—	—	—

32-bit command (9 STEP)

DDEG	Continuous execution type	DDEGP	Pulse execution type

Flag signal: none

Explanation

- **S**: data source (diameter). **D**: results of transformation (angle).
- Uses the following formula to convert radians to an angle.
- Angle ＝Diameter × (180/π)

Example

- When X0=On, angle of the designated binary floating point number (D1, D0) in radians will be converted to an angle and stored in (D11, D10), with the content consisting of a binary floating point number.

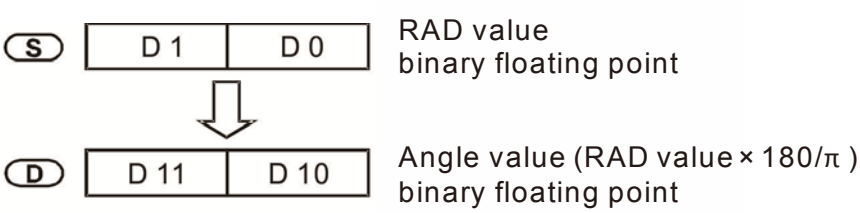

API 120	D	**EADD**	P	(S1) (S2) (D)	Adding binary floating point numbers

	Bit device			Word device							
	X	Y	M	K	H	KnX	KnY	KnM	T	C	D
S1				*	*						*
S2				*	*						*
D											*

Notes on operand usage:
Please refer to the function specifications table for each device in series for the scope of device usage

16-bit command			
—	—	—	—

32-bit command (9 STEP)			
DEADD	Continuous execution type	DEADDP	Pulse execution type

Flag signal: none

Explanation

- **S_1**: addend. **S_2**: augend. **D**: sum.
- When the content of the register designated by **S_2** is added to the content of the register designated by **S_1**, and the result is stored in the register designated by **D**. Addition is performed entirely using binary floating-point numbers.
- **If the source operand S_1** or **S_2** designates a constant K or H, the command will transform that constant into a binary floating point number for use in addition.
- **In the situation when S_1** and **S_2** designate identical register numbers, if a "continuous execution" command is employed, when conditional contact is On, the register will perform addition once during each scan. Pulse execution type commands (DEADDP) are generally used under ordinary circumstances.

Example

- When X0=On, a binary floating point number (D1, D0) will be added to a binary floating point number (D3, D2), and the results stored in (D11, D10).

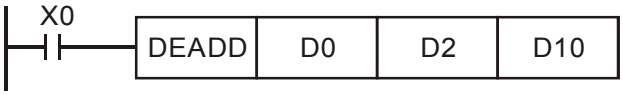

- When X2 =On, a binary floating point number (D11, D10) will be added to K1234 (which has been automatically converted to a binary floating-point number), and the results stored in (D21, D20).

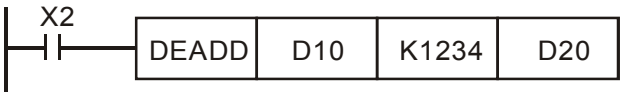

API 121	D	**ESUB**	P	S1 S2 D	Subtraction of binary floating point numbers

	Bit device			Word device							
	X	Y	M	K	H	KnX	KnY	KnM	T	C	D
S1				*	*						*
S2				*	*						*
D											*

Notes on operand usage:
Please refer to the function specifications table for each device in series for the scope of device usage

16-bit command			
—	—	—	—

32-bit command (13 STEP)			
DESUB	Continuous execution type	DESUBP	Pulse execution type

Flag signal: none

Explanation

- **S_1**: minuend. **S_2**: subtrahend. **D**: difference.
- When the content of the register designated by **S_2** is subtracted from the content of the register designated by **S_1**, the difference will be stored in the register designated by **D**; subtraction is performed entirely using binary floating-point numbers.
- **If the source operand S_1** or **S_2** designates a constant K or H, the command will transform that constant into a binary floating point number for use in subtraction.
- **In the situation when S_1** and **S_2** designate identical register numbers, if a "continuous execution" command is employed, when conditional contact is On, the register will perform addition once during each scan. Pulse execution type commands (DESUBP) are generally used under ordinary circumstances.

Example

- When X0=On, a binary floating point number (D1, D0) will be subtracted to a binary floating point number (D3, D2), and the results stored in (D11, D10).

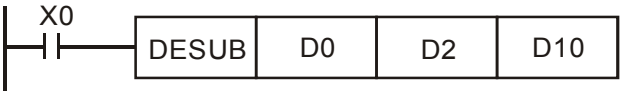

- When X2 =On, the binary floating point number (D1, D0) will be subtracted from K1234 (which has been automatically converted to a binary floating-point number), and the results stored in (D11, D10).

API 122	D	**EMUL**	P	S1 S2 D	Multiplication of binary floating point numbers

	Bit device			Word device							
	X	Y	M	K	H	KnX	KnY	KnM	T	C	D
S1				*	*						*
S2				*	*						*
D											*

Notes on operand usage:
Please refer to the function specifications table for each device in series for the scope of device usage

16-bit command			
—	—	—	—

32-bit command (13 STEP)			
DEMUL	Continuous execution type	DEMULP	Pulse execution type

Flag signal: none

Explanation

- **S_1**: multiplicand. **S_2**: multiplier. **D**: product.
- When the content of the register designated by **S_1** is multiplied by the content of the register designated by **S_2**, the product will be stored in the register designated by **D**; multiplication is performed entirely using binary floating-point numbers.
- **If the source operand S_1** or **S_2** designates a constant K or H, the command will transform that constant into a binary floating point number for use in multiplication.
- **In the situation when S_1** and **S_2** designate identical register numbers, if a "continuous execution" command is employed, when conditional contact is On, the register will perform multiplication once during each scan. Pulse execution type commands (DEMULP) are generally used under ordinary circumstances.

Example

- When X1=On, the binary floating point number (D1, D0) will be multiplied by the binary floating point number (D11, D10), and the product will be stored in the register designated by (D21, D20).

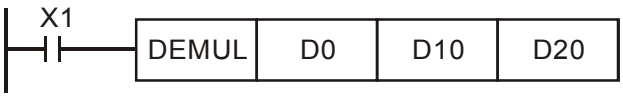

- When X2 =On, the binary floating point number (D1, D0) will be multiplied from K1234 (which has been automatically converted to a binary floating-point number), and the results stored in (D11, D10).

API 123	D	**EDIV**	P	S1 S2 D	Division of binary floating point numbers

	Bit device			Word device							
	X	Y	M	K	H	KnX	KnY	KnM	T	C	D
S1				*	*						*
S2				*	*						*
D											*

Notes on operand usage:
Please refer to the function specifications table for each device in series for the scope of device usage

16-bit command

—	—	—	—

32-bit command (13 STEP)

DEDIV	Continuous execution type	DEDIVP	Pulse execution type

Flag signal: none

Explanation

◆ **S_1**: dividend. **S_2**: divisor. **D**: quotient and remainder.

◆ When the content of the register designated by **S_1** is divided by the content of the register designated by **S_2**, the quotient will be stored in the register designated by **D**; division is performed entirely using binary floating-point numbers.

■ **If the source operand S_1** or **S_2** designates a constant K or H, the command will transform that constant into a binary floating point number for use in division.

Example

◆ When X1=On, the binary floating point number (D1, D0) will be divided by the binary floating point number (D11, D10), and the quotient stored in the register designated by (D21, D20).

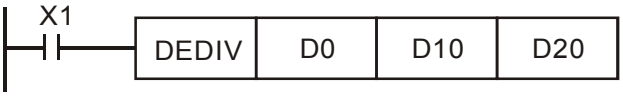

◆ When X2 =On, the binary floating point number (D1, D0) will be divided by K1,234 (which has been automatically converted to a binary floating-point number), and the results stored in (D11, D10).

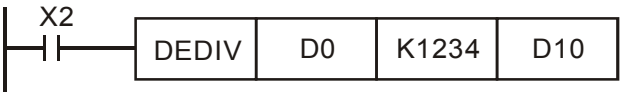

API 124	D	**EXP**	P	S D	Binary floating point number obtain exponent

	Bit device			Word device							
	X	Y	M	K	H	KnX	KnY	KnM	T	C	D
S				*	*						*
D											*

Notes on operand usage:
Please refer to the function specifications table for each device in series for the scope of device usage

16-bit command			
—	—	—	—

32-bit command (9 STEP)			
DEXP	Continuous execution type	DEXPP	Pulse execution type

Flag signal: none

Explanation

- **S**: operation source device. **D**: operation results device.
- Taking e =2.71828 as a base, **S** is the exponent in the EXP operation.
- [**D** +1，**D**]=EXP[**S +1**，**S**]
- Valid regardless of whether the content of **S** has a positive or negative value. The designated register D must have a 32-bit data format. This operation is performed using floating-point numbers, and **S** must therefore be converted to a floating point number.
- Content of operand **D** =e^{S} ; e=2.71828, **S** is the designated source data

Example

- When M0 is On, the value of (D1, D0) will be converted to a binary floating point number, which will be stored in register (D11, D10).
- When M1 is On, the EXP operation is performed on the exponent of (D11, D10); its value is a binary floating point number stored in register (D21, D20).

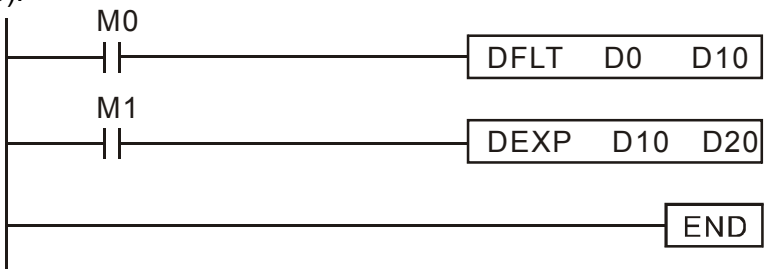

API 125	D	**LN**	P	S D	Binary floating point number obtain logarithm

	Bit device			Word device							
	X	Y	M	K	H	KnX	KnY	KnM	T	C	D
S				*	*						*
D											*

Notes on operand usage:
Please refer to the function specifications table for each device in series for the scope of device usage

16-bit command			
—	—	—	—

32-bit command (9 STEP)			
DLN	Continuous execution type	DLNP	Pulse execution type

Flag signal: none

Explanation

- **S**: operation source device. **D**: operation results device.
- Taking e =2.71828 as a base, **S** is the exponent in the EXP operation.
- [**D** +1，**D**]=EXP[**S +1**，**S**]
- Valid regardless of whether the content of **S** has a positive or negative value. The designated register D must have a 32-bit data format. This operation is performed using floating-point numbers, and **S** must therefore be converted to a floating point number.
- Content of operand **D** =e^{S} ; e=2.71828， **S** is the designated source data

Example

- When M0 is On, the value of (D1, D0) will be converted to a binary floating point number, which will be stored in register (D11, D10).
- When M1 is On, the EXP operation is performed on the exponent of (D11, D10); its value is a binary floating point number stored in register (D21, D20).

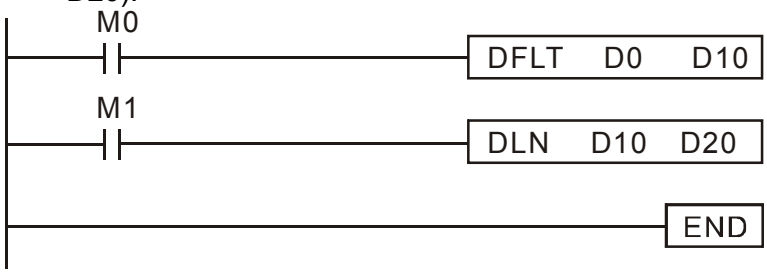

API 127	D	**ESQR**	P	S D	Binary floating point number find square root

	Bit device			Word device							
	X	Y	M	K	H	KnX	KnY	KnM	T	C	D
S				*	*						*
D											*

Notes on operand usage:
Please refer to the function specifications table for each device in series for the scope of device usage

16-bit command

—	—	—	—

32-bit command (9 STEP)

DESQR	Continuous execution type	DESQR P	Pulse execution type

Flag signal: none

Explanation

- **S**: source device for which square root is desired **D**: result of finding square root.
- When the square root is taken of the content of the register designated by **S**, the result is temporarily stored in the register designated by **D**. Taking square roots is performed entirely using binary floating-point numbers.
- If the source operand **S** refers to a constant K or H, the command will transform that constant into a binary floating point number for use in the operation.

Example

- When X0=On, the square root is taken of the binary floating point number (D1, D0), and the result is stored in the register designated by (D11, D10).

$\sqrt{(D1, D0)} \rightarrow (D11, D10)$

Binary floating point → Binary floating point

- When X2 =On, the square root is taken of K1,234 (which has been automatically converted to a binary floating-point number), and the results stored in (D11, D10).

API 129	D	**INT**	P	S D	Binary floating point number → BIN whole number transformation

	Bit device			Word device							
	X	Y	M	K	H	KnX	KnY	KnM	T	C	D
S											*
D											*

Notes on operand usage:
Please refer to the function specifications table for each device in series for the scope of device usage

16-bit command			
–	–	–	–

32-bit command (9 STEP)			
DINT	Continuous execution type	DINTP	Pulse execution type

Flag signal: none

Explanation

- **S**: the source device to be transformed. **D**: results of transformation.
- The content of the register designated by **S** is transformed from a binary floating point number format into a BIN whole number, and is temporarily stored in **D**. The BIN whole number floating point number will be discarded.
- The action of this command is the opposite of that of command API 49 (FLT).

Example

- When X0=On, the binary floating point number (D1, D0) is transformed into a BIN whole number, and the result is stored in (D10); the BIN whole number floating point number will be discarded.

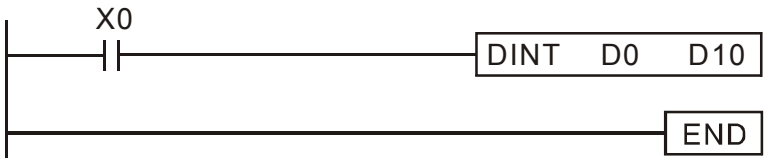

API 130	D	**SIN**	P	(S) (D)	Binary floating point number SIN operation

	Bit device			Word device							
	X	Y	M	K	H	KnX	KnY	KnM	T	C	D
S				*	*						*
D											*

Notes on operand usage:
Please refer to the function specifications table for each device in series for the scope of device usage

16-bit command

—	—	—	—

32-bit command (9 STEP)

DSIN	Continuous execution type	DSINP	Pulse execution type

Flag signal: none

Explanation

- **S**: the designated source value. **D**: the SIN value result.
- **S** is the designated source in radians.
- The value in radians (RAD) is equal to (angle ×π/180).
- The SIN obtained from the source value designated by **S** is stored in **D**.

The following figure displays the relationship between the arc and SIN results:

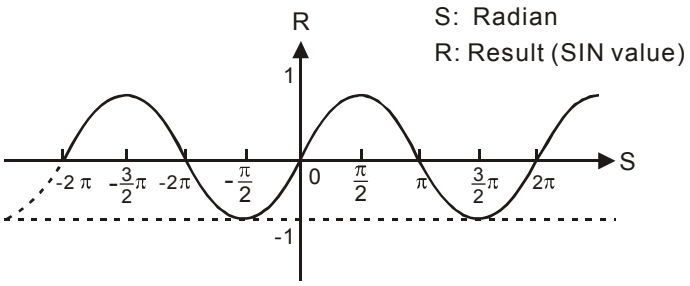

Example

- When X0=On, the SIN value of the designated binary floating point number (D1, D0) in radians (RAD) will be stored in (D11, D10), with the content consisting of a binary floating point number.

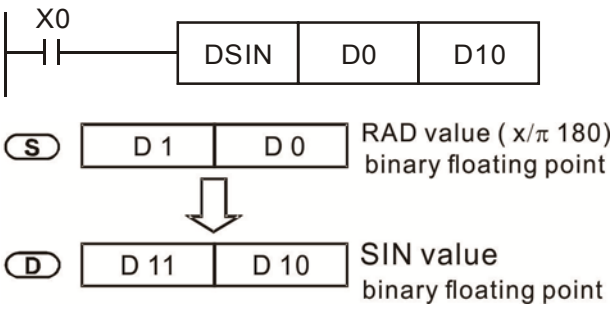

API 131	D	**COS**	P	(S) (D)	Binary floating point number COS operation

	Bit device			Word device							
	X	Y	M	K	H	KnX	KnY	KnM	T	C	D
S				*	*						*
D											*

Notes on operand usage:
Please refer to the function specifications table for each device in series for the scope of device usage

16-bit command			
—	—	—	—

32-bit command (9 STEP)			
DCOS	Continuous execution type	DCOSP	Pulse execution type

Flag signal: none

Explanation

- **S**: the designated source value. **D**: the COS value result.
- **The source designated by S can be given as radians or an angle; this is decided by flag M1018.**
- When M1018=Off, the operation is in radians mode, where the radians (RAD) value is equal to (angle ×π/180).
- When M1018=On, the operation is in the angle mode, where the angular range is 0°≤ angle <360°.
- When calculation results yield 0, M1020=On.
- The COS obtained from the source value designated by **S** is stored in **D**.

The following figure displays the relationship between the arc and SIN results:

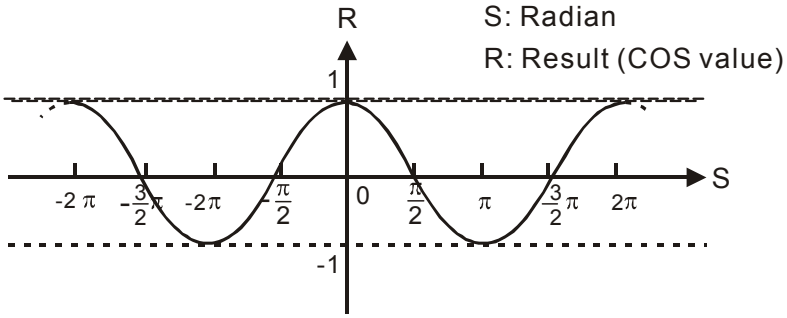

Example

- When X0=On, the COS value of the designated binary floating point number (D1, D0) in radians will be stored in (D11, D10), with the content consisting of a binary floating point number.

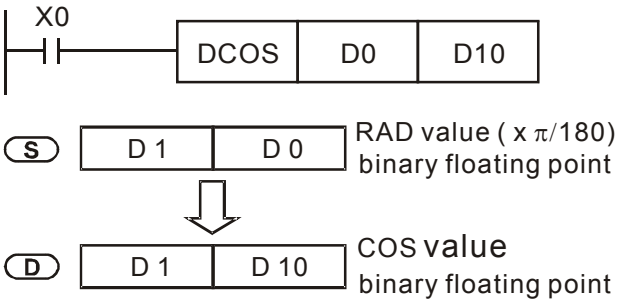

API 132	D	TAN	P	(S) (D)	Binary floating point number TAN operation

	Bit device			Word device							
	X	Y	M	K	H	KnX	KnY	KnM	T	C	D
S				*	*						*
D											*

Notes on operand usage:
Please refer to the function specifications table for each device in series for the scope of device usage

16-bit command

—	—	—	—

32-bit command (9 STEP)

DTAN	Continuous execution type	DTANP	Pulse execution type

Flag signal: none

Explanation

- **S**: the designated source value. **D**: the TAN value result.
- The source designated by **S** can be given as radians or an angle; this is decided by flag M1018.
- When M1018=Off, the operation is in radians mode, where the radians (RAD) value is equal to (angle ×π/180).
- When M1018=On, the operation is in the angle mode, where the angular range is 0°≤ angle <360°.
- When calculation results yield 0, M1020=On.
- The TAN obtained from the source value designated by **S** is stored in **D**.

The following figure displays the relationship between the arc and SIN results:

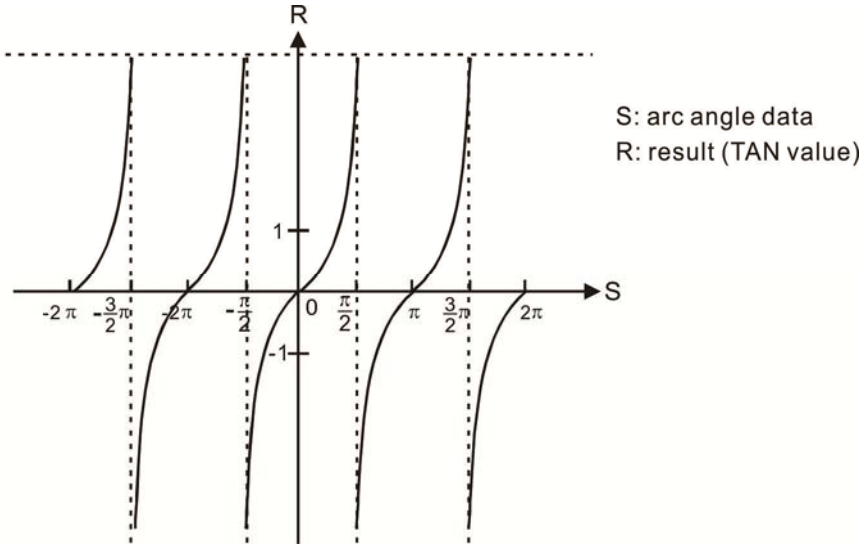

Example

◆ When X0=On, the TAN value of the designated binary floating point number (D1, D0) in radians (RAD) will be stored in (D11, D10), with the content consisting of a binary floating point number.

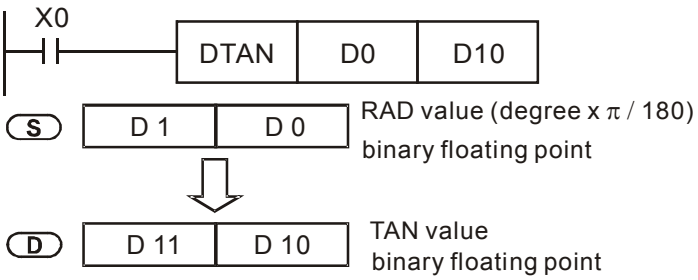

API 133	D	**ASIN**	P	(S) (D)	Binary floating point number ASIN operation

	Bit device			Word device							
	X	Y	M	K	H	KnX	KnY	KnM	T	C	D
S				*	*						*
D											*

Notes on operand usage:
Please refer to the function specifications table for each device in series for the scope of device usage

16-bit command

—	—	—	—

32-bit command (9 STEP)

DASIN	Continuous execution type	DASINP	Pulse execution type

Flag signal: none

Explanation

- **S**: the designated source (binary floating point number). **D**: the ASIN value result.
- ASIN value =$\sin^{-1}$

The figure below shows the relationship between input data and result:

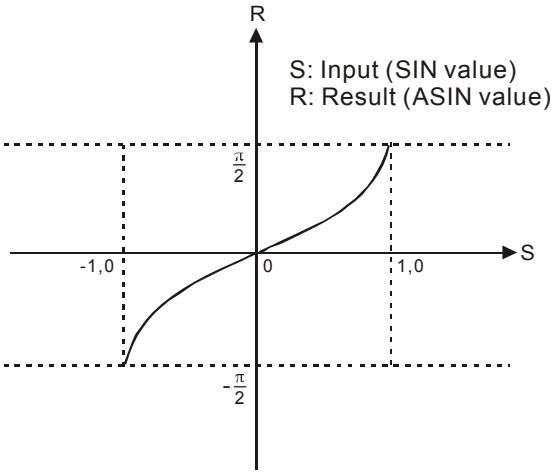

Example

- When X0=On, the ASIN value obtained from the designated binary floating point number (D1, D0) will be stored in (D11, D10), with the content consisting of a binary floating point number.

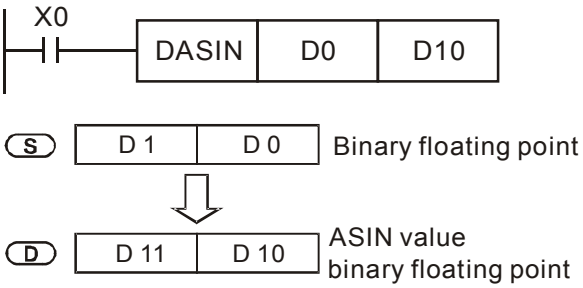

API 134	D	**ACOS**	P	(S) (D)	Binary floating point number ACOS operation

	Bit device			Word device							
	X	Y	M	K	H	KnX	KnY	KnM	T	C	D
S				*	*						*
D											*

Notes on operand usage:
Please refer to the function specifications table for each device in series for the scope of device usage

16-bit command

—	—	—	—

32-bit command (9 STEP)

DACOS	Continuous execution type	DACOS P	Pulse execution type

Flag signal: none

Explanation

- **S**: the designated source (binary floating point number). **D**: the ACOS value result.
- ACOS value =$\cos^{-1}$

The figure below shows the relationship between input data and result:

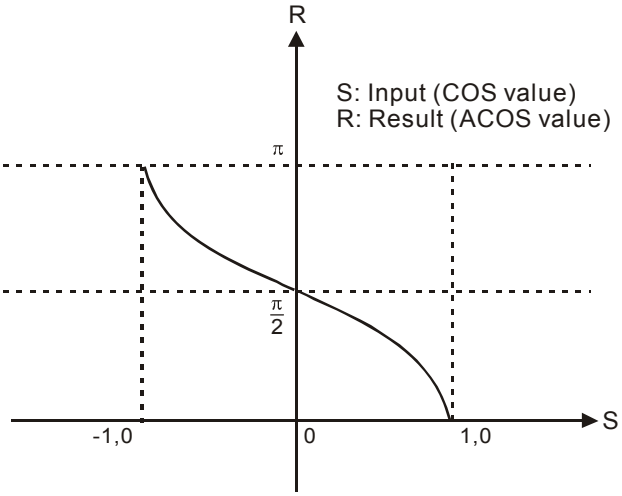

Example

- When X0=On, the ACOS value obtained from the designated binary floating point number (D1, D0) will be stored in (D11, D10), with the content consisting of a binary floating point number.

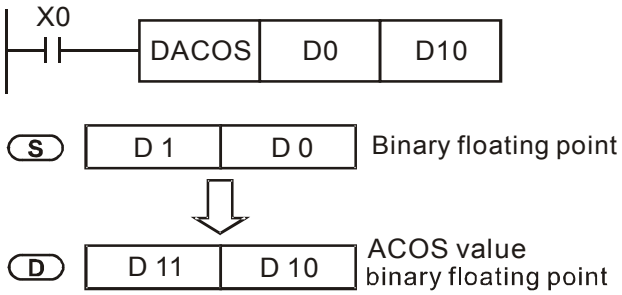

API 135	D	**ATAN**	P	(S) (D)	Binary floating point number ATAN operation

	Bit device			Word device							
	X	Y	M	K	H	KnX	KnY	KnM	T	C	D
S				*	*						*
D											*

Notes on operand usage:
Please refer to the function specifications table for each device in series for the scope of device usage

16-bit command

—	—	—	—

32-bit command (9 STEP)

DATAN	Continuous execution type	DATANP	Pulse execution type

Flag signal: none

Explanation

- **S**: the designated source (binary floating point number). **D**: the ATAN value result.
- ATAN value =$\tan^{-1}$

The figure below shows the relationship between input data and result:

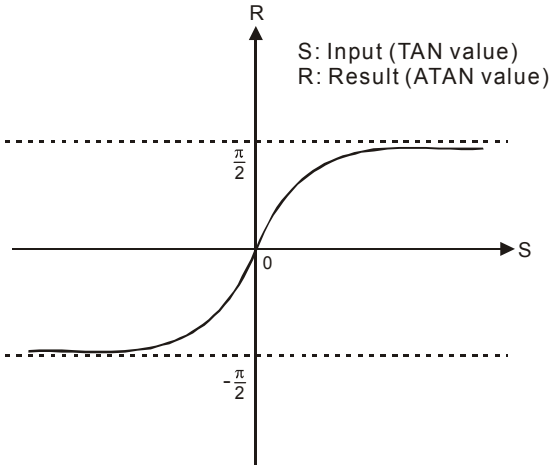

Example

◆ When X0=On, the TAN value obtained from the designated binary floating point number (D1, D0) will be stored in (D11, D10), with the content consisting of a binary floating point number.

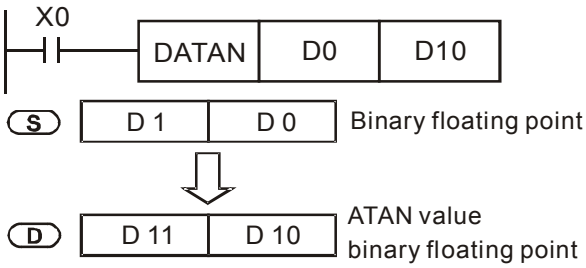

API 136	D	**SINH**	P	(S) (D)	Binary floating point number SINH operation

	Bit device			Word device							
	X	Y	M	K	H	KnX	KnY	KnM	T	C	D
S				*	*						*
D											*

Notes on operand usage:
Please refer to the function specifications table for each device in series for the scope of device usage

16-bit command

—	—	—	—

32-bit command (9 STEP)

DSINH	Continuous execution type	DSINHP	Pulse execution type

Flag signal: none

Explanation

- **S**: the designated source (binary floating point number). **D**: the SINH value result.
- SINH value $=(e^{s}-e^{-s})/2$

Example

- When X0=On, the SINH value obtained from the designated binary floating point number (D1, D0) will be stored in (D11, D10), with the content consisting of a binary floating point number.

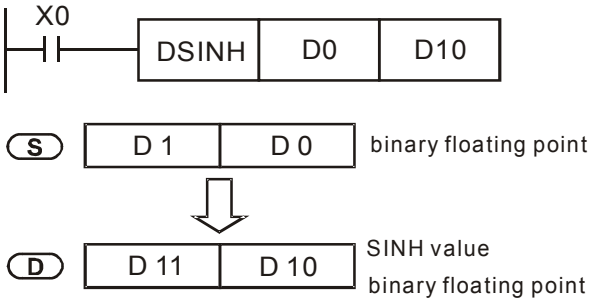

API 137	D	**COSH**	P	(S) (D)	Binary floating point number COSH operation

	Bit device			Word device							
	X	Y	M	K	H	KnX	KnY	KnM	T	C	D
S				*	*						*
D											*

Notes on operand usage:
Please refer to the function specifications table for each device in series for the scope of device usage

16-bit command

—	—	—	—

32-bit command (9 STEP)

DCOSH	Continuous execution type	DCOSHP	Pulse execution type

Flag signal: none

Explanation

- **S**: the designated source (binary floating point number). **D**: the COSH value result.
- COSH value $=(e^{s}+e^{-s})/2$

Example

- When X0=On, the COSH value obtained from the designated binary floating point number (D1, D0) will be stored in (D11, D10), with the content consisting of a binary floating point number.

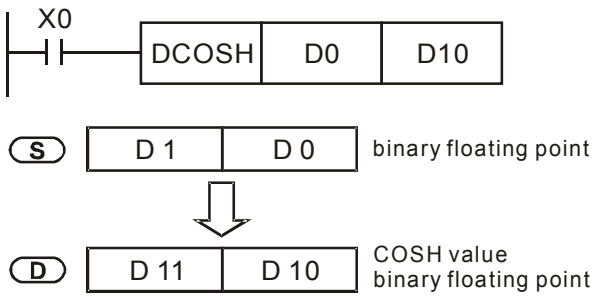

API 138	D	**TANH**	P	(S) (D)	Binary floating point number TANH operation

	Bit device			Word device							
	X	Y	M	K	H	KnX	KnY	KnM	T	C	D
S				*	*						*
D											*

Notes on operand usage:
Please refer to the function specifications table for each device in series for the scope of device usage

16-bit command

—	—	—	—

32-bit command (9 STEP)

DTANH	Continuous execution type	DTANHP	Pulse execution type

Flag signal: none

Explanation

- **S**: the designated source (binary floating point number). **D**: the TANH value result.
- tanh value $=(e^{s}-e^{-s})/(e^{s}+e^{-s})$

Example

- When X0=On, the TANH value obtained from the designated binary floating point number (D1, D0) will be stored in (D11, D10), with the content consisting of a binary floating point number.

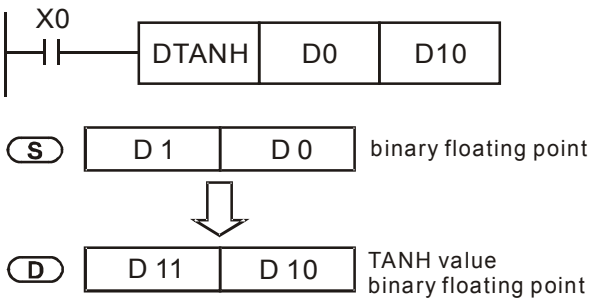

API 170	D	**GRY**	P	S D	BIN→GRAY code transformation

	Bit device			Word device							
	X	Y	M	K	H	KnX	KnY	KnM	T	C	D
S				*	*	*	*	*	*	*	*
D							*	*	*	*	*

Notes on operand usage:
Please refer to the function specifications table for each device in series for the scope of device usage

16-bit command (5 STEP)

GRY	Continuous execution type	GRYP	Pulse execution type

32-bit command (9 STEP)

DGRY	Continuous execution type	DGRYP	Pulse execution type

- Flag signal: none

Explanation

- **S**: source device. **D**: device storing GRAY code.
- Transforms the content value (BIN value) of the device designated by **S** to GRAY code, which is stored in the device designated by **D**.
- The valid range of **S** is as shown below; if this range is exceeded, it will be considered an error, and the command will not execute.

  16-bit command: 0~32,767
- 32-bit command: 0~2,147,483,647

Example

◆ When X0=On, the constant K6513 will be transformed to GRAY code and stored in D0.

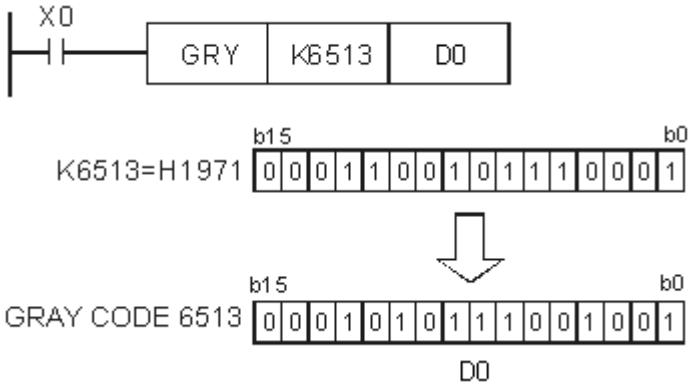

API 171	D	**GBIN**	P	S D	GRAY code →BIN transformation

	Bit device			Word device							
	X	Y	M	K	H	KnX	KnY	KnM	T	C	D
S				*	*	*	*	*	*	*	*
D							*	*	*	*	*

Notes on operand usage:
Please refer to the function specifications table for each device in series for the scope of device usage

16-bit command (5 STEP)

GBIN	Continuous execution type	GBINP	Pulse execution type

32-bit command (9 STEP)

DGBIN	Continuous execution type	DGBINP	Pulse execution type

- Flag signal: none

Explanation

- **S**: source device used to store GRAY code. **D**: device used to store BIN value after transformation.
- The GRAY code corresponding to the value of the device designated by **S** is transformed into a BIN value, which is stored in the device designated by **D**.
- This command will transform the value of the absolute position encoder connected with the PLC's input and (this encoder usually has an output value in the form of GRAY code) into a BIN value, which is stored in the designated register.
- The valid range of **S** is as shown below; if this range is exceeded, it will be considered an error, and the command will not execute.

  16-bit command: 0~32,767
- 32-bit command: 0~2,147,483,647

Example

◆ When X20=On, the GRAY code of the absolute position encoder connected with input points X0 to X17 will be transformed into BIN value and stored in D10.

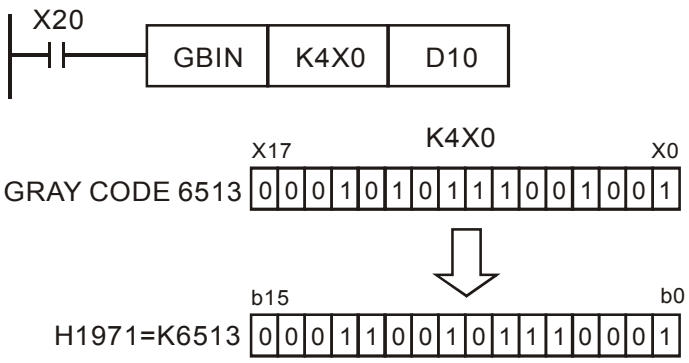

API 215~217	D	**LD#**		(S1) (S2)	Contact form logical operation LD#

	Bit device			Word device							
	X	Y	M	K	H	KnX	KnY	KnM	T	C	D
S1				*	*	*	*	*	*	*	*
S2				*	*	*	*	*	*	*	*

Notes on operand usage: # ：&、|、^
Please refer to the function specifications table for each device in series for the range of device usage

16-bit command (5 STEP)

LD#	Continuous execution type	—	—

32-bit command (9 STEP)

DLD#	Continuous execution type	—	—

Flag signal: none

Explanation

- **S_1**: data source device 1. **S_2**: data source device 2.
- This command performs comparison of the content of **S_1** and **S_2**; when the result of comparison is not 0, this command will be activated, but this command will not be activated when the result of comparison is 0.
- The LD#This command can be used while directly connected with the busbar

API No.	16-bit commands	32-bit commands	Conditions for activation				Conditions for inactivation			
215	LD&	**D**LD&	**S_1**	&	**S_2**	≠0	**S_1**	&	**S_2**	=0
216	LD|	**D**LD|	**S_1**	|	**S_2**	≠0	**S_1**	|	**S_2**	=0
217	LD^	**D**LD^	**S_1**	^	**S_2**	≠0	**S_1**	^	**S_2**	=0

&: logical AND operation.

|: logical OR operation.

^: logical XOR operation.

Example

- When the content of C0 and C10 is subjected to the logical AND operation, and the result is not equal to 0, Y10=On.
- When the content of D200 and D300 is subjected to the logical OR operation, and the result is not equal to 0, and X1=On, Y11=On and remains in that state.

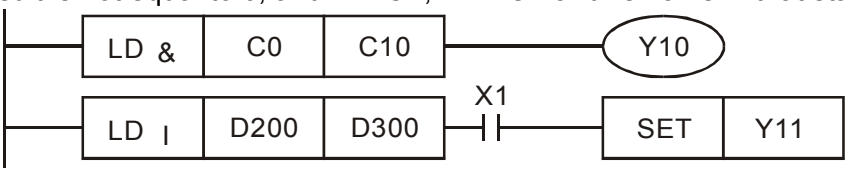

API 218~220	D	**AND#**		(S1) (S2)	Contact form logical operation AND#

	Bit device			Word device							
	X	Y	M	K	H	KnX	KnY	KnM	T	C	D
S1				*	*	*	*	*	*	*	*
S2				*	*	*	*	*	*	*	*

Notes on operand usage: # : & 、| 、^
Please refer to the function specifications table for each device in series for the scope of device usage

16-bit command (5 STEP)			
AND#	Continuous execution type	—	—

32-bit command (9 STEP)			
DAND#	Continuous execution type	—	—

Flag signal: none

Explanation

- **S_1**: data source device 1. **S_2**: data source device 2.
- This command performs comparison of the content of **S_1** and **S_2**; when the result of comparison is not 0, this command will be activated, but this command will not be activated when the result of comparison is 0.
- The AND# command is an operation command in series with the contact.

API No.	16-bit commands	32-bit commands	Conditions for activation				Conditions for inactivation			
218	AND&	**D**AND&	**S_1**	&	**S_2**	≠ 0	**S_1**	&	**S_2**	= 0
219	AND|	**D**AND|	**S_1**	|	**S_2**	≠ 0	**S_1**	|	**S_2**	= 0
220	AND^	**D**AND^	**S_1**	^	**S_2**	≠ 0	**S_1**	^	**S_2**	= 0

&: logical AND operation.

|: logical OR operation.

^: logical XOR operation.

Example

- When X0=On and the content of C0 and C10 is subjected to the logical AND operation, and the result is not equal to 0, Y10=On.
- When X1=Off and D10 and D0 is subjected to the logical OR operation, and the result is not equal to 0, Y11=On and remains in that state.
- When X2 =On and the content of the 32-bit register D200(D201) and 32-bit register D100(D101) is subjected to the logical XOR operation, and the result is not equal to 0 or M3=On, M50=On.

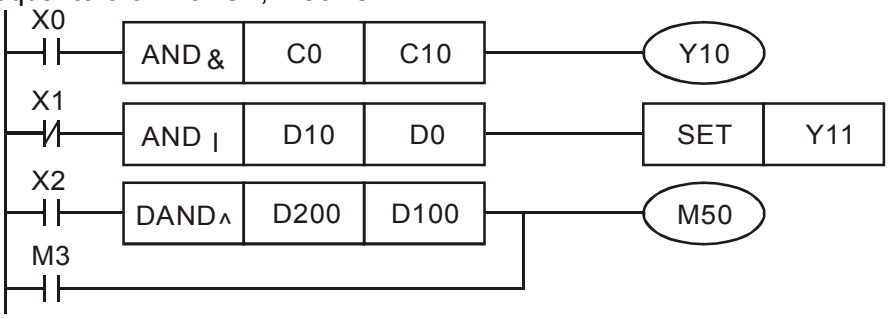

API 221~223	D	**OR#**		(S1) (S2)	Contact form logical operation OR#

	Bit device			Word device							
	X	Y	M	K	H	KnX	KnY	KnM	T	C	D
S1				*	*	*	*	*	*	*	*
S2				*	*	*	*	*	*	*	*

Notes on operand usage: # : & 、| 、^
Please refer to the function specifications table for each device in series for the scope of device usage

16-bit command (5 STEP)			
OR#	Continuous execution type	—	—

32-bit command (9 STEP)			
DOR#	Continuous execution type	—	—

Flag signal: none

Explanation

- **S_1**: data source device 1. **S_2**: data source device 2.
- This command performs comparison of the content of **S_1** and **S_2**; when the result of comparison is not 0, this command will be activated, but this command will not be activated when the result of comparison is 0.
- The OR# command is an operation command in series with the contact.

API No.	16-bit commands	32-bit commands	Conditions for activation				Conditions for inactivation			
221	OR&	**D**OR&	**S_1**	&	**S_2**	≠0	**S_1**	&	**S_2**	=0
222	OR|	**D**OR|	**S_1**	|	**S_2**	≠0	**S_1**	|	**S_2**	=0
223	OR^	**D**OR^	**S_1**	^	**S_2**	≠0	**S_1**	^	**S_2**	=0

&: logical AND operation.

|: logical OR operation.

^: logical XOR operation.

Example

- When X1=On or the content of C0 and C10 is subjected to the logical AND operation, and the result is not equal to 0, Y0=On.
- When X2 and M30 are both equal to On, or the content of 32-bit register D10 (D11) and 32-bit register D20 (D21) is subjected to the logical OR operation, and the result is not equal to 0, or the content of the 32-bit counter C235 and the 32-bit register D200 (D201) is subjected to the logical XOR operation, and the result is not equal to 0, M60=On.

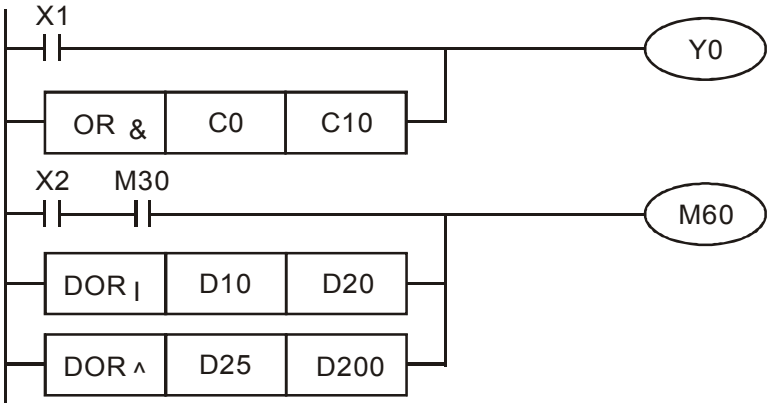

API 224~230	D	**LD※**		(S1) (S2)	Contact form compare LD*

	Bit device			Word device							
	X	Y	M	K	H	KnX	KnY	KnM	T	C	D
S1				*	*	*	*	*	*	*	*
S2				*	*	*	*	*	*	*	*

Notes on operand usage: ※ : = 、 > 、 < 、 <> 、 ≦ 、 ≧
Please refer to the function specifications table for each device in series for the scope of device usage

16-bit command (5 STEP)			
LD※	Continuous execution type	–	–

32-bit command (9 STEP)			
DLD※	Continuous execution type	–	–

Flag signal: none

Explanation

- **S_1**: data source device 1. **S_2**: data source device 2.
- This command compares the content of **S_1** and **S_2**. Taking API 224 (LD=) as an example, this command will be activated when the result of comparison is "equal," and will not be activated when the result is "unequal."
- The LD* can be used while directly connected with the busbar

API No.	16-bit commands	32-bit commands	Conditions for activation	Conditions for inactivation
224	LD＝	**D**LD＝	$S_1 = S_2$	$S_1 \neq S_2$
225	LD＞	**D**LD＞	$S_1 > S_2$	$S_1 \leqq S_2$
226	LD＜	**D**LD＜	$S_1 < S_2$	$S_1 \geqq S_2$
228	LD＜＞	**D**LD＜＞	$S_1 \neq S_2$	$S_1 = S_2$
229	LD＜＝	**D**LD＜＝	$S_1 \leqq S_2$	$S_1 > S_2$
230	LD＞＝	**D**LD＞＝	$S_1 \geqq S_2$	$S_1 < S_2$

Example

- When the content of C10 is equal to K200, Y10=On.
- When the content of D200 is greater than K-30, and X1=On, Y11=On and remains in that state.

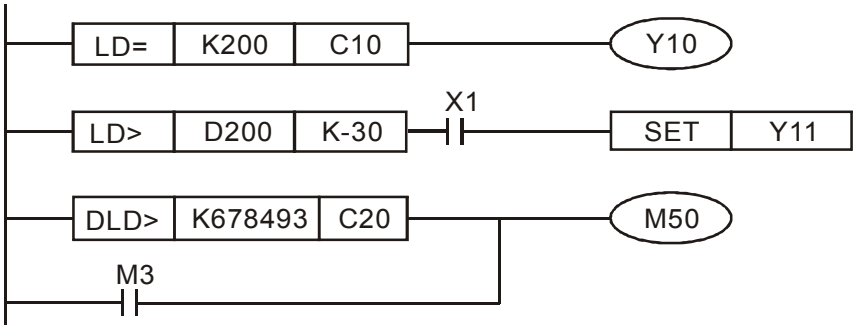

API 232~238	D	**AND※**		(S1) (S2)	Contact form compare AND*

	Bit device			Word device							
	X	Y	M	K	H	KnX	KnY	KnM	T	C	D
S1				*	*	*	*	*	*	*	*
S2				*	*	*	*	*	*	*	*

Notes on operand usage: ※ : = 、 > 、 < 、 <> 、 ≦ 、 ≧
Please refer to the function specifications table for each device in series for the scope of device usage

16-bit command (5 STEP)			
AND※	Continuous execution type	—	—

32-bit command (9 STEP)			
DAND※	Continuous execution type	—	—

Flag signal: none

Explanation

- **S_1**: data source device 1. **S_2**: data source device 2.
- This command compares the content of **S_1** and **S_2**. Taking API 232 (AND=) as an example, when the result of comparison is equal, this command will be activated; when the result of comparison is unequal, this command will not be activated.
- The AND* command is a comparison command in series with a contact.

API No.	16-bit commands	32-bit commands	Conditions for activation	Conditions for inactivation
232	AND＝	**D**AND＝	$S_1 = S_2$	$S_1 \neq S_2$
233	AND＞	**D**AND＞	$S_1 > S_2$	$S_1 \leqq S_2$
234	AND＜	**D**AND＜	$S_1 < S_2$	$S_1 \geqq S_2$
236	AND＜＞	**D**AND＜＞	$S_1 \neq S_2$	$S_1 = S_2$
237	AND＜＝	**D**AND＜＝	$S_1 \leqq S_2$	$S_1 > S_2$
238	AND＞＝	**D**AND＞＝	$S_1 \geqq S_2$	$S_1 < S_2$

Example

- When X0=On and the current value of C10 is also equal to K200, Y10=On.
- When X1=Off and the content of register D0 is not equal to K-10, Y11=On and remains in that state.
- When X2 =On and the content of the 32-bit register D0(D11)is less than 678,493, or M3=On, M50=On.

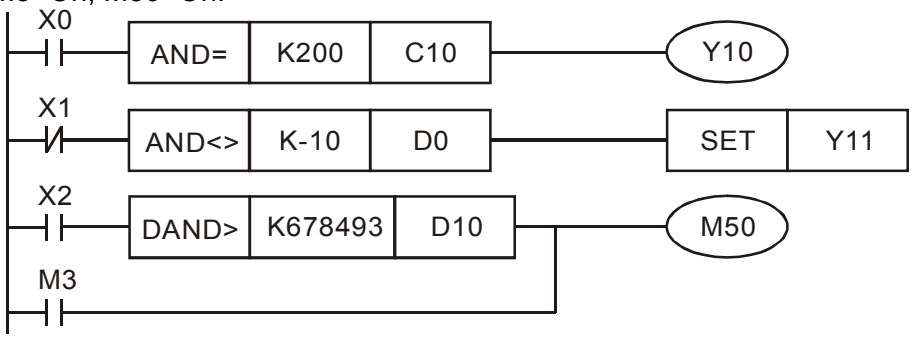

API 240~246	D	**OR※**		(S1) (S2)	Contact form compare OR*

	Bit device			Word device							
	X	Y	M	K	H	KnX	KnY	KnM	T	C	D
S1				*	*	*	*	*	*	*	*
S2				*	*	*	*	*	*	*	*

Notes on operand usage: ※ : = 、 > 、 < 、 <> 、 ≦ 、 ≧
Please refer to the function specifications table for each device in series for the scope of device usage

16-bit command (5 STEP)

OR※	Continuous execution type	—	—

32-bit command (9 STEP)

DOR※	Continuous execution type	—	—

Flag signal: none

Explanation

- **S_1**: data source device 1. **S_2**: data source device 2.
- This command compares the content of **S_1** and **S_2**. Taking API 240 (OR=) as an example, when the result of comparison is equal, this command will be activated; when the result of comparison is unequal, this command will not be activated.
- The OR* command is a compare command in parallel with a contact.

API No.	16-bit commands	32-bit commands	Conditions for activation	Conditions for inactivation
240	OR＝	**D**OR＝	$S_1 = S_2$	$S_1 \neq S_2$
241	OR＞	**D**OR＞	$S_1 > S_2$	$S_1 \leqq S_2$
242	OR＜	**D**OR＜	$S_1 < S_2$	$S_1 \geqq S_2$
244	OR＜＞	**D**OR＜＞	$S_1 \neq S_2$	$S_1 = S_2$
245	OR＜＝	**D**OR＜＝	$S_1 \leqq S_2$	$S_1 > S_2$
246	OR＞＝	**D**OR＞＝	$S_1 \geqq S_2$	$S_1 < S_2$

Example

- When X0=On and the current value of C10 is also equal to K200, Y10=On.
- When X1=Off and the content of register D0 is not equal to K-10, Y11=On and remains in that state.
- When X2 =On and the content of the 32-bit register D0(D11)is less than 678,493, or M3=On, M50=On.

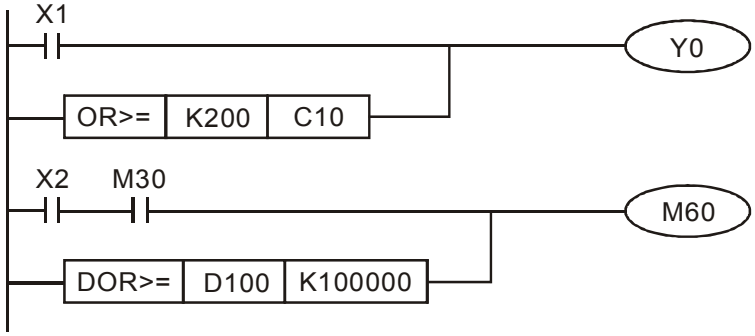

API 275~280		**FLD※**		(S1) (S2)	Floating point number contact form compare LD*

	Bit device			Word device							
	X	Y	M	K	H	KnX	KnY	KnM	T	C	D
S1									∗	∗	∗
S2									∗	∗	∗

Notes on operand usage: #：&、|、^
Please refer to the function specifications table for each device in series for the scope of device usage

16-bit command

—	—	—	—

32-bit command (9 STEP)

FLD※	Continuous execution type	—	—

Flag signal: none

Explanation

- **S_1**: data source device 1. **S_2**: data source device 2.
- This command compares the content of **S_1** and **S_2**. Taking "FLD=" as an example, if the result of comparison is "equal," this command will be activated; but it will not be activated when the result is "unequal."
- The FLD* command can directly input floating point numerical values (for instance: F1.2) to the **S_1**, **S_2** operands, or store floating-point numbers in register D for use in operations.
- This command can be used while directly connected with the busbar

API No.	32-bit commands	Conditions for activation	Conditions for inactivation
275	FLD＝	$S_1 = S_2$	$S_1 \neq S_2$
276	FLD＞	$S_1 > S_2$	$S_1 \leqq S_2$
277	FLD＜	$S_1 < S_2$	$S_1 \geqq S_2$
278	FLD＜＞	$S_1 \neq S_2$	$S_1 = S_2$
279	FLD＜＝	$S_1 \leqq S_2$	$S_1 > S_2$
280	FLD＞＝	$S_1 \geqq S_2$	$S_1 < S_2$

Example

- When the floating point number of register D200 (D201) is less than or equal to F1.2, and X1 activated, contact Y21 will be activated and remain in that state.

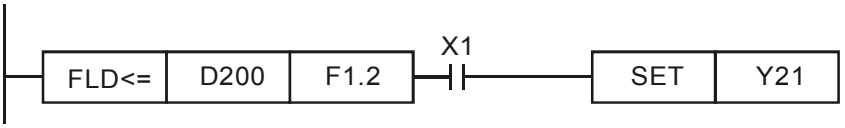

API 281~286		**FAND※**		(S1) (S2)	Floating point number contact form compare AND*

	Bit device			Word device							
	X	Y	M	K	H	KnX	KnY	KnM	T	C	D
S1									*	*	*
S2									*	*	*

Notes on operand usage: #：&、|、^
Please refer to the function specifications table for each device in series for the scope of device usage

16-bit command

–	–	–	–

32-bit command (9 STEP)

FAND※	Continuous execution type	–	–

Flag signal: none

Explanation

- **S_1**: data source device 1. **S_2**: data source device 2.
- This command compares the content of **S_1** and **S_2**. Taking "FAND=" as an example, if the result of comparison is "equal," this command will be activated; but it will not be activated when the result is "unequal."
- The FAND* command can directly input floating point numerical values (for instance: F1.2) to the **S_1**, **S_2** operands, or store floating-point numbers in register D for use in operations.
- This command can be used while directly connected with the busbar

API No.	32-bit commands	Conditions for activation	Conditions for inactivation
281	FAND	$S_1 = S_2$	$S_1 \neq S_2$
282	FAND＞	$S_1 > S_2$	$S_1 \leqq S_2$
283	FAND＜	$S_1 < S_2$	$S_1 \geqq S_2$
284	FAND＜＞	$S_1 \neq S_2$	$S_1 = S_2$
285	FAND＜＝	$S_1 \leqq S_2$	$S_1 > S_2$
286	FAND＞＝	$S_1 \geqq S_2$	$S_1 < S_2$

Example

- When X1=Off, and the floating point number in register D100 (D101) is not equal to F1.2, Y21=On and remains in that state.

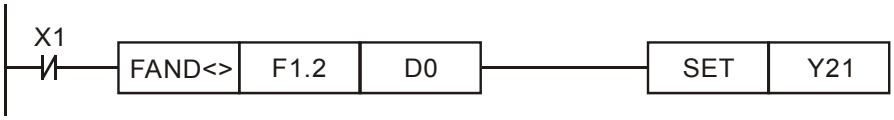

API 287~292		**FOR※**		(S1) (S2)	Floating point number contact form compare OR*

	Bit device			Word device							
	X	Y	M	K	H	KnX	KnY	KnM	T	C	D
S1									＊	＊	＊
S2									＊	＊	＊

Notes on operand usage: #：&、|、^
Please refer to the function specifications table for each device in series for the scope of device usage

16-bit command

—	—	—	—

32-bit command (9 STEP)

FOR※	Continuous execution type	—	—

Flag signal: none

Explanation

- ◆ S_1: data source device 1. S_2: data source device 2.
- ◆ This command compares the content of S_1 and S_2. Taking "FOR=" as an example, if the result of comparison is "equal," this command will be activated; but it will not be activated when the result is "unequal."
- ◆ The FOR* command can directly input floating point numerical values (for instance: F1.2) to the S_1, S_2 operands, or store floating-point numbers in register D for use in operations.
- ◆ This command can be used while directly connected with the busbar

API No.	32-bit commands	Conditions for activation	Conditions for inactivation
287	FOR＝	$S_1 = S_2$	$S_1 \neq S_2$
288	FOR＞	$S_1 > S_2$	$S_1 \leqq S_2$
289	FOR＜	$S_1 < S_2$	$S_1 \geqq S_2$
290	FOR＜＞	$S_1 \neq S_2$	$S_1 = S_2$
291	FOR＜＝	$S_1 \leqq S_2$	$S_1 > S_2$
292	FOR＞＝	$S_1 \geqq S_2$	$S_1 < S_2$

Example

- ◆ When X2 and M30 are both equal to "On," or the floating point number in register D100 (D101) is greater than or equal to F1.234, M60=On.

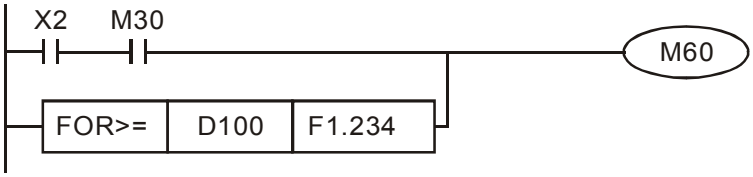

16-6-5 Detailed explanation of drive special applications commands

API 139		RPR	P	(S1) (S2)	Read servo parameter

	Bit device			Word device							
	X	Y	M	K	H	KnX	KnY	KnM	T	C	D
S1				*	*						*
S2											*

Notes on operand usage: none

16-bit command (5 STEP)			
RPR	Continuous execution type	RPRP	Pulse execution type
32-bit command			
–	–	–	–

Flag signal: none

Explanation

- (S1): Parameter address of data to be read. (S2): Register where data to be read is stored.

API 140		WPR	P	(S1) (S2)	Write servo parameter

	Bit device			Word device							
	X	Y	M	K	H	KnX	KnY	KnM	T	C	D
S1				*	*						*
S2				*	*						*

Notes on operand usage: none

16-bit command (5 STEP)			
WPR	Continuous execution type	WPRP	Pulse execution type
32-bit command			
–	–	–	–

Flag signal: none

Explanation

- (S1): Data to write to specified page. (S2): Parameter address of data to be written.

Example

- When the data in the M300 drive's parameter H01.00 is read and written to D0, data from H01.01 will be read and written to D1.
- When M0=On, the content of D10 will be written to the M300 drive Pr. 04.00 (first speed of multiple speed levels).
- When the parameter has been written successfully, M1017=On.
- The M300's WPR command does not support writing to the 20XX address, but the RPR command supports reading of 21XX, 22XX.

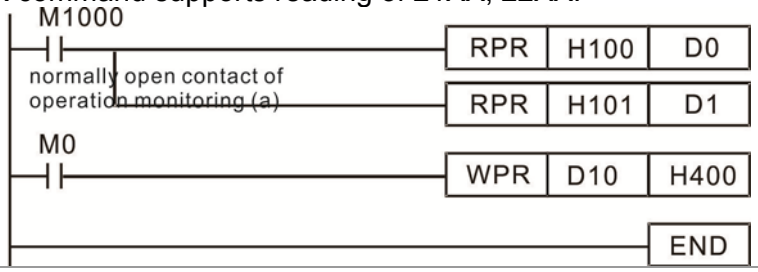

Recommendation Take care when using the WPR command. When writing parameters, because most parameters are recorded as they are written, these parameters may only be revised 109 times; a memory write error may occur if parameters are written more than (MS)10^6 or (MH)10^9 times.

Calculation of the number of times written is based on whether the written value is modified. For instance, writing the same value 100 times at the same time counts as writing only once.

API 141		**FPID**	**P**	(S1) (S2) (S3) (S4)	Drive PID control mode

	Bit device			Word device							
	X	Y	M	K	H	KnX	KnY	KnM	T	C	D
S1				*	*						*
S2				*	*						*
S3				*	*						*
S4				*	*						*

Notes on operand usage: none

16-bit command (9 STEP)			
FPID	Continuous execution type	FPIDP	Pulse execution type
32-bit command			
—	—	—	—

Flag signal: none

Explanation

- (S1): PID reference target value input terminal select. (S2): PID function proportional gain P. (S3): PID function integral time I. (S4): PID function differential time D.
- The FPID command can directly control the drive's feedback control of PID Pr. 08-00 PID reference target value input terminal selection, 08-01 proposal gain P, 08-02 integral time I, and 08-03 differential time D.

Example

- When M0=On, the set PID reference target value input terminal selection is 0 (no PID function), the PID function proportional gain P is 0, the PID function integral time I is 1 (units: 0.01 sec.), and the PID function differential time D is 1 (units: 0.01 sec.).
- When M1=On, the set PID reference target value input terminal selection is 0 (no PID function), the PID function proportional gain P is 1 (units: 0.01), the PID function integral time I is 0, and the PID function differential time D is 0.
- When M2=On, the set PID reference target value input terminal selection is 1 (target frequency input is controlled from the digital keypad), the PID function proportional gain P is 1 (units: 0.01), the PID function integral time I is 0, and the PID function differential time D is 0.
- D1027: Frequency command after PID operation.

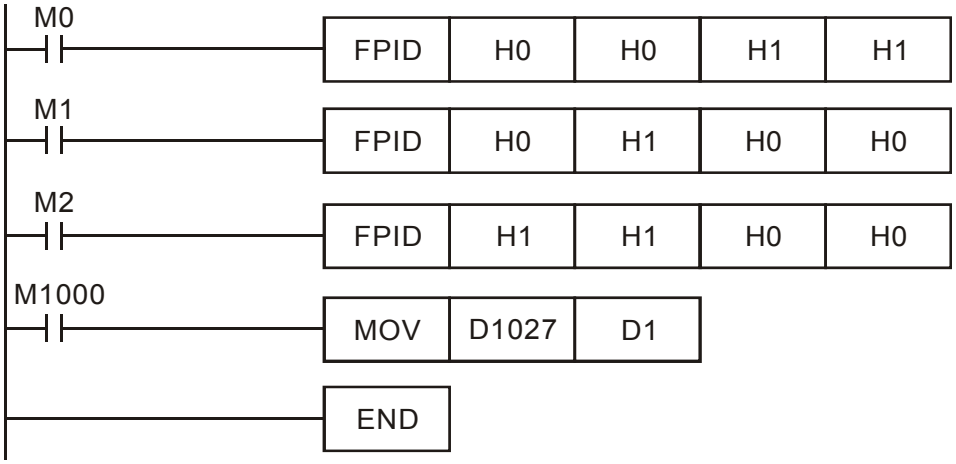

API 142		**FREQ**	**P**	(S1) (S2) (S3)	Drive speed control mode

	Bit device			Word device							
	X	Y	M	K	H	KnX	KnY	KnM	T	C	D
S1				*	*						*
S2				*	*						*
S3				*	*						*

Notes on operand usage: none

16-bit command (7 STEP)			
FREQ	Continuous execution type	FREQP	Pulse execution type
32-bit command			
—	—	—	—

Flag signal: M1015

Explanation

- (S1): Frequency command. (S2): Acceleration time. (S3): Deceleration time
- S2,S3: In acceleration/deceleration time settings, the number of decimal places is determined by the definitions of Pr01-45.

Example
When 01-45=0: units of 0.01 sec.
The setting of 50 for S2 (acceleration time) in the ladder diagram below implies 0.5 sec, and the S3 (deceleration time) setting of 60 implies 0.6 sec

- The FREQ command can control drive frequency commands, and acceleration and deceleration time; it also uses special register control actions, such as:

M1025: Control drive RUN(On)/STOP(Off) (RUN requires Servo On (M1040 On) to be effective)
M1026: Control drive operating direction FWD(Off)/REV(On)
M1040: Control Servo On/Servo Off.
M1042: Trigger quick stop (ON)/does not trigger quick stop (Off).
M1044: Pause (On)/release pause (Off)
M1052: Lock frequency (On)/release lock frequency (Off)

Example

- M1025: Drive RUN(On)/STOP(Off), M1026: drive operating direction FWD(Off)/REV(On). M1015: frequency reached.
- When M10=On, sets the drive frequency command K300(3.00Hz), with an acceleration/deceleration time of 0.
  When M11=On, sets the drive frequency command K3000 (30.00Hz), with an acceleration time of 50 (0.5 sec.) and deceleration time of 60 (0.6 sec.). (When 01-45=0)
- When M11=Off, the drive frequency command will now change to 0

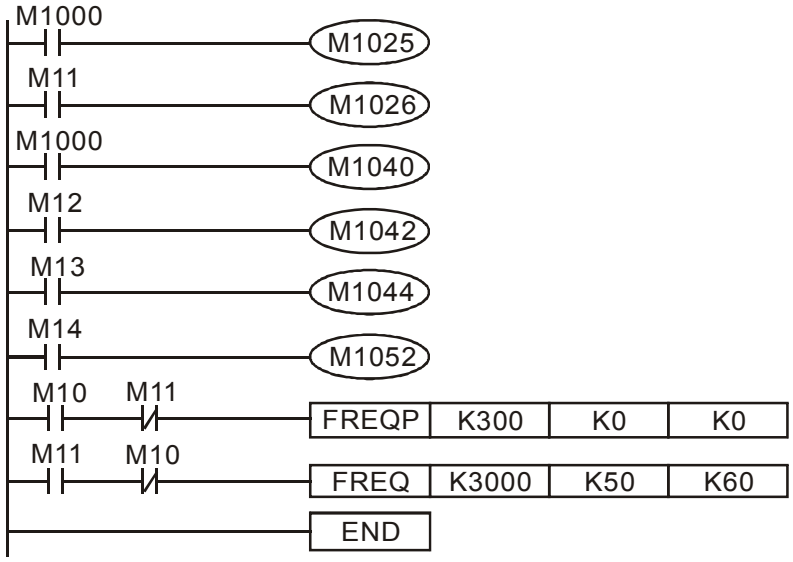

- Pr. 09-33 are defined on the basis of whether reference commands have been cleared before PLC operation

Bit 0 : Prior to PLC scanning procedures, whether the target frequency has been cleared is 0. (This will be written to the FREQ command when the PLC is On)

Bit 1 : Prior to PLC scanning procedures, whether the target torque has been cleared is 0. (This will be written to the TORQ command when the PLC is On)

Bit 2 : Prior to PLC scanning procedures, whether speed limits in the torque mode have been cleared is 0. (This will be written to the TORQ command when the PLC is On)

Example: When using r to write a program,

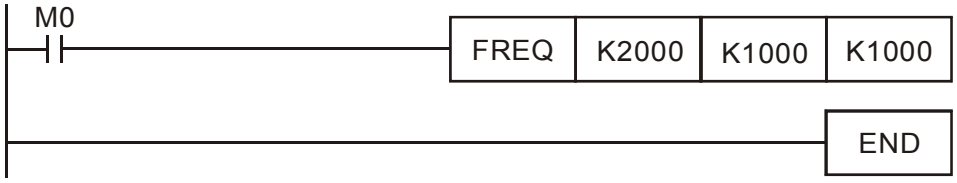

if we force M0 to be 1, the frequency command will be 20.00 Hz; but when M0 is set as 0, there will be a different situation.

Case 1: When the 09-33 bit 0 is 0, and M0 is set as 0, the frequency command will remain at 20.00Hz.

Case 2: When the 09-33 bit 0 is 1, and M0 is set as 0, the frequency command will change to 0.00Hz

The reason for this is that when the 09-33 bit 0 is 1 prior to PLC scanning procedures, the frequency will first revert to 0.

When the 09-33 bit 0 is 0, the frequency will not revert to 0.

16-7 Error display and handling

Code	ID	Descript	Recommended handling approach
PLod	50	Data writing memory error	Check whether the program has an error and download the program again
PLSv	51	Data write memory error during program execution	Restart power and download the program again
PLdA	52	Program transmission error	Try uploading again; if the error persists, sent to the manufacturer for service
PLFn	53	Command error while downloading program	Check whether the program has an error and download the program again
PLor	54	Program exceeds memory capacity or no program	Restart power and download the program again
PLFF	55	Command error during program execution	Check whether the program has an error and download the program again
PLSn	56	Check code error	Check whether the program has an error and download the program again
PLEd	57	Program has no END stop command	Check whether the program has an error and download the program again
PLCr	58	MC command has been used continuously more than nine times	Check whether the program has an error and download the program again
PLdF	59	Download program error	Check whether the program has an error and download again
PLSF	60	PLC scan time excessively long	Check whether the program code has a writing error and download again

*ID: Warning code

16-8 Explanation of PLC speed mode controls

Register table for speed mode:

Control special M

Special M	Description of Function	Attributes
M1025	Drive frequency = set frequency (ON)/drive frequency =0 (OFF)	RW
M1026	Drive operating direction FWD(OFF)/REV(ON)	RW
M1040	Hardware power (Servo On)	RW
M1042	Quick stop	RW
M1044	Pause (Halt)	RW
M1052	Lock frequency (lock, frequency locked at the current operating frequency)	RW

Status special M

Special M	Description of Function	Attributes
M1015	Frequency attained (when used together with M1025)	RO
M1056	Servo On Ready	RO
M1058	On Quick Stopping	RO

Control special D

Special D	Description of Function	Attributes
D1060	Mode setting (speed mode is 0)	RW

Status special D

Special D	Description of Function	Attributes
D1037	Drive output frequency (0.00~600.00)	RO
D1050	Actual operating mode (speed mode is 0)	RO

Speed mode control commands:

FREQ(P)	S1	S2	S3
	Target speed	The first acceleration time setting	The first deceleration time setting

Example of speed mode control:

Before performing speed control, if the FOC (magnetic field orientation) control method is used, setting of electromechanical parameters must first be completed.

1. Setting D1060 = 0 will shift the drive to the speed mode (default).
2. Use the FREQ command to control frequency, acceleration time, and deceleration time.
3. Set M1040 = 1, the drive will now be excited, but the frequency will be 0.
4. Set M1025 = 1, the drive frequency command will now jump to the frequency designated by FREQ, and acceleration/deceleration will be controlled on the basis of the acceleration time and deceleration time specified by FREQ.
5. M1052 can be used to lock the current operating frequency.

6. M1044 can be used to temporarily pause operation, and the deceleration method will comply with deceleration settings.
7. M1042 can be used to perform quick stop, and deceleration will be as quick as possible without giving rise to an error. (There may still be a jump error if the load is too large.)
8. Control user rights: M1040(Servo ON) > M1042(Quick Stop) >M1044(Halt) >M1052(LOCK)

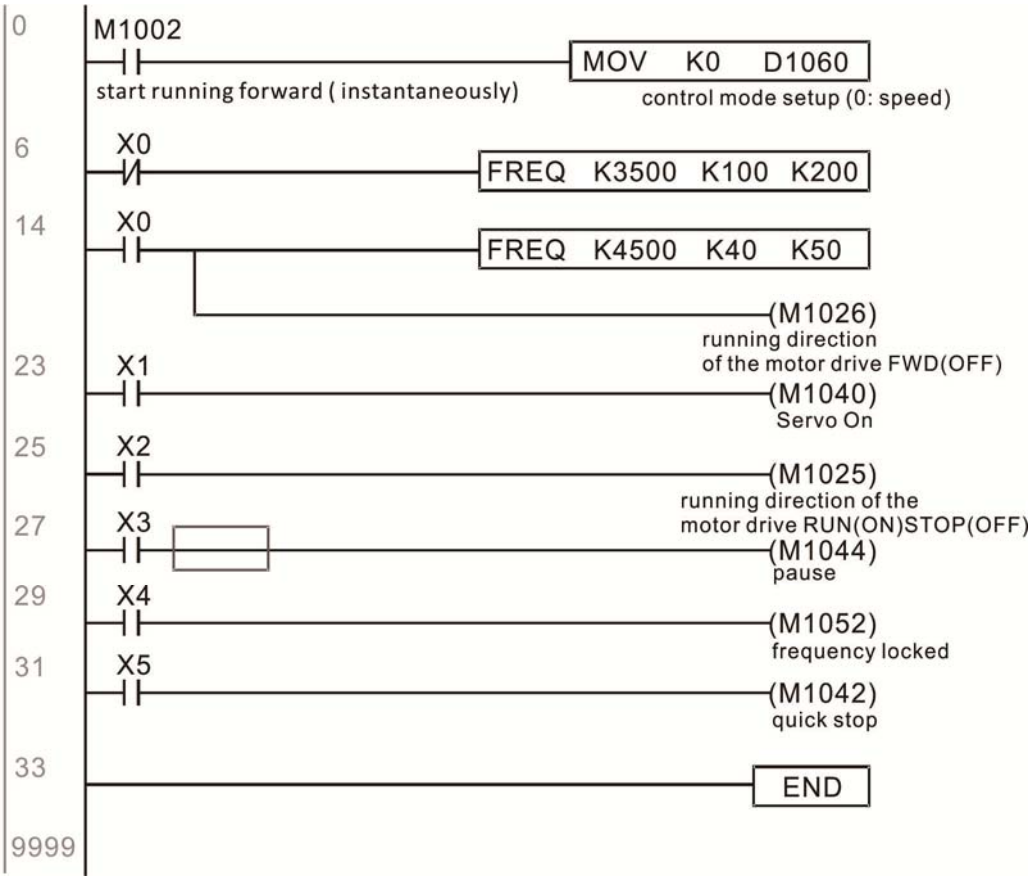

16-9 Count function using pulse input

16-9-1 High-speed count function

The MS300's MI7 supports one-way pulse counting, and the maximum speed is 33K. The starting method is very simple, and only requires setting M1038 to begin counting. The 32 bit count value is stored on D1054 and D1055 in non-numerical form. M1039 can reset the count value to 0.

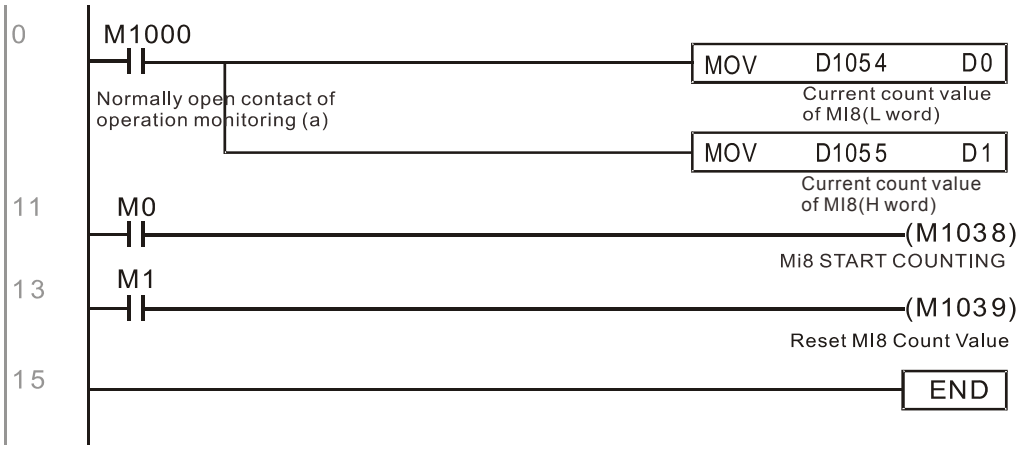

※ When the PLC program defines MI7 for use as a high-speed counter, and also for use in PLC procedures, it must be written to M1038 or M1039, and the original MI8 functions will be disabled.

16-9-2 Frequency calculation function

Apart from high-speed counting, the MS300's MI7 can also convert a received pulse to frequency. The following figure shows that there is no conflict between frequency conversion and count calculations, which can be performed simultaneously.

PLC speed calculation formula
D1057 Speed
D1058 Interval between calculations
D1059 Decimal places
Assuming that there are 5 input pulses each second, (see figure below) we set D1058=1000ms=1.0 sec. as the calculation interval. This enables five pulses to be sent to the drive each second.

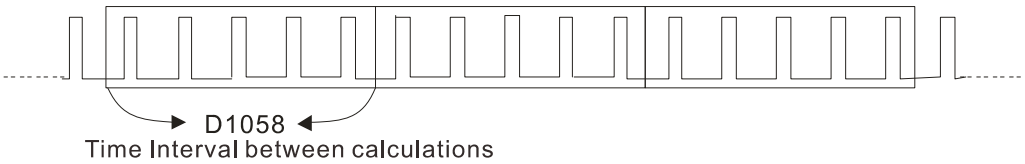

Assuming that each 5 pulses correspond to 1Hz, we set D1057=5.
Assuming that we wish to display numbers to two decimal places, we set D1059=2, which is also 1.00Hz. The numerical value displayed at D1056 is 100. For simplicity, the D1059 conversion formula can be expressed as in the following table:

$$D1058 = \frac{\text{Pulses per second}}{D1057} \times \frac{1000}{D1057} \times 10^{D1059}$$

[This page intentionally left blank]

Chapter 17 Safe Torque Off Function

17-1 The Drive Safe Function Failure Rate

17-2 Safe Torque Off Terminal Function Description

17-3 Wiring Diagram

17-4 Parameter

17-5 Operating Sequence Description

17-6 Error Code

17-1 The Drive Safe Function Failure Rate

Item	Definition	Standard	Performance
SFF	Safe torque off	IEC61508	
HFT (Type A subsystem)	Hardware fault tolerance	IEC61508	1
SIL	Safety integrity level	IEC61508	SIL 2
		IEC62061	SILCL 2
PFH	Average frequency of dangerous failure [h-1]	IEC61508	
PFDav	Probability of dangerous failure on demand	IEC61508	
Category	Category	ISO13849-1	Category 3
PL	Performance level	ISO13849-1	d
MTTFd	Mean time to dangerous failure	ISO13849-1	High
DC	Diagnostic coverage	ISO13849-1	Low

17-2 Safe Torque Off Terminal Function Description

The safety Torque Off function is to cut off the power supply to motor through the hardware, thereby, the motor couldn't produce torque.

The safety Torque Off function control the motor current drive signal by two independent hardware respectively, and thus cut off the inverter power module output in order to achieve the status of safety stop.

Operation principle Description as below table 1:

Signal	**Channel**	Photo-coupler status			
STO signal	S1~DCM	ON	ON	OFF	OFF
	S2~DCM	ON	OFF	ON	OFF
Driver Output status		Ready	STL2 mode (Torque output off)	STL1 mode (torque output off)	STO mode (Torque output off)

Table 1: Terminal operation description

- 🕮 STO means Safe Torque Off
- 🕮 STL1~STL3 means Safe Torque Off hardware abnormal.
- 🕮 STL3 means S1~DCM and S2~ DCM internal circuit detected abnormal.
- 🕮 S1~ DCM ON: means S1~ DCM has connected to a 11VDC power supply.
- 🕮 S2~ DCM ON: means S2~ DCM has connected to a 11VDC power supply.
- 🕮 S1~ DCM OFF: means S1~ DCM hasn't connected to a 5VDC power supply.
- 🕮 S2~ DCM OFF: means S2~ DCM hasn't connected to a 5VDC power supply.

17-3 Wiring Diagram

17-3-1 Internal STO circuit as below:

17-3-2 In figure 1 below, the factory setting for +24V-S1-S2 is short circuit:

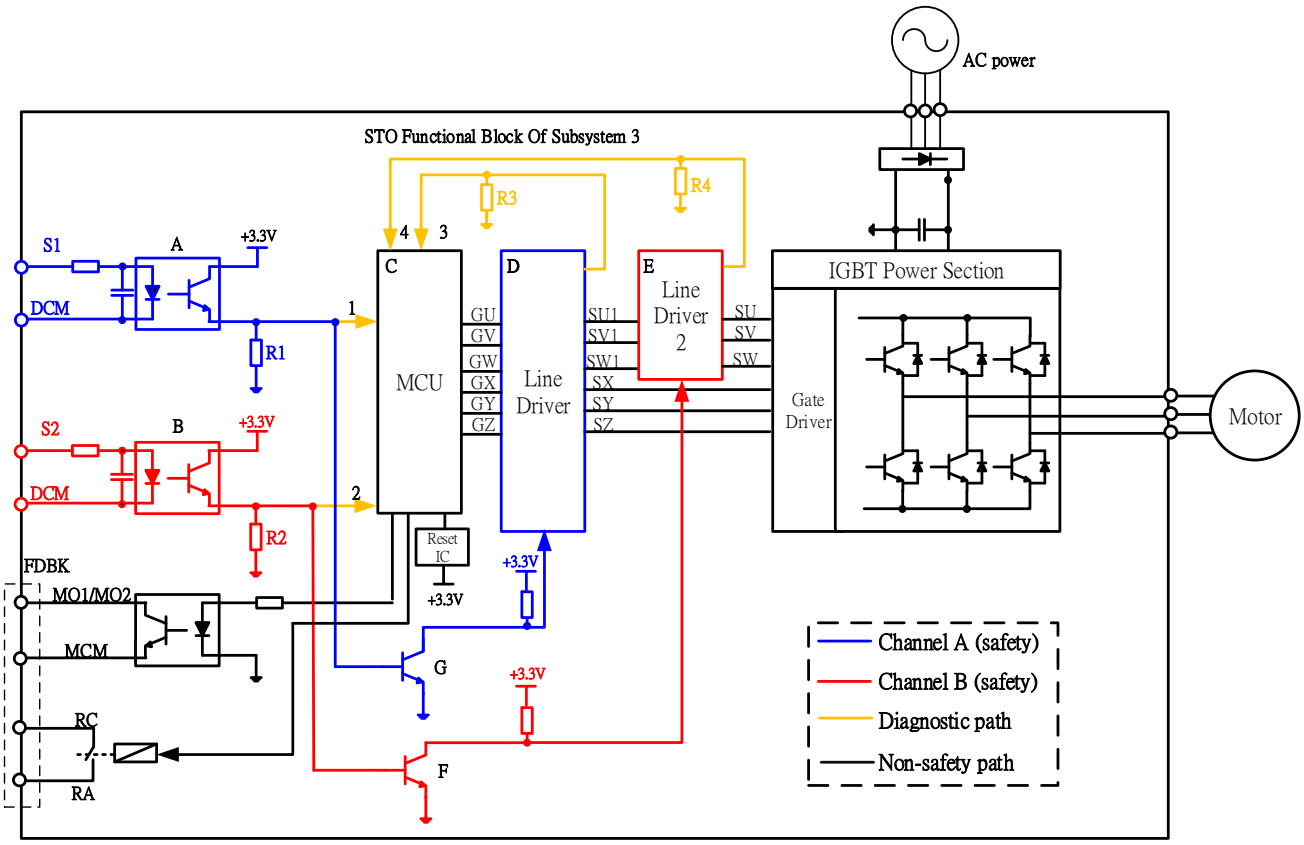

Figure 1

17-3-3 The control loop wiring diagram:

1. Remove the shot-circuit of +24V-S1-S2.
2. The wiring as below diagram. The ESTOP switch must at Close status in normal situation and drive will be able to Run.
3. STO mode, switch ESTOP open. Drive output stop and keypad display STO.

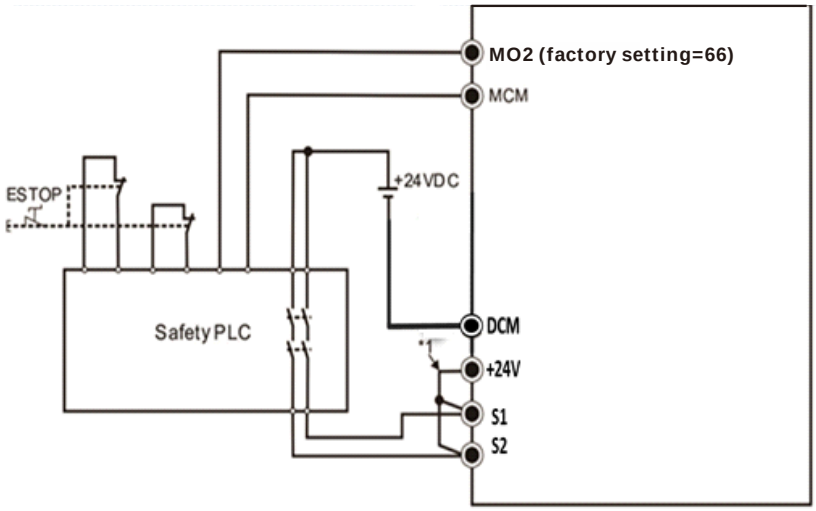

Figure 2

NOTE

*1: factory short circuit of +24V-S1-S2. To use the Safety function, please remove this short circuit.

17-4 Parameters

06-44 STO Latch Selection

Factory setting: 0

Settings 0: STO Alarm Latch
1: STO Alarm no Latch

- Pr. 06-44 = 0 STO Alarm Latch: after the reason of STO Alarm is cleared, a Reset command is need to clear STO Alarm.
- Pr. 06-44 = 1 STO Alarm no Latch: after the reason of STO Alarm is cleared, the STO Alarm will be cleared automatically.
- All of STL1~STL3 error are “Alarm latch” mode (in STL1~STL3 mode, the Pr. 06-44 function is not effective).

17-5 Operating Sequence Description

17-5-1Normal operation status

As shown in Figure 3: When the S1~DCM and S2~DCM=ON (no STO function is needed), the drive will execute “Operating” or “Output Stop” according to RUN/STOP command.

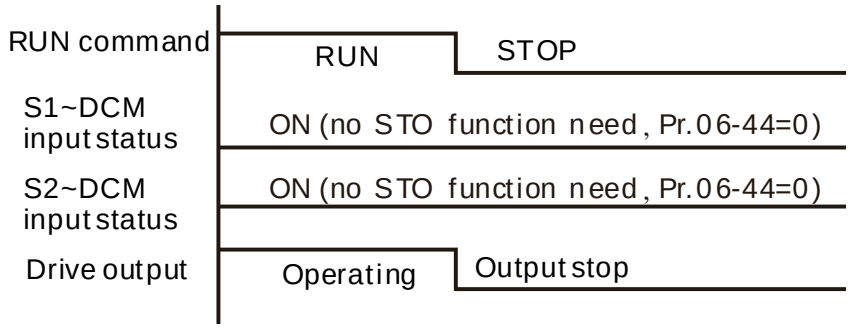

Figure 3

17-5-2-1 STO, Pr. 06-44=0, Pr. 02-35=0

As shown in Figure 4: When both of S1~DCM and S2~DCM channel has turn OFF during operating, the STO function enabling and the drive will stop output regardless of Run command is ON or OFF status.

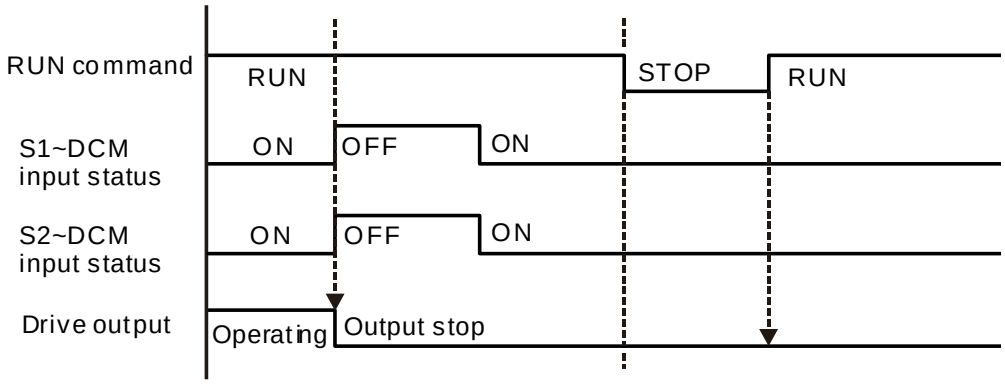

Figure 4

17-5-2-2 STO, Pr. 06-44=0, Pr. 02-35=1

As shown in Figure 5: As same as the figure 4. However, the Pr. 02-35=1, therefore, after the Reset command, if the operating command still exists, then the drive will immediately execute the run command again.

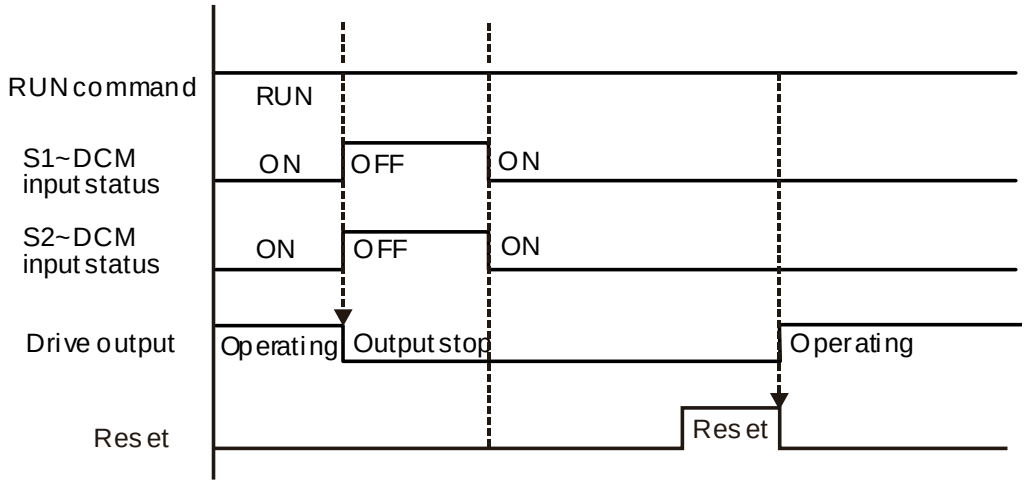

Figure 5

17-5-3 STO, Pr. 06-44=1 STO Alarm no Latch

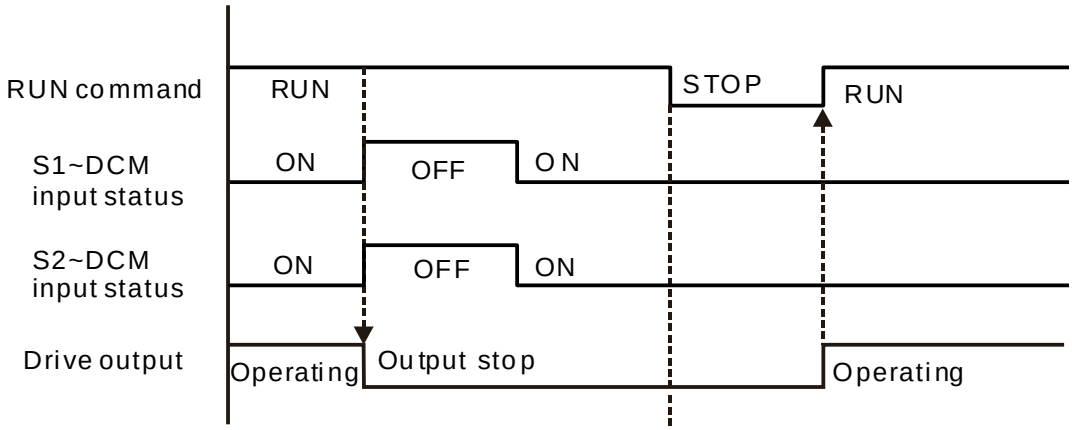

Figure 6

17-5-4 STL1

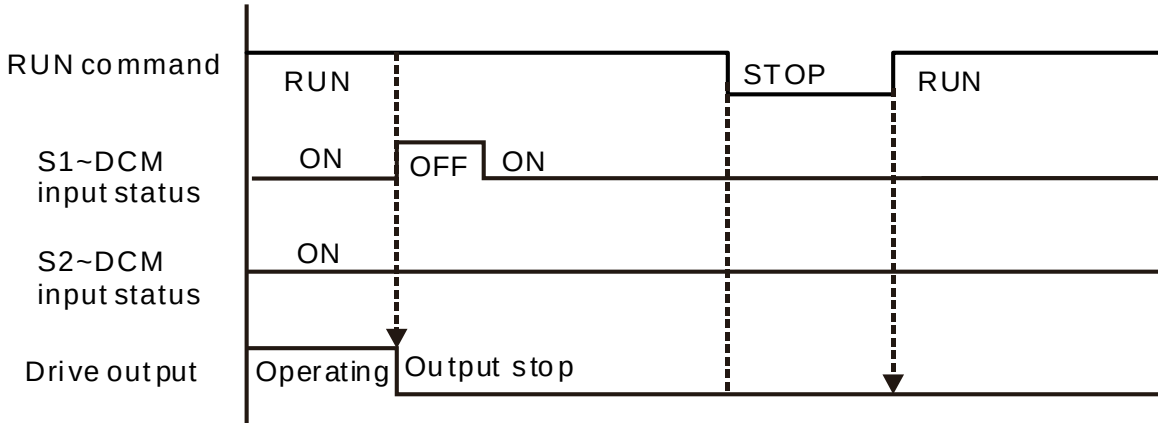

Figure 7

17-5-4 STL2

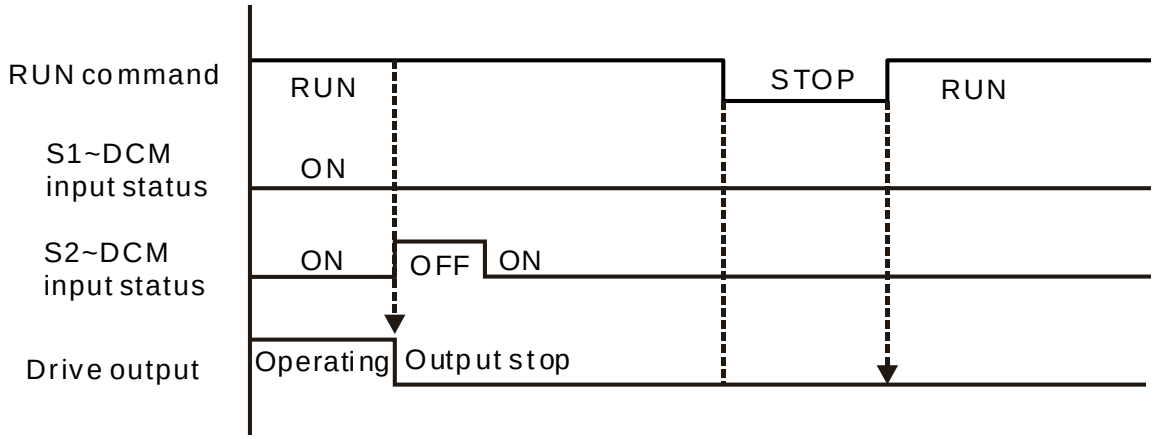

Figure 8

17-6 Error Code

06-17	Fault Record 1
06-18	Fault Record 2
06-19	Fault Record 3
06-20	Fault Record 4
06-21	Fault Record 5
06-22	Fault Record 6

Settings
72: Channel 1 (S1~DCM) safety loop error (STL1)
76: Safety torque off
77: Channel 2 (S2~DCM) safety loop error (STL2)
78: Internal loop error (STL3)

Error code	Name	Description
76 (STO)	Safety torque off	Safety Torque Off function active
72 (STL1)	Channel 1 (S1~DCM) safety loop error	S1~DCM internal loop detect error
77 (STL2)	Channel 2 (S2~DCM) safety loop error	S2~DCM internal loop detect error
78 (STL3)	Internal loop error	S1~DCM and S2~DCM internal loop detect error